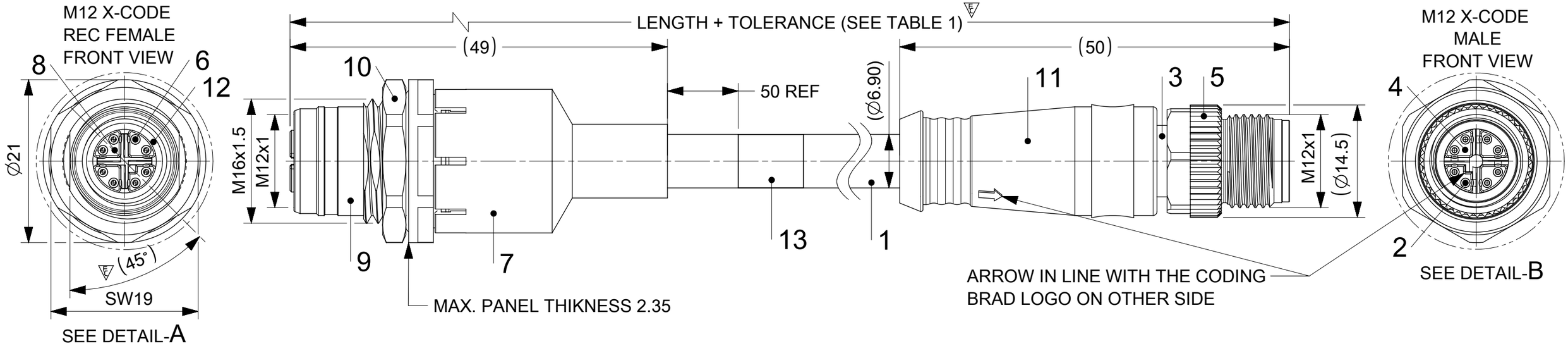

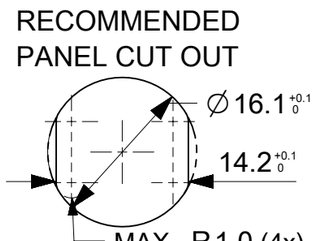

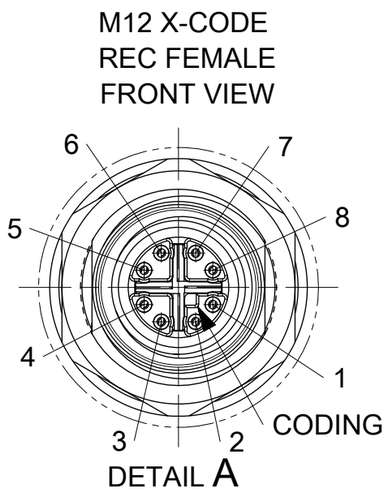

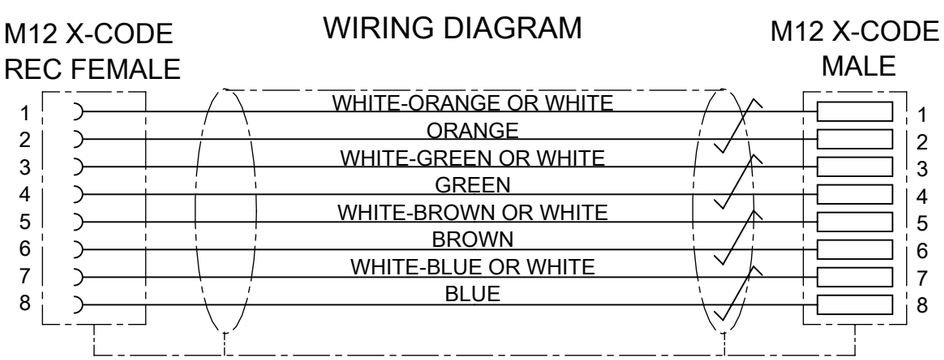

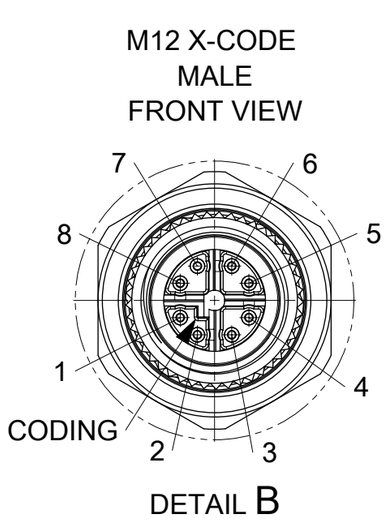

NOTES:
VOLTAGE RATING: 48 V
CURRENT RATING: 0.5 A
TEMPERATURE RATING:
STATIC: -40 °C TO 80 °C
DYNAMIC: -20 °C TO 80 °C
IP RATING: IP 67 (IN MATED AND LOCKED CONDITION)
TRANSMISSION CHARACTERISTICS ACCORDING TO ISO/IEC 11801 CLASS E_A CHANNEL,
WITH INSERTION LOSS BEING IGNORED FOR CABLE LENGTHS ≤1 m OR ≥65 m
PACKAGING: CORDSETS ARE PACKED IN A POLYBAG

BILL OF MATERIAL

ITEM	QTY	DESCRIPTION	MATERIAL	FINISH/COLOR
1	1	CABLE 4X2X26/7AWG DIA 6.9	PUR	GREEN
2	8	CONTACT M12 XC MA	BRASS	Au PLATED
3	1	SHIELD SLEEVE MA	Zn DIE-CAST	Ni PLATED
4	1	INSERT M12 XC MA	PA	BLACK
5	1	M12 HYBRID COUPLING NUT	BRASS	Ni PLATED
6	8	CONTACT M12 XC FE	BRASS	Au PLATED
7	2	SHIELD SLEEVE FE	Zn	Ni PLATED
8	1	INSERT M12 XC FE	PA	BLACK
9	1	SHELL M12 XC FE	BRASS	Ni PLATED
10	1	LOCKNUT	BRASS	Ni PLATED
11	-	OVERMOLD	TPU	BLACK
12	1	O-RING	FPM	RED
13	1	LABEL2.0X1.75	VINYL	YELLOW

DOCUMENT STATUS | P1 | RELEASE DATE | 2022/01/25 10:26:22

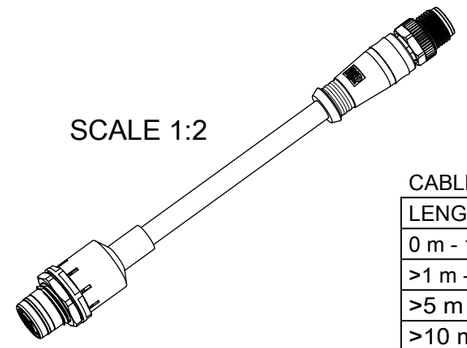

CABLE LENGTH TOLERANCES

LENGTH	TOLERANCE
0 m - 1 m	+40 mm
>1 m - 5 m	+60 mm
>5 m - 10 m	+80 mm
>10 m - 20 m	+140 mm
>20 m - 30 m	+160 mm
>30 m	+1% length

TABLE 1

Material No.	ENGINEERING NO.	DESCRIPTION	LENGTH [mm]
1203410700	ERWKEU7020M005	REC M12 CAT6A 8P XC FE STR PUR GREEN MA 0.5M	500
1203410701	ERWKEU7020M010	REC M12 CAT6A 8P XC FE STR PUR GREEN MA 1M	1000
1203410702	ERWKEU7020M020	REC M12 CAT6A 8P XC FE STR PUR GREEN MA 2M	2000
1203410703	ERWKEU7020M030	REC M12 CAT6A 8P XC FE STR PUR GREEN MA 3M	3000
1203410704	ERWKEU7020M040	REC M12 CAT6A 8P XC FE STR PUR GREEN MA 4M	4000
1203410705	ERWKEU7020M050	REC M12 CAT6A 8P XC FE STR PUR GREEN MA 5M	5000
1203411100	ERWKEU7020M060	REC M12 CAT6A 8P XC FE STR PUR GREEN MA 6M	6000
1203410706	ERWKEU7020M100	REC M12 CAT6A 8P XC FE STR PUR GREEN MA 10M	10000
1203410707	ERWKEU7020M150	REC M12 CAT6A 8P XC FE STR PUR GREEN MA 15M	15000

THIS DRAWING CONTAINS INFORMATION THAT IS PROPRIETARY TO MOLEX ELECTRONIC TECHNOLOGIES, LLC AND SHOULD NOT BE USED WITHOUT WRITTEN PERMISSION

FUNCTIONAL SYMBOLS: FA = 0, FC = 2, FB = 0
DIVISIONAL SYMBOLS

DIMENSION UNITS	SCALE
mm	2:1

GENERAL TOLERANCES (UNLESS SPECIFIED)

ANGULAR TOL	±	1.0 °
4 PLACES	±	
3 PLACES	±	
2 PLACES	±	0.05
1 PLACE	±	0.3
0 PLACES	±	0.5

DRAFT WHERE APPLICABLE MUST REMAIN WITHIN DIMENSIONS

CURRENT REV DESC: NOTE CHANGED
EC NO: 692351
DRWN: ARPITT 2022/01/19
CHK'D: RSILLER 2022/01/25
APPR: RSILLER 2022/01/25
INITIAL REVISION:
DRWN: LRAMAMURTHY 2015/12/17
APPR: RSILLER 2016/02/09

THIRD ANGLE PROJECTION | DRAWING: A3-SIZE | SERIES: 120341

molex

REC M12 CAT6A 8P AC STR PUR MA XM SHLD

PRODUCT CUSTOMER DRAWING

DOCUMENT NUMBER	DOC TYPE	DOC PART	REVISION
1203410700	PSD	000	A11

MATERIAL NUMBER	CUSTOMER	SHEET NUMBER
SEE TABLE 1	GENERAL MARKET	1 OF 1

FORMAT: master-tb-prod-A3
REVISION: J1
DATE: 2021/05/01