THIS COPY IS PROVIDED ON A RESTRICTED BASIS AND IS NOT TO BE USED IN ANY WAY DETRIMENTAL TO THE INTERESTS OF PANDUIT CORP.

PANDUIT PART NUMBER	WEIGHT
FR12TRBE58 FR12TRBE58M	2.45 LB/EACH (1109g/EACH)

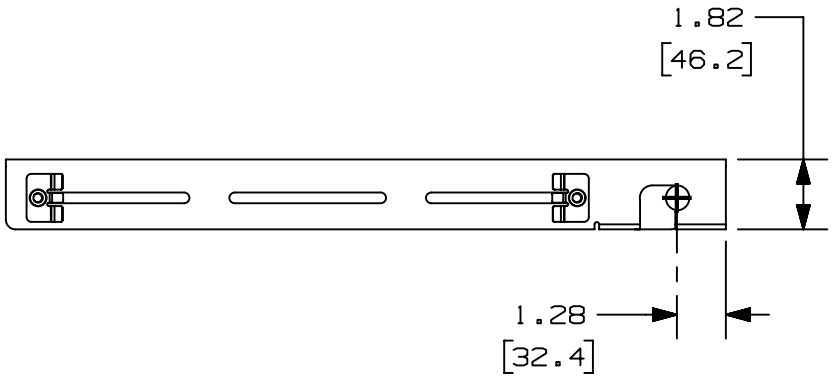

NOTES:

1. SEE CURRENT CATALOG FOR ADDITIONAL PART SUFFIXES TO INDICATE PACKAGE QUANTITY.
2. THE FIBERRUNNER 12x4 QUIKLOCK EXISTING THREADED ROD BRACKET IS USED TO SUPPORT THE FIBERRUNNER 12x4 CABLE ROUTING SYSTEM FROM A SECTION OF EXISTING 5/8" (M16) THREADED ROD.
3. THE FIBERRUNNER 12x4 QUIKLOCK EXISTING THREADED ROD BRACKET INCLUDES:
   ONE (1) BRACKET ASSEMBLY,
   TWO (2) 5/8-11 SPLIT LOCK NUTS (FR12TRBE58 ONLY),
   TWO (2) M16x2 SPLIT LOCK NUTS (FR12TRBE58M ONLY),
   ONE (1) 1/4-20 T-BOLT,
   ONE (1) 1/4-20 HEX KEPS NUT
4. FINISH COLOR: BLACK (EXCEPT HARDWARE)
5. DIMENSIONS IN PARENTHESES ARE IN METRIC.

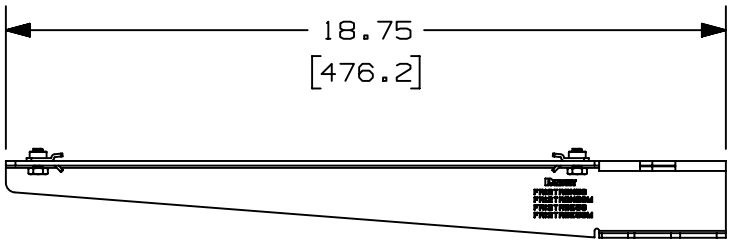

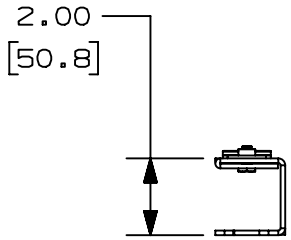

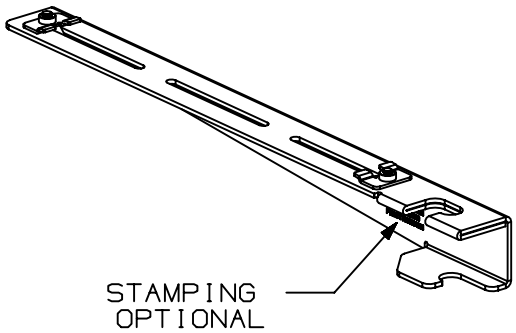

REV	DATE	BY	CHK	APR	DESCRIPTION	ECN
01B	9/10/19	MEX-JAGC	FWI	FWI	G. "STAMPING OPTIONAL" LABEL ADDED SEE PREVIOUS REVISION FOR HISTORY	V09002CN/07

TITLE
FIBERRUNNER 12x4 QUIKLOCK EXISTING THREADED ROD BRACKET – 5/8" (M16) THREADED ROD

CUSTOMER DRAWING

ITEM REVISION NAME: D37797CQ/01

DATASET FILE NAME: D37797CQ_DC/01B

PANDUIT

MATERIAL: N/A

THIRD ANGLE PROJECTION

DRAWING NUMBER: 37797-45

DRAWN BY	DATE	CHK	SCALE		SIZE
JHNU	5/15/01	CFG	NONE	SHT 1 OF 1	A

D10100DA/20