CKT SIZE	DIM A	DIM B	DIM C	DIM D
2	.165 (4.20)	.378 (9.60)	.520 (13.20)	.772 (19.60)
4	.496 (12.60)	.709 (18.00)	.850 (21.60)	1.102 (28.00)
5	.661 (16.80)	.874 (22.20)	1.016 (25.80)	1.268 (32.20)
6	.827 (21.00)	1.039 (26.40)	1.181 (30.00)	1.433 (36.40)
7	.992 (25.20)	1.205 (30.60)	1.346 (34.20)	1.598 (40.60)
8	1.157 (29.40)	1.370 (34.80)	1.512 (38.40)	1.764 (44.80)
9	1.323 (33.60)	1.535 (39.00)	1.677 (42.60)	1.929 (49.00)
10	1.488 (37.80)	1.701 (43.20)	1.843 (46.80)	2.094 (53.20)
11	1.654 (42.00)	1.866 (47.40)	2.008 (51.00)	2.260 (57.40)
12	1.819 (46.20)	2.031 (51.60)	2.173 (55.20)	2.425 (61.60)

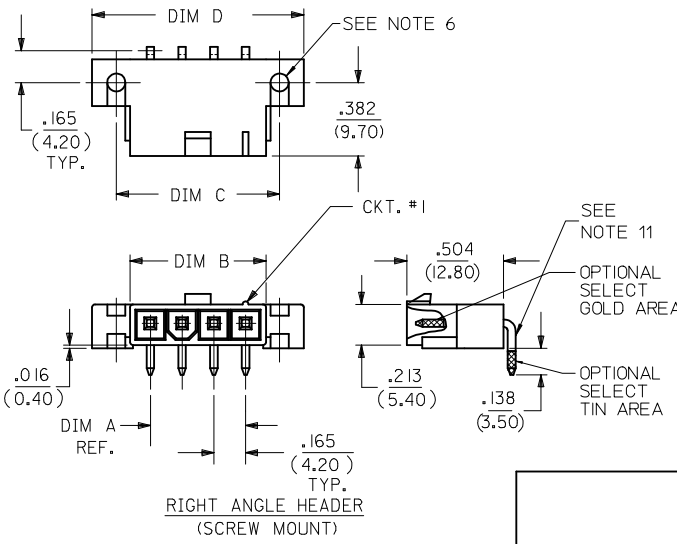

RIGHT ANGLE HEADER
(SCREW MOUNT)

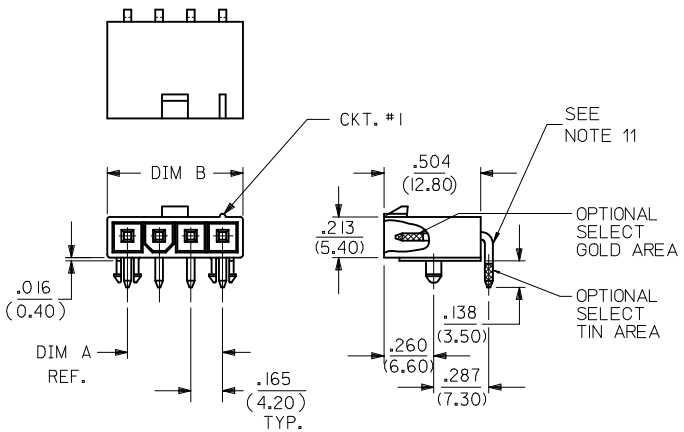

RIGHT ANGLE HEADER
(PEG MOUNT)

172648 - * * **

PLATING
SEE NOTE 2
0 = TIN
1 = GOLD

ASSEMBLY TYPE
1 = SINGLE ROW W/PEGS
POSITIVE LOCK
2 = SINGLE ROW W/SCREW MOUNT
POSITIVE LOCK

CIRCUIT SIZE

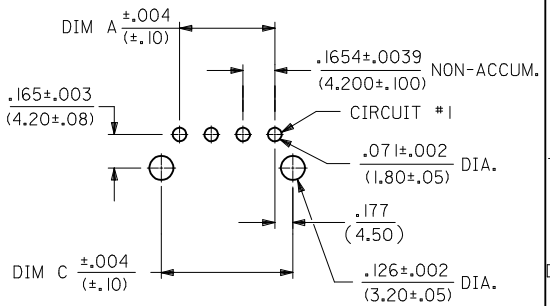

RECOMMENDED HOLE LAYOUT FOR
.070/(1.78) MAX. THICK P.C. BOARD
VIEWED FROM COMPONENT SIDE

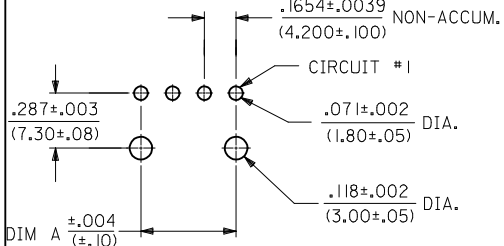

RECOMMENDED HOLE LAYOUT FOR
.070/(1.78) MAX. THICK P.C. BOARD
VIEWED FROM COMPONENT SIDE
4-12 CIRCUIT PART

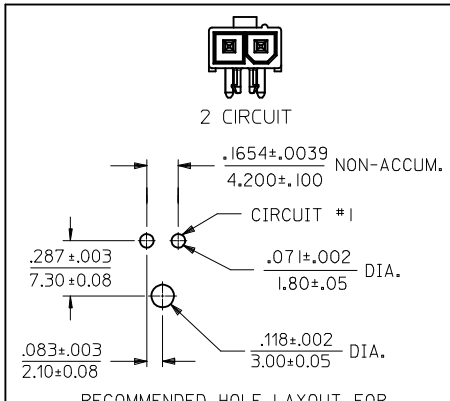

RECOMMENDED HOLE LAYOUT FOR
.070/ 1.78 MAX. THICK P.C. BOARD
VIEWED FROM COMPONENT SIDE
2 CIRCUIT PART

NOTES:
1) MATERIAL:
HOUSING:
UNFILLED NYLON, UL94V-2, IEC 60335-1,
5TH EDITION GLOW WIRE CAPABLE, COLOR - BLACK.
TERMINAL:
BRASS ALLOY
2) FINISH (PLATING):
GOLD = .000030/(0.00076) MIN. SELECT GOLD OVER
.000100/(0.00254) MIN.SELECT MATTE TIN
OVER .000050/(0.00127) MIN. NICKEL OVERALL
TIN = .000100/(0.00254) MIN. MATTE TIN OVER
.000050/(0.00127) MIN. NICKEL OVERALL
3) PRODUCT SPECIFICATION: PS-5556-001
4) PACKAGING SPECIFICATION: BULK PACK PER PK-5569-002
TRAY PACK PER PK-5569-005
5) PART MATES WITH MINI-FIT JR. RECEPTACLE SERIES 46994.
6) SCREW MOUNT PARTS ARE DESIGNED FOR USE WTH #4 OR
M3 SELF TAPPING SCREWS.
7) DISCOLORATION IN THE BANDOLIER CARRIER AREA OF THE PIN IS
INHERENT TO THE PLATING PROCESS AND IS DUE TO THE MASKING
EFFECT OF THE CARRIER. THIS DISCOLORATION IS IN A NON-FUNCTIONAL
AREA OF THE PIN AND WILL NOT AFFECT THE PERFORMANCE OF THE
HEADER ASSEMBLY.
8) CONNECTORS ARE NOT TO BE MATED AND UNMATED WHILE CIRCUITS ARE LIVE.
9) PARTS ARE NOT DESIGNED FOR CURRENT SHARING.
10) PART CONFORMS TO CLASS "B" REQUIREMENTS OF COSMETIC
SPECIFICATION PS-45499-002, WITH THE EXCEPTION OF DISCOLORATION,
FLASH AND SINK MEET CLASS "C" REQUIREMENTS.
11) FORMING MARKS ON PINS ARE ACCEPTABLE.

PART NUMBER	CKT SIZE	MOUNTING OPTION	PLATING SEE NOTE 2	PACKAGING
172648-0102	2	PEG	TIN	TRAY
172648-0104	4			BULK
172648-0105	5			
172648-0106	6			TRAY
PART NUMBER	CKT SIZE	MOUNTING OPTION	PLATING SEE NOTE 2	PACKAGING
172648-1102	2	PEG	GOLD	TRAY
172648-1104	4			BULK
172648-1105	5			
172648-1106	6			TRAY

ADD 2 CKT VIEW 2017/06/26
EC NO: UCP2017-2789 2017/06/26
DRWN:BAPPELDORN CHK'D:JBELL 2017/06/28
APPR:FSMITH
DESCRIPTION
A2
REV

QUALITY SYMBOLS
E =0
F =0
P =0

GENERAL TOLERANCES (UNLESS SPECIFIED)

	mm	INCH
4 PLACES	± ---	± ---
3 PLACES	± ---	± .015
2 PLACES	± .38	± ---
1 PLACE	± ---	± ---
0 PLACE	± ---	± ---
ANGULAR ± 3 °		

DRAFT WHERE APPLICABLE MUST REMAIN WITHIN DIMENSIONS

DIMENSION STYLE: IN/MM
SCALE: 2:1
DESIGN UNITS: METRIC
THIRD ANGLE PROJECTION

DRAWN BY	NNGUYEN	DATE 2014/04/11
CHECKED BY	JBELL	DATE 2014/04/11
APPROVED BY	FSMITH	DATE 2014/05/16
MATERIAL NO.	SEE CHART	

TITLE: MINI-FIT JR RIGHT ANGLE HEADER ASSEMBLY SINGLE ROW, GLOW WIRE

molex

DOCUMENT NO. SD-172648-0000
SHEET NO. 1 OF 1

SIZE C

THIS DRAWING CONTAINS INFORMATION THAT IS PROPRIETARY TO MOLEX INCORPORATED AND SHOULD NOT BE USED WITHOUT WRITTEN PERMISSION

CKT SIZE	DIM A	DIM B	DIM C	DIM D
2	.165 (4.20)	.378 (9.60)	.520 (13.20)	.772 (19.60)
4	.496 (12.60)	.709 (18.00)	.850 (21.60)	1.102 (28.00)
5	.661 (16.80)	.874 (22.20)	1.016 (25.80)	1.268 (32.20)
6	.827 (21.00)	1.039 (26.40)	1.181 (30.00)	1.433 (36.40)
7	.992 (25.20)	1.205 (30.60)	1.346 (34.20)	1.598 (40.60)
8	1.157 (29.40)	1.370 (34.80)	1.512 (38.40)	1.764 (44.80)
9	1.323 (33.60)	1.535 (39.00)	1.677 (42.60)	1.929 (49.00)
10	1.488 (37.80)	1.701 (43.20)	1.843 (46.80)	2.094 (53.20)
11	1.654 (42.00)	1.866 (47.40)	2.008 (51.00)	2.260 (57.40)
12	1.819 (46.20)	2.031 (51.60)	2.173 (55.20)	2.425 (61.60)

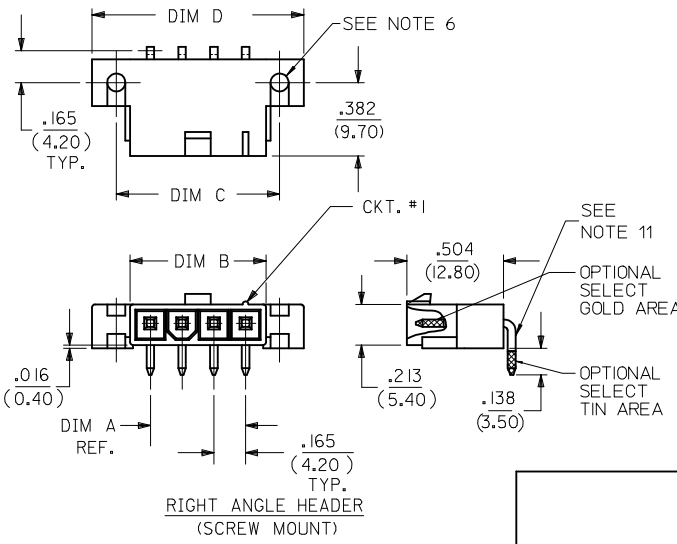

RIGHT ANGLE HEADER
(SCREW MOUNT)

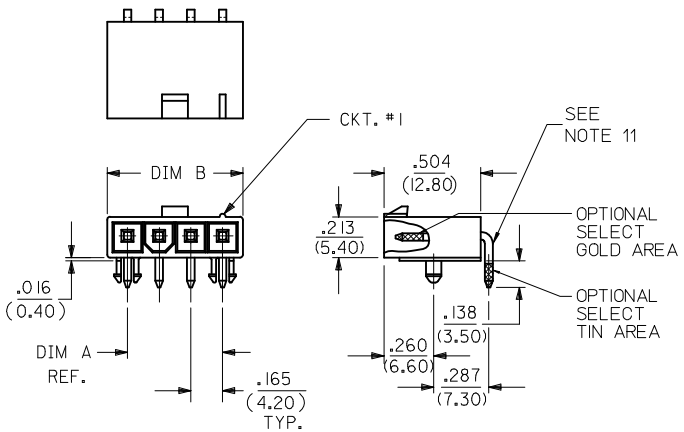

RIGHT ANGLE HEADER
(PEG MOUNT)

172648 - * * **

PLATING
SEE NOTE 2
0 = TIN
1 = GOLD

ASSEMBLY TYPE
1 = SINGLE ROW W/PEGS
POSITIVE LOCK
2 = SINGLE ROW W/SCREW MOUNT
POSITIVE LOCK

CIRCUIT SIZE

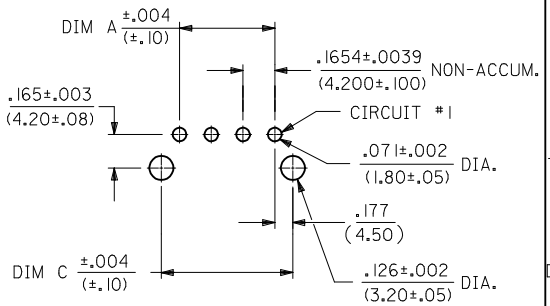

RECOMMENDED HOLE LAYOUT FOR
.070/(1.78) MAX. THICK P.C. BOARD
VIEWED FROM COMPONENT SIDE

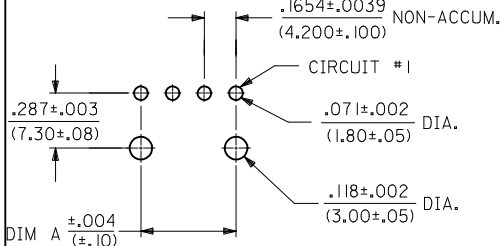

RECOMMENDED HOLE LAYOUT FOR
.070/(1.78) MAX. THICK P.C. BOARD
VIEWED FROM COMPONENT SIDE
4-12 CIRCUIT PART

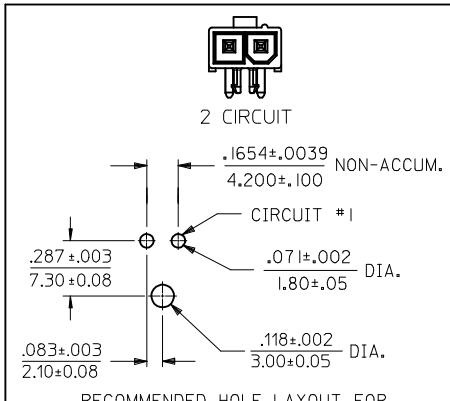

RECOMMENDED HOLE LAYOUT FOR
.070/ 1.78 MAX. THICK P.C. BOARD
VIEWED FROM COMPONENT SIDE
2 CIRCUIT PART

NOTES:
1) MATERIAL:
HOUSING:
UNFILLED NYLON, UL94V-2, IEC 60335-1,
5TH EDITION GLOW WIRE CAPABLE, COLOR - BLACK.
TERMINAL:
BRASS ALLOY
2) FINISH (PLATING):
GOLD = .000030/(0.00076) MIN. SELECT GOLD OVER
.000100/(0.00254) MIN.SELECT MATTE TIN
OVER .000050/(0.00127) MIN. NICKEL OVERALL
TIN = .000100/(0.00254) MIN. MATTE TIN OVER
.000050/(0.00127) MIN. NICKEL OVERALL
3) PRODUCT SPECIFICATION: PS-5556-001
4) PACKAGING SPECIFICATION: BULK PACK PER PK-5569-002
TRAY PACK PER PK-5569-005
5) PART MATES WITH MINI-FIT JR. RECEPTACLE SERIES 46994.
6) SCREW MOUNT PARTS ARE DESIGNED FOR USE WTH #4 OR
M3 SELF TAPPING SCREWS.
7) DISCOLORATION IN THE BANDOLIER CARRIER AREA OF THE PIN IS
INHERENT TO THE PLATING PROCESS AND IS DUE TO THE MASKING
EFFECT OF THE CARRIER. THIS DISCOLORATION IS IN A NON-FUNCTIONAL
AREA OF THE PIN AND WILL NOT AFFECT THE PERFORMANCE OF THE
HEADER ASSEMBLY.
8) CONNECTORS ARE NOT TO BE MATED AND UNMATED WHILE CIRCUITS ARE LIVE.
9) PARTS ARE NOT DESIGNED FOR CURRENT SHARING.
10) PART CONFORMS TO CLASS "B" REQUIREMENTS OF COSMETIC
SPECIFICATION PS-45499-002, WITH THE EXCEPTION OF DISCOLORATION,
FLASH AND SINK MEET CLASS "C" REQUIREMENTS.
11) FORMING MARKS ON PINS ARE ACCEPTABLE.

PART NUMBER	CKT SIZE	MOUNTING OPTION	PLATING SEE NOTE 2	PACKAGING
172648-0102	2	PEG	TIN	TRAY
172648-0104	4			BULK
172648-0105	5			
172648-0106	6			TRAY
PART NUMBER	CKT SIZE	MOUNTING OPTION	PLATING SEE NOTE 2	PACKAGING
172648-1102	2	PEG	GOLD	TRAY
172648-1104	4			BULK
172648-1105	5			
172648-1106	6			TRAY

ADD 2 CKT VIEW 2017/06/26
EC NO: UCP2017-2789 2017/06/26
DRWN:BAPPELDORN CHK'D:JBELL 2017/06/28
APPR:FSMITH
DESCRIPTION
A2
REV

QUALITY SYMBOLS
E =0
F =0
P =0

GENERAL TOLERANCES (UNLESS SPECIFIED)

	mm	INCH
4 PLACES	± ---	± ---
3 PLACES	± ---	± .015
2 PLACES	± .38	± ---
1 PLACE	± ---	± ---
0 PLACE	± ---	± ---
ANGULAR ± 3 °		

DRAFT WHERE APPLICABLE MUST REMAIN WITHIN DIMENSIONS

DIMENSION STYLE: IN/MM
SCALE: 2:1
DESIGN UNITS: METRIC
THIRD ANGLE PROJECTION

DRAWN BY	NNGUYEN	DATE 2014/04/11
CHECKED BY	JBELL	DATE 2014/04/11
APPROVED BY	FSMITH	DATE 2014/05/16
MATERIAL NO.	SEE CHART	

TITLE: MINI-FIT JR RIGHT ANGLE HEADER ASSEMBLY SINGLE ROW, GLOW WIRE

molex

DOCUMENT NO. SD-172648-0000
SHEET NO. 1 OF 1

SIZE C

THIS DRAWING CONTAINS INFORMATION THAT IS PROPRIETARY TO MOLEX INCORPORATED AND SHOULD NOT BE USED WITHOUT WRITTEN PERMISSION