AN-EVAL 2x8-ISO1I811T

ISOFACE™ Evaluation Board for galvanically isolated 8-Channel Digital Input ICs with IEC61131-2 compatible characteristics for industrial applications

ISO1I811T EVAL - Board

Application Note

V 1.2, 2011-09-09

Edition 2011-09-09

Published by
Infineon Technologies AG
81726 Munich, Germany

© 2011 Infineon Technologies AG
All Rights Reserved.

Legal Disclaimer

The information given in this document shall in no event be regarded as a guarantee of conditions or characteristics. With respect to any examples or hints given herein, any typical values stated herein and/or any information regarding the application of the device, Infineon Technologies hereby disclaims any and all warranties and liabilities of any kind, including without limitation, warranties of non-infringement of intellectual property rights of any third party.

Information

For further information on technology, delivery terms and conditions and prices, please contact the nearest Infineon Technologies Office (**www.infineon.com**).

Warnings

Due to technical requirements, components may contain dangerous substances. For information on the types in question, please contact the nearest Infineon Technologies Office.

Infineon Technologies components may be used in life-support devices or systems only with the express written approval of Infineon Technologies, if a failure of such components can reasonably be expected to cause the failure of that life-support device or system or to affect the safety or effectiveness of that device or system. Life support devices or systems are intended to be implanted in the human body or to support and/or maintain and sustain and/or protect human life. If they fail, it is reasonable to assume that the health of the user or other persons may be endangered.

Revision History	
Page or Item	**Subjects (major changes since previous revision)**
V 1.2, 2011-09-09 Updated version	

Trademarks of Infineon Technologies AG

AURIX™, C166™, CanPAK™, CIPOS™, CIPURSE™, EconoPACK™, CoolMOS™, CoolSET™, CORECONTROL™, CROSSAVE™, DAVE™, EasyPIM™, EconoBRIDGE™, EconoDUAL™, EconoPIM™, EiceDRIVER™, eupec™, FCOS™, HITFET™, HybridPACK™, I²RF™, ISOFACE™, IsoPACK™, MIPAQ™, ModSTACK™, my-d™, NovalithIC™, OptiMOS™, ORIGA™, PRIMARION™, PrimePACK™, PrimeSTACK™, PRO-SIL™, PROFET™, RASIC™, ReverSave™, SatRIC™, SIEGET™, SINDRION™, SIPMOS™, SmartLEWIS™, SOLID FLASH™, TEMPFET™, thinQ!™, TRENCHSTOP™, TriCore™.

Other Trademarks

Advance Design System™ (ADS) of Agilent Technologies, AMBA™, ARM™, MULTI-ICE™, KEIL™, PRIMECELL™, REALVIEW™, THUMB™, µVision™ of ARM Limited, UK. AUTOSAR™ is licensed by AUTOSAR development partnership. Bluetooth™ of Bluetooth SIG Inc. CAT-iq™ of DECT Forum. COLOSSUS™, FirstGPS™ of Trimble Navigation Ltd. EMV™ of EMVCo, LLC (Visa Holdings Inc.). EPCOS™ of Epcos AG. FLEXGO™ of Microsoft Corporation. FlexRay™ is licensed by FlexRay Consortium. HYPERTERMINAL™ of Hilgraeve Incorporated. IEC™ of Commission Electrotechnique Internationale. IrDA™ of Infrared Data Association Corporation. ISO™ of INTERNATIONAL ORGANIZATION FOR STANDARDIZATION. MATLAB™ of MathWorks, Inc. MAXIM™ of Maxim Integrated Products, Inc. MICROTEC™, NUCLEUS™ of Mentor Graphics Corporation. Mifare™ of NXP. MIPI™ of MIPI Alliance, Inc. MIPS™ of MIPS Technologies, Inc., USA. muRata™ of MURATA MANUFACTURING CO., MICROWAVE OFFICE™ (MWO) of Applied Wave Research Inc., OmniVision™ of OmniVision Technologies, Inc. Openwave™ Openwave Systems Inc. RED HAT™ Red Hat, Inc. RFMD™ RF Micro Devices, Inc. SIRIUS™ of Sirius Satellite Radio Inc. SOLARIS™ of Sun Microsystems, Inc. SPANSION™ of Spansion LLC Ltd. Symbian™ of Symbian Software Limited. TAIYO YUDEN™ of Taiyo Yuden Co. TEAKLITE™ of CEVA, Inc. TEKTRONIX™ of Tektronix Inc. TOKO™ of TOKO KABUSHIKI KAISHA TA. UNIX™ of X/Open Company Limited. VERILOG™, PALLADIUM™ of Cadence Design Systems, Inc. VLYNQ™ of Texas Instruments Incorporated. VXWORKS™, WIND RIVER™ of WIND RIVER SYSTEMS, INC. ZETEX™ of Diodes Zetex Limited.

Last Trademarks Update 2011-02-24

Table of Contents

Table of Contents 4
1 Introduction 6
2 Board Characteristics 7
3 Functional Description 8
3.1 Power Supply 9
3.2 Oscillator 9
3.3 Parallel Interface 9
3.3.1 µC Control Mode 9
3.3.2 Direct Control Mode 11
3.4 Serial Interface 12
3.5 Sensor Input Stage 13
3.6 Filter Setting 14
4 Connectors 15
5 Schematic 17
6 PCB Layout 19
7 Bill of Material 20

1 Introduction

Application

This Application Note describes an Evaluation Board with two isolated 8 Channel IEC61131-2 compatible Digital Input IC's for a wide range of industrial applications.

The board is designed to allow easy exploration of the features of the ISOFACE™ Digital Input part. It contains two ISO1I811T as an electrically isolated 8 bit data input interface in TSSOP-48 package. These parts are used to detect the signal states of up to eight independent input lines according to IEC61131-2 Type 1/2/3 (e.g. two-wire proximity switches) with a common ground.

An 8 bit parallel/serial µC compatible interface allows to connect the IC directly to a µC system. The input interface supports also a direct control mode and is designed to operate with 3.3/5V CMOS compatible levels.

The data transfer from input to output side across the galvanic isolation uses Infineon's Coreless Transformer Technology.

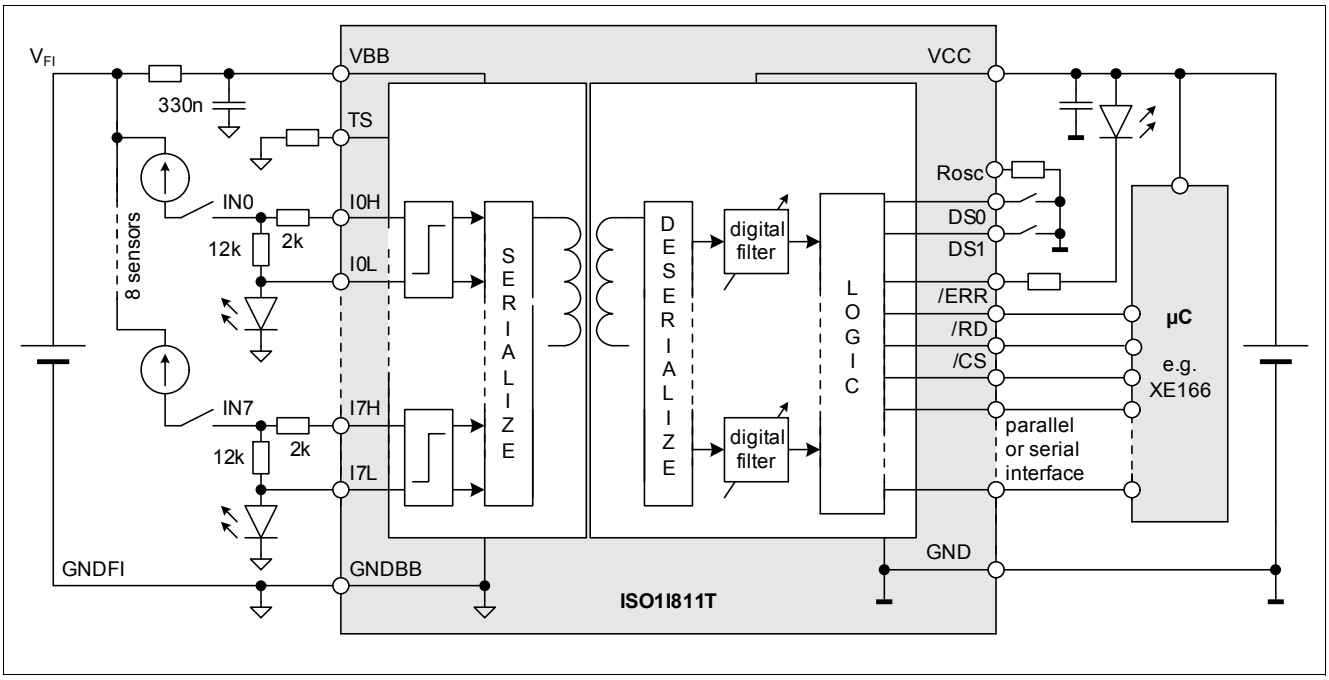

Figure 1 Typical Application

ISO1I811T

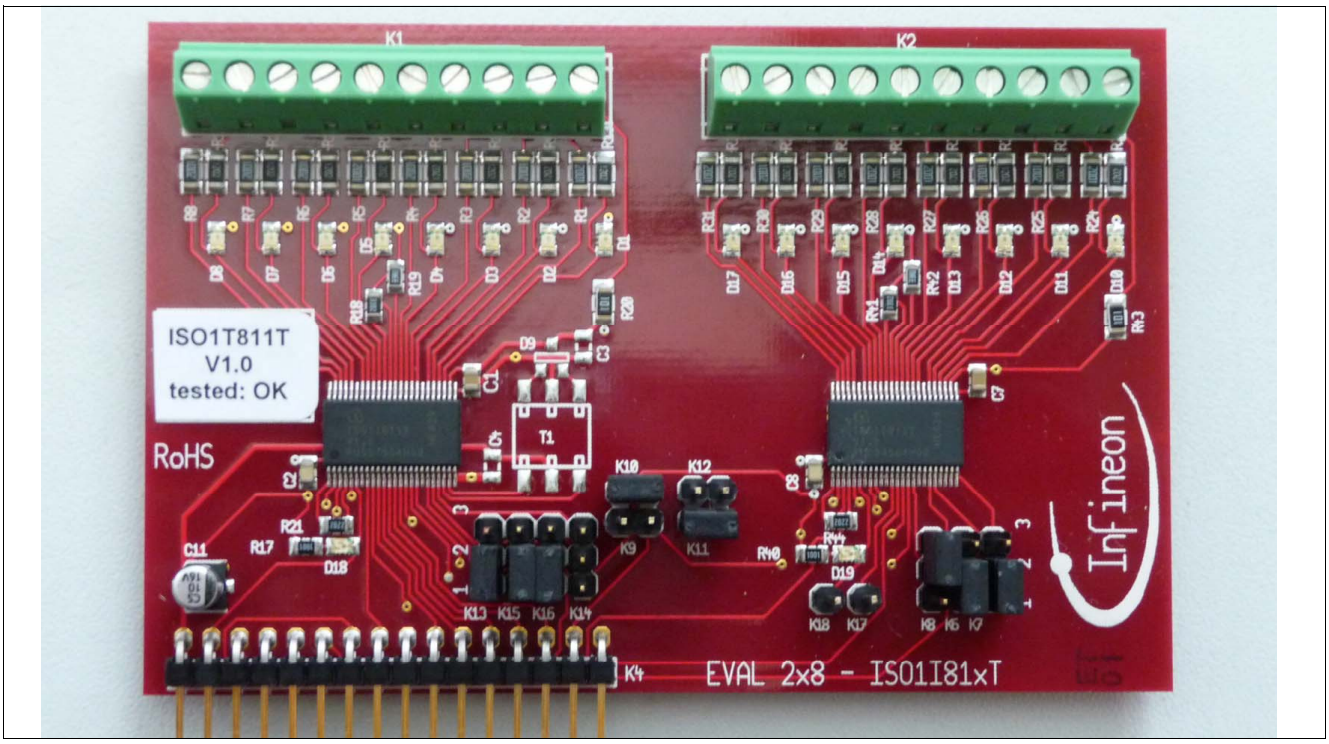

Figure 2 **EVAL 2x8-ISO1I811T**

2 Board Characteristics

Table 1 **Board Characteristics**

Parameter	Symbol	Values			Unit	Note / Test Condition
		Min.	Typ.	Max.		
V_{BB} Input Voltage	V_{BB}	9.6	–	35	V	
VINx Input Voltage	V_{INx}	-35		35	V	
V_{CC} Input Voltage	V_{CC}	3.0	–	5.5	V	
Logic Signals uC Interface	V_{IL}	-0.3	–	0.3 x V_{CC}	V	
	V_{IH}	0.7 x V_{CC}	–	V_{CC} + 0.3 V	V	
Oscillator Frequency		50		125	kHz	set to 125kHz using R_{OSC} 82k

For a complete description of the characteristics of the ISO1I811T please consult respective Data Sheet available at: **www.infineon.com/isoface**

Note: this board is intended to be used in the lab to explore the functionality of the ISO1I811T device. It is not designed to be used in professional applications!

3 Functional Description

This board contains two ISO1I811T as an electrically isolated 8 bit data input interface in TSSOP-48 package. These parts are used to detect the signal states of up to eight independent input lines according to IEC61131-2 Type 1/2/3 (e.g. two-wire proximity switches) with a common ground.

For operation in accordance with IEC61131-2, it is necessary for the ISO1I811T to be wired with resistors rated R_{IN} and R_{LED}. (it is recommended to use resistors with an accuracy of 2%, in any case < 5% - mandatory, temperature-coefficients < 200ppm are allowed)

A parallel/serial µC compatible interface allows to connect the board directly to a µC system.

If the parallel interface is used, only IC1 can be operated. In serial mode either IC1 can be used with 8 Bit SPI or IC1 and IC2 can be put into a Daisy Chain configuration with 16 Bit SPI.

The isolated data transfer from input to output side is realized by the integrated Coreless Transformer Technology.

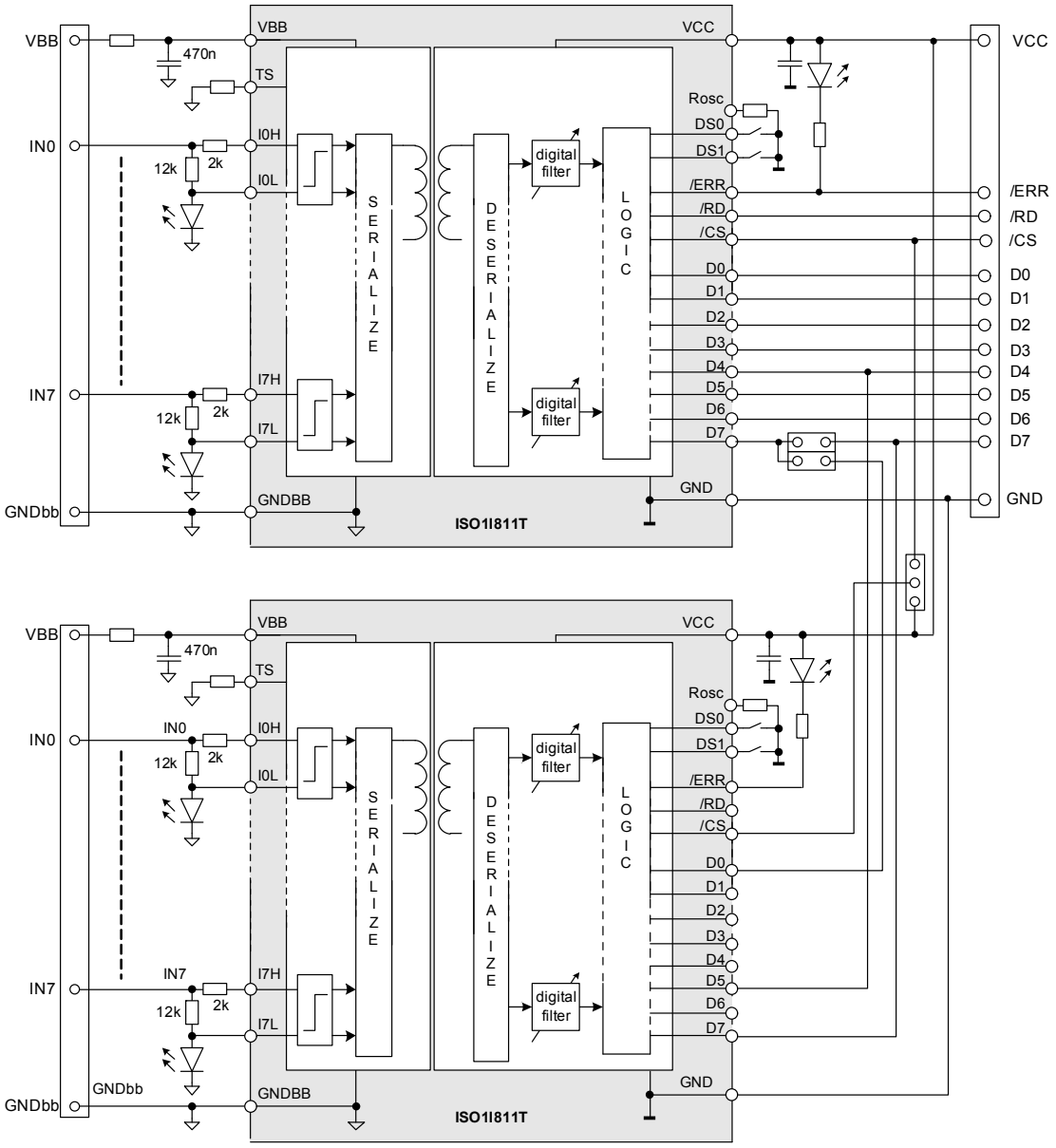

Figure 3 Block Diagram

3.1 Power Supply

The IC contains 2 electrically isolated voltage domains that are independent from each other. The microcontroller interface is supplied via pin VCC and the input stage is supplied via pin VBB. The different voltage domains can be switched on at different time. If the VCC and VBB voltage have reached their operating range and the internal data transmission have been started successfully, the IC indicates the end of the Start-Up procedure by setting the pin /ERR to logic high.

3.2 Oscillator

The frequency of the internal oscillator can be set by the resistor R_{OSC}. This internal oscillator provides the clock for the data sampling and transmission as well as for the digital averaging filter. For adjusting the frequency of the oscillator the values of R_{OSC} can be taken out of the diagram in the ISO1I811T datasheet.

3.3 Parallel Interface

The ISO1I811T contains a parallel interface that can be selected by pulling the pin SEL to logic low state (see also **Table 2**).

This interface can be directly controlled by the microcontroller output signals. The parallel interface can also be switched over to a direct control that allows direct changes of the inputs IN0...IN7 by means of the corresponding inputs D0 ... D7 on the Demo Board without additional logic signals. To activate the parallel direct control mode, both the pin$\overline{CS}$ and pin$\overline{RD}$ must be connected to ground.

Table 2 Mode Select

Mode	**K13**	**K9**	**K10**	**K8**	**K15**	**K16**
Parallel (IC1)	2 - 3	close	open	1 - 2	open	open
Serial 8 Bit (IC1)	1 - 2	close	open	1 - 2	Table 4	Table 4
Serial 16 Bit	1 - 2	open	close	2 - 3	Table 4	Table 4

3.3.1 µC Control Mode

$\overline{CS}$ - Chip select. The system microcontroller selects the ISO1I811T by means of thepin $\overline{CS}$. Whenever the pin is in a logic low state, data can be transferred from the µC.

$\overline{RD}$ - Read. The system controller enables the read procedure in the ISO1I811T by means of the signal $\overline{RD}$. A logic low state signal at pin $\overline{RD}$ enables the output data when thepin $\overline{CS}$ is in a logic low state.

D0…D7. The parallel output data is transferred to the data bus a high-to-low transition of the signal $\overline{RD}$ (read) while the $\overline{CS}$ is logic low. Then a low-to-high transition of $\overline{CS}$ sets the driver to tristate.

The µC Control Mode can be operated by connecting a Processor Board to the corresponding Signals of Connector K4. The timing requirements for the µC Control Mode are shown in **Figure 5**.

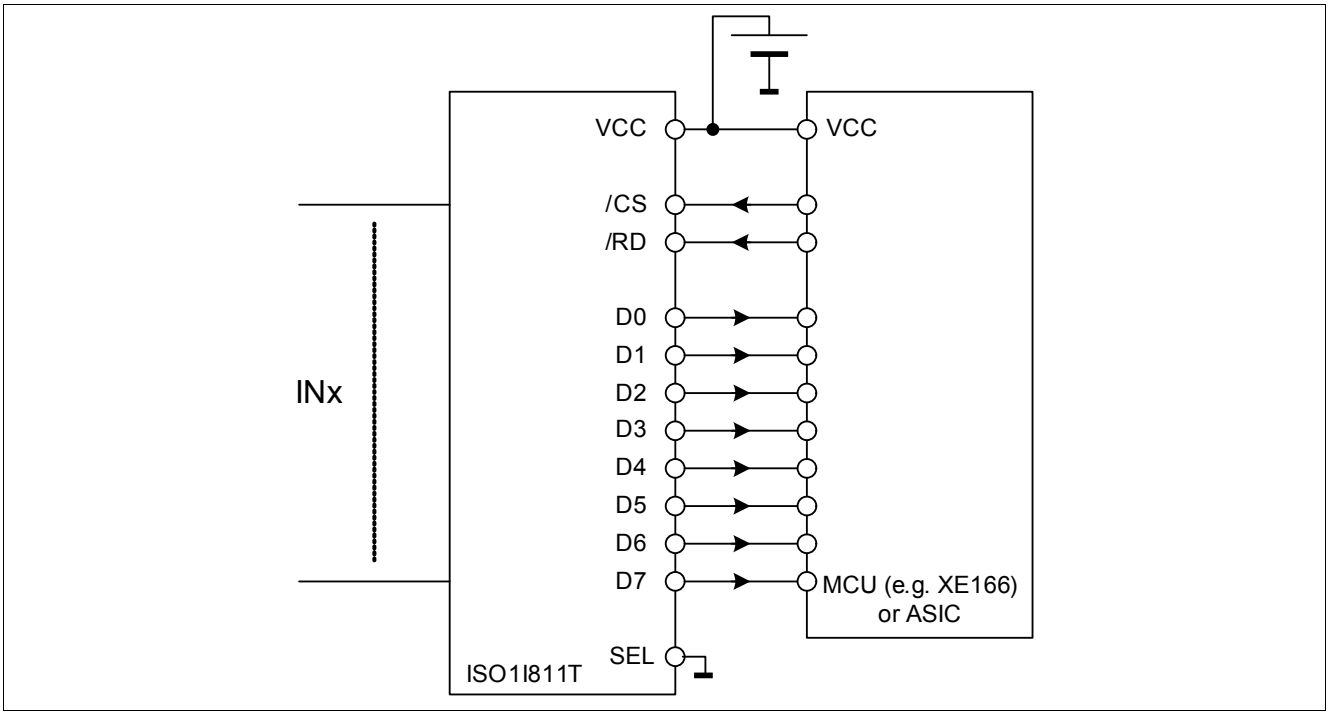

Figure 4 µC Control Mode

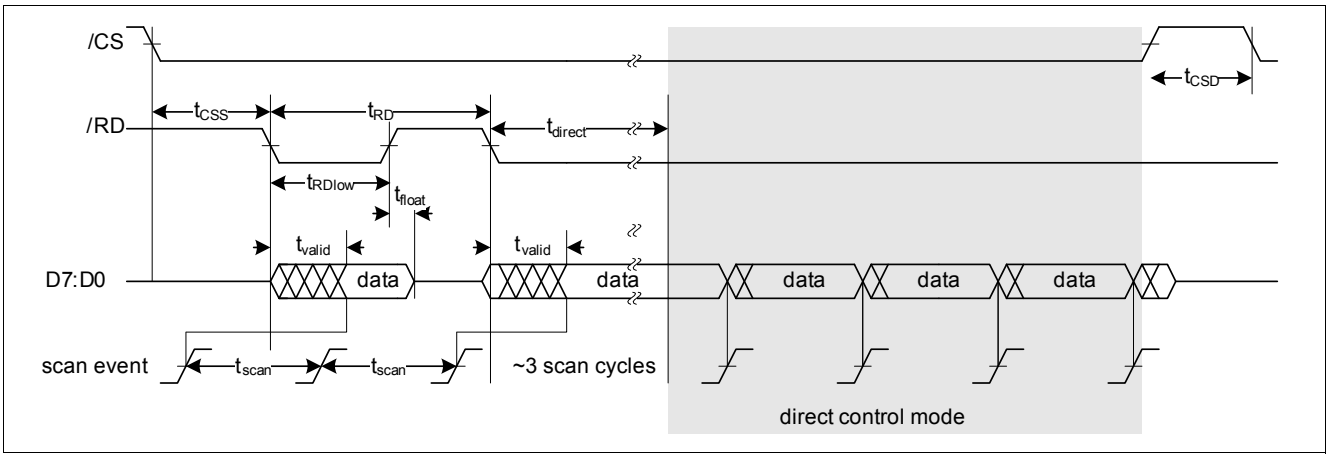

Figure 5 Timing Diagram µC Control Mode

3.3.2 Direct Control Mode

Beside the use of the parallel µC compatible interface, a parallel direct control mode can be chosen. In this mode, the output Data D0...D7 will directly follow the inputs IN0...IN7 without the need for additional logic signals. To activate this mode, pin $\overline{CS}$ and $\overline{RD}$ must be connected to ground for a time longer then 15us (see also **Figure 6**).

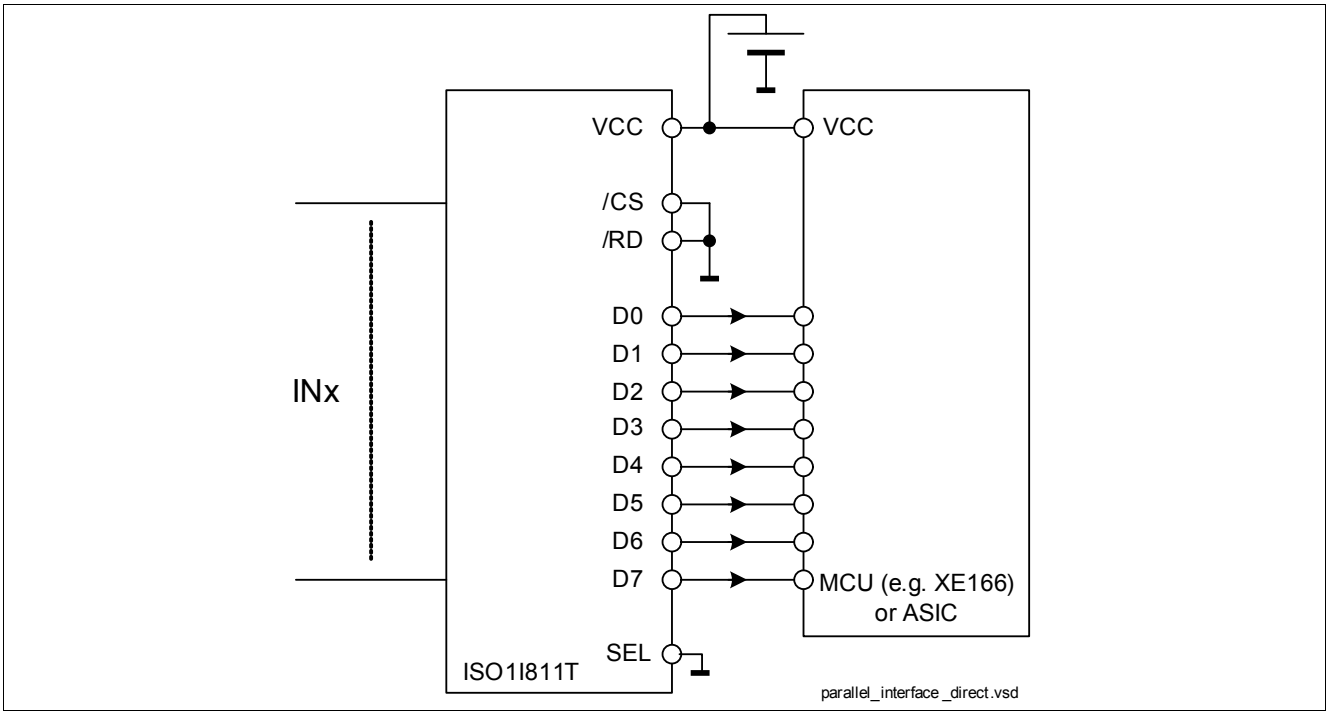

Figure 6 Direct Control Mode

3.4 Serial Interface

The ISO1I811T contains a serial interface that can be activated by pulling the pin SEL to logic High state . It can be directly controlled by the microcontroller output ports. The output pin SDO is in state “Z” as long as $\overline{CS}$=1. Otherwise, the bits are sampled with the falling edge of $\overline{CS}$. With every falling edge of SCLK the bits are provided serially to the pin SDO, respectively. At the same time, the input to SDI is put into an 8bit FIFO buffer sampled with the rising edge of SCLK. When all 8 internally sampled bits from SDI input have been put to SDO, the buffered bits are provided to these pins (Daisy Chain Mode). The timing requirements for the serial interface are shown in **Figure 8**.

The serial interface can be set to 8 Bit operation by using IC1 only or to 16 Bit operation by using IC1 and IC2 in Daisy Chain Mode. For this purpose the jumpers K8, K9, K10 have to be set in the according manner (see also **Figure 7**, **Table 2**)

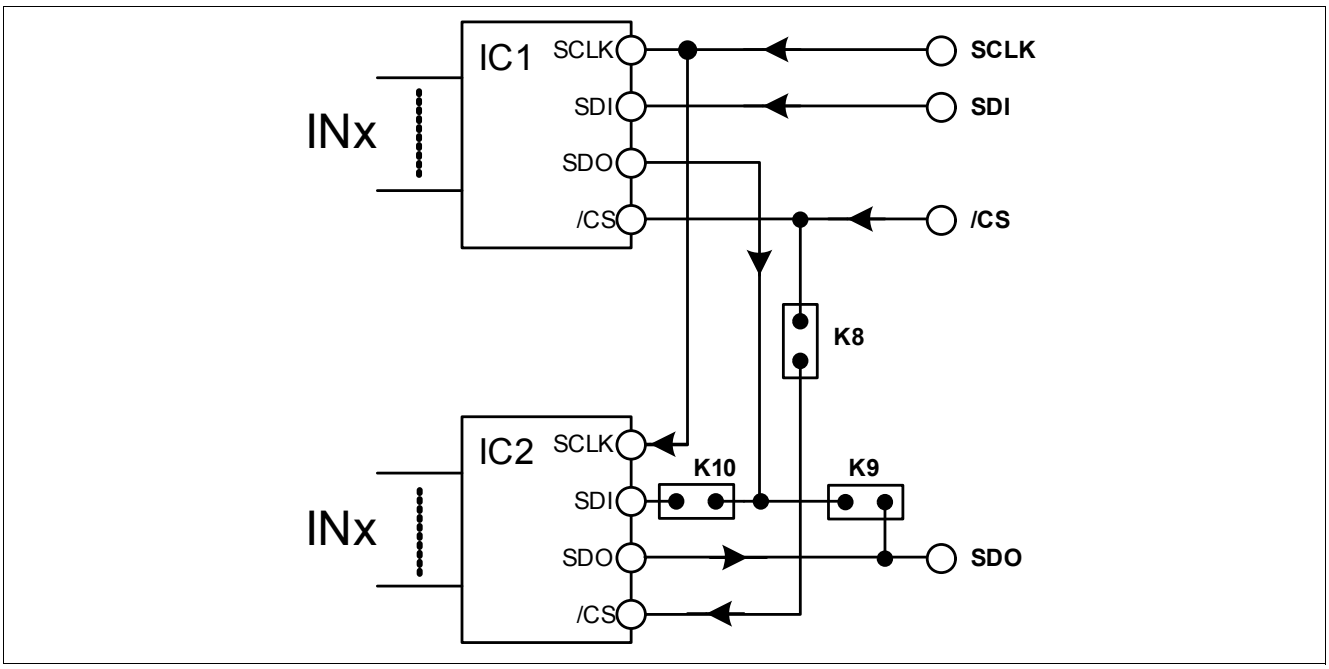

Figure 7 SPI Configuration

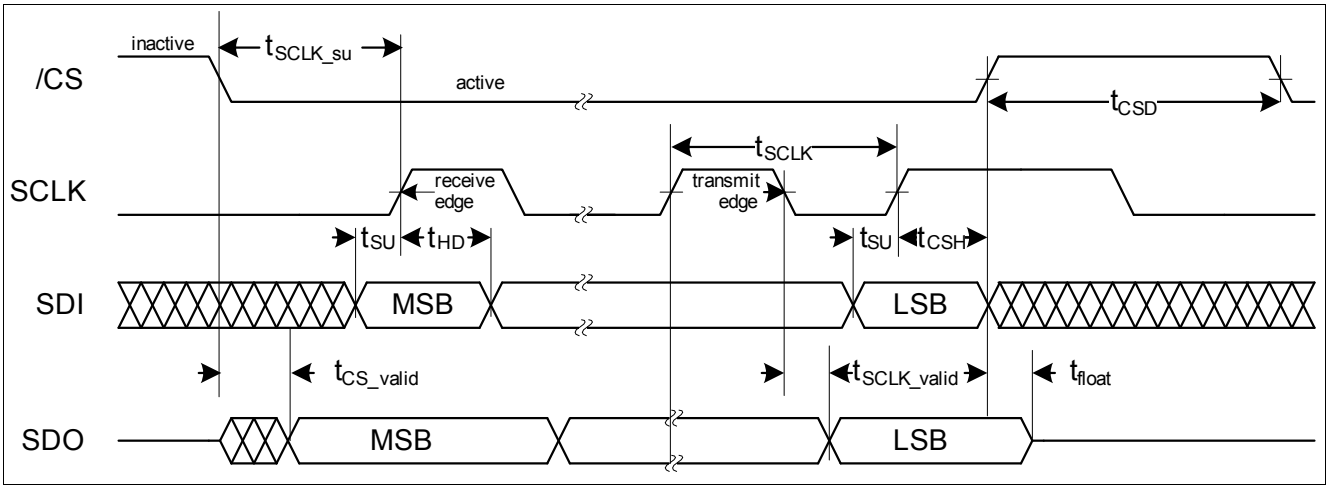

Figure 8 Timing Diagram Serial Mode

3.5 Sensor Input Stage

The sensor input structure is shown in **Figure 9**. Due to its active current a I-V-characteristic as shown in **Figure 10** is maintained. This I-V-curve is well within the IEC 61131 standard requirements of Type 1 and Type 3 sensors, respectively. Type 2 sensors are supported as well with the restriction that 2 input channels have to be used in parallel i.e. only 4 channels are available. Additionally R_{IN} and R_{LED} has to be modified according **Figure 9**. It is recommended to choose for the external resistors R_{IN}, R_{LED} an accuracy of 2 % (< 5% is mandatory) otherwise the I/V-characteristic shown in **Figure 10** cannot be attained. The Input Type 1, 2, 3 can be selected by modifying R_{TS} according **Table 3**.

Table 3 Type Select

Input Characteristic according IEC61131-2	Type 1	Type 2	Type 3
R_{TS}	33R	33k	330k

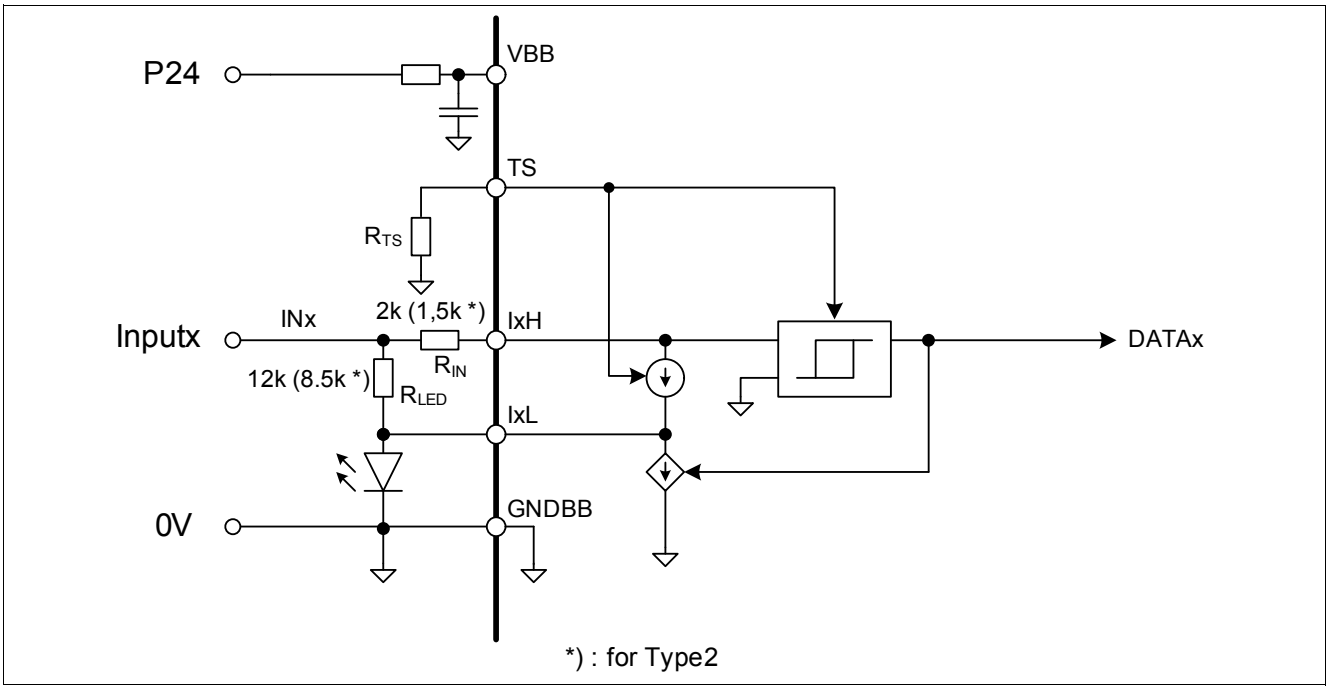

Figure 9 Sensor Input

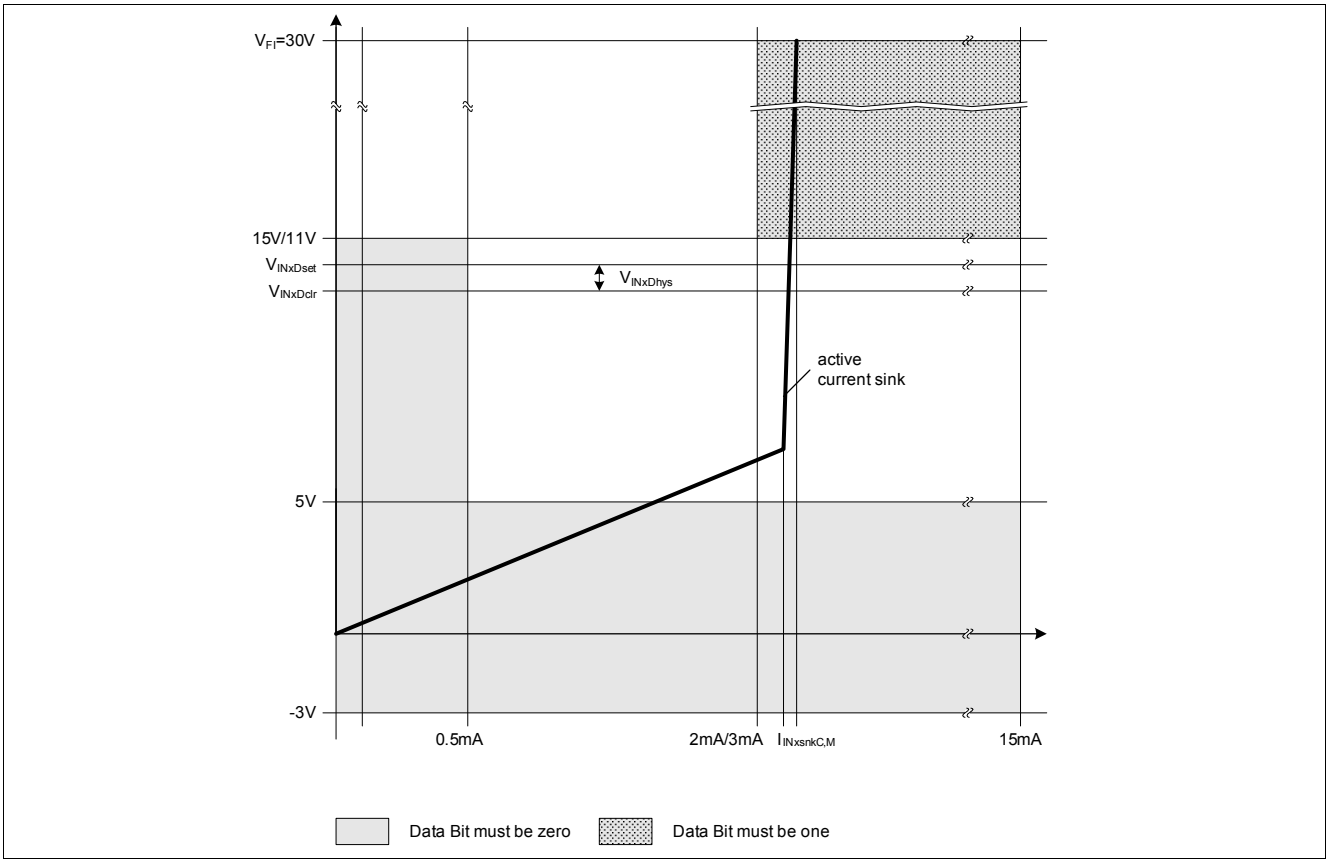

Figure 10 Sensor Input Characteristic

3.6 Filter Setting

The sensor data bits can be filtered by a configurable digital input filter. If selected, the filter changes its output according to an averaging rule with a selectable average length. When the sensor state changes without any spikes and noise the change is delayed by the averaging length. Sensor spikes that are shorter than the averaging length are suppressed. The averaging length is selected using the configuration pins DS0 and DS1. See **Table 4** for the different setting options including filter bypass. The filters are dimensioned for the nominal internal sampling fscannom. The corresponding filter delays can be adjusted by changing the oscillator frequency i.e. by tuning the resistor at the pin R_{OSC} .

Table 4 Filter Time Setting

	K15	K16	K6	K7
Delay Time	IC1		IC2	
0ms (bypass)	1 - 2	1 - 2	1 - 2	1 - 2
1ms	2 - 3	1 - 2	2 - 3	1 - 2
3.2ms	1 - 2	2 - 3	1 - 2	2 - 3
10ms	2 - 3	2 - 3	2 - 3	2 - 3

4 Connectors

Table 5 K1, K2 Connector

Pin Number	K1 (IC1)	K3 (IC2)
1	V_{BB}	V_{BB}
2	Input0	Input0
3	Input1	Input1
4	Input2	Input2
5	Input3	Input3
6	Input4	Input4
7	Input5	Input5
8	Input6	Input6
9	Input7	Input7
10	GND_{BB}	GND_{BB}

Table 6 K4 Connector

Pin Number	Serial Mode	Parallel Mode
1	VCC	VCC
2	$\overline{ERR}$	$\overline{ERR}$
3		NC
4		$\overline{RD}$
5	DS0	DS0
6	DS1	DS1
7	$\overline{CS}$	$\overline{CS}$
8	SDI	D0
9		D1
10		D2
11		D3
12		D4
13	SCLK	D5
14		D6
15	SDO	D7
16		GND

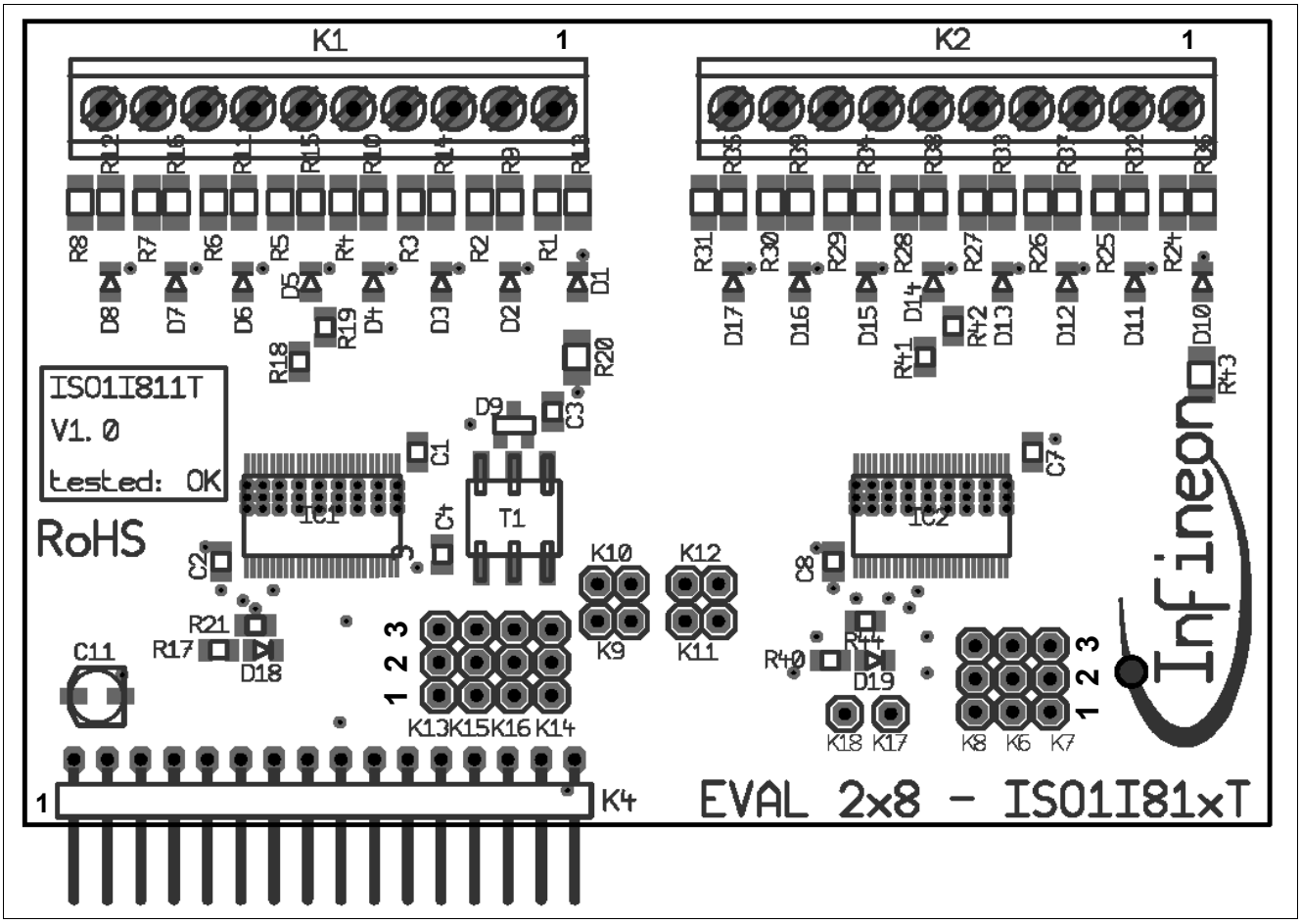

Figure 11 Board Assembly

5 Schematic

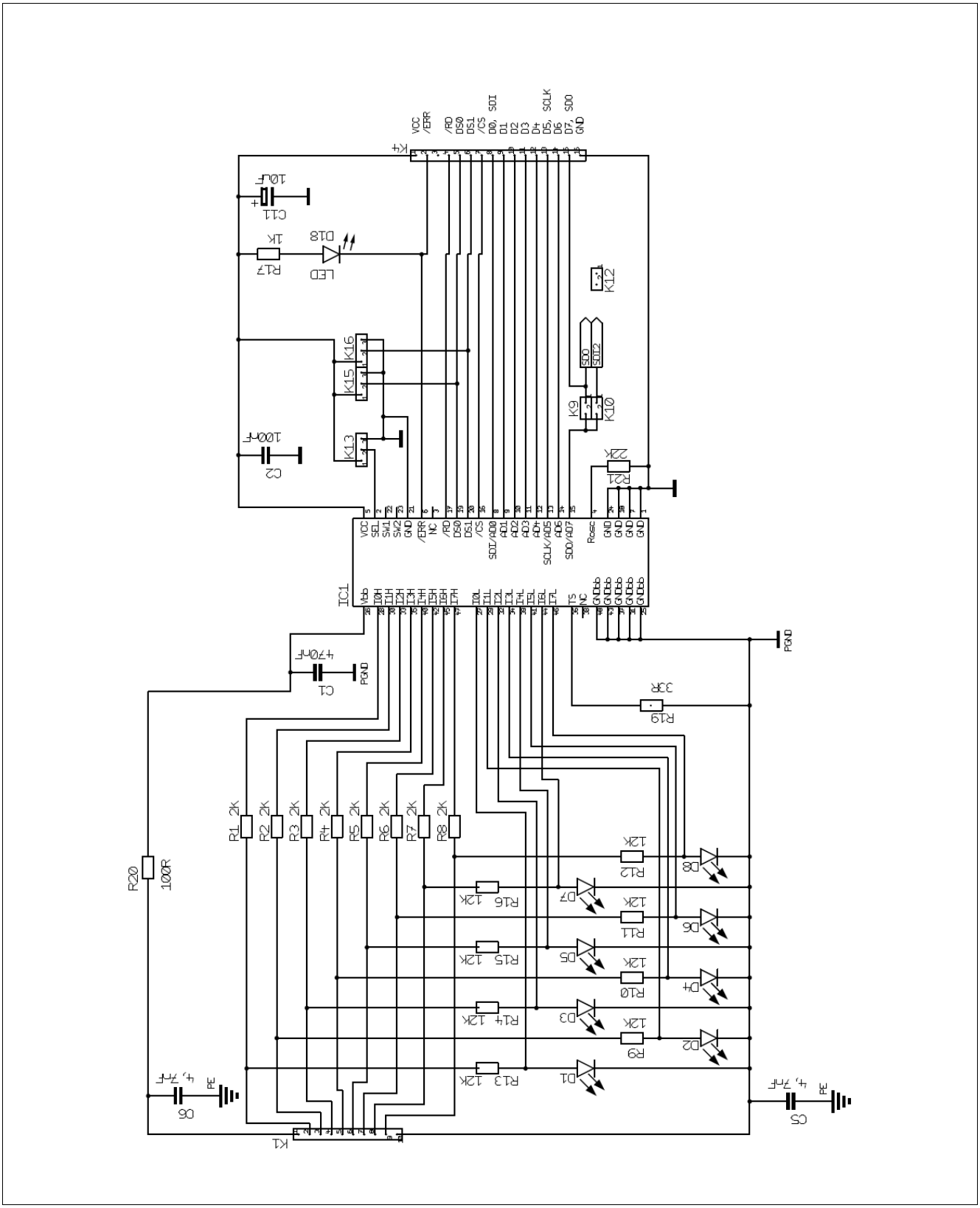

Figure 12 Schematic Page 1

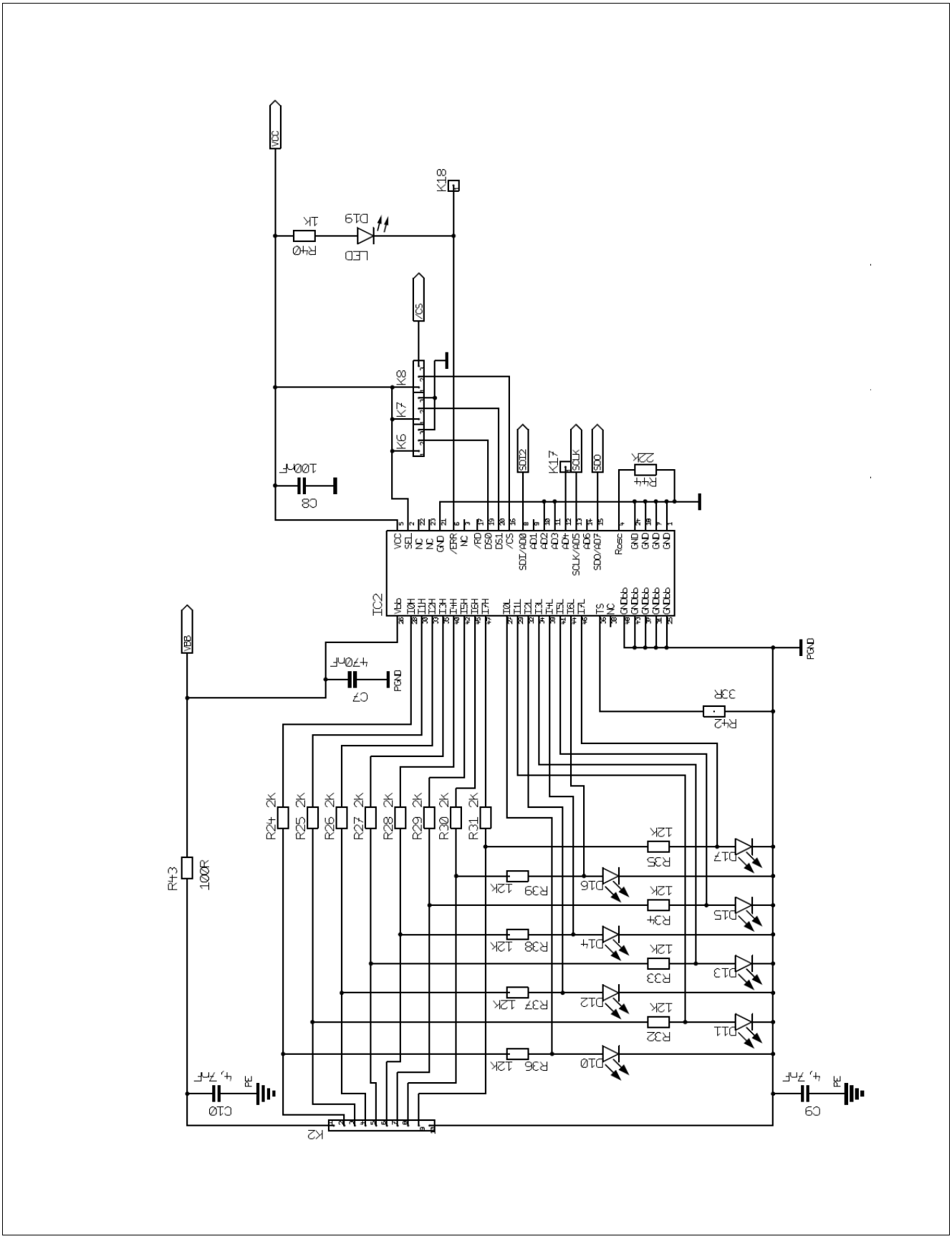

Figure 13 Schematic Page 2

6 PCB Layout

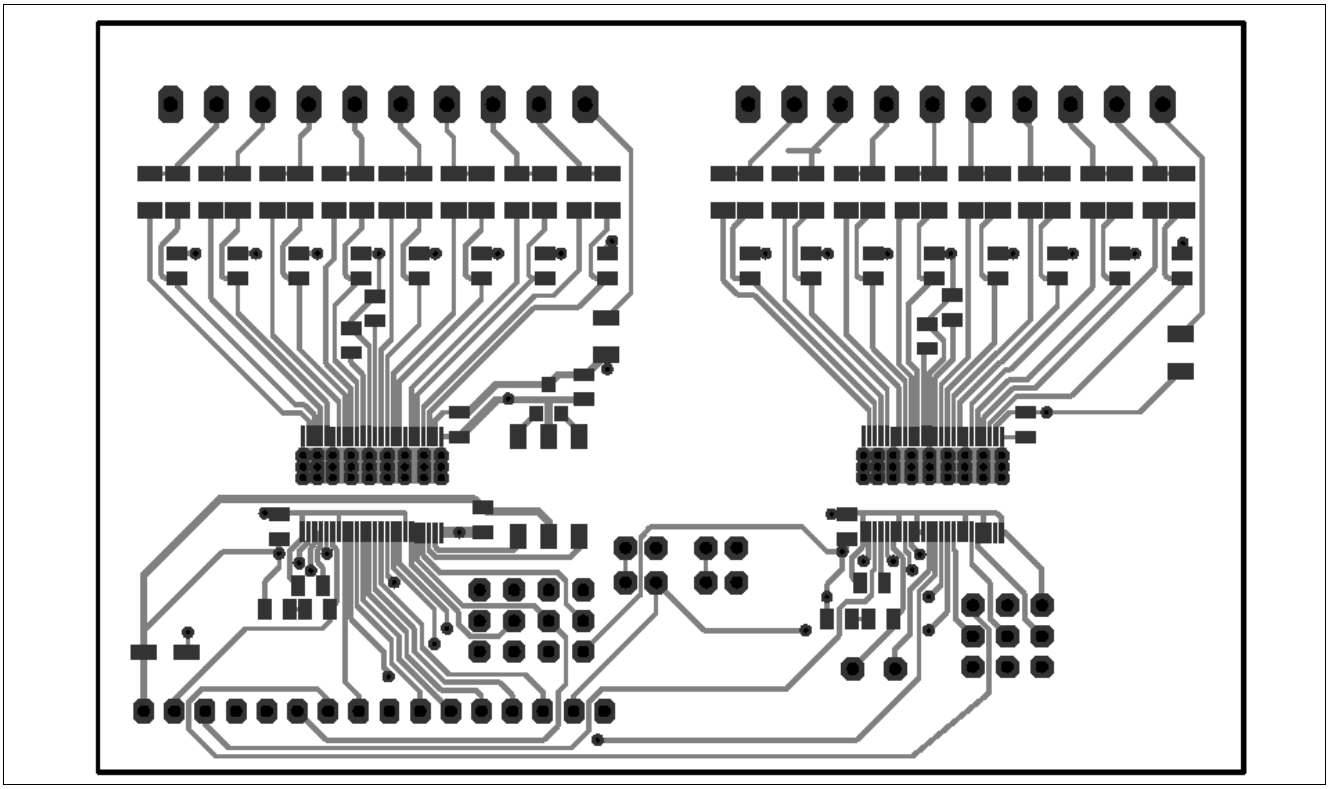

Figure 14 Board Layout - Component Side

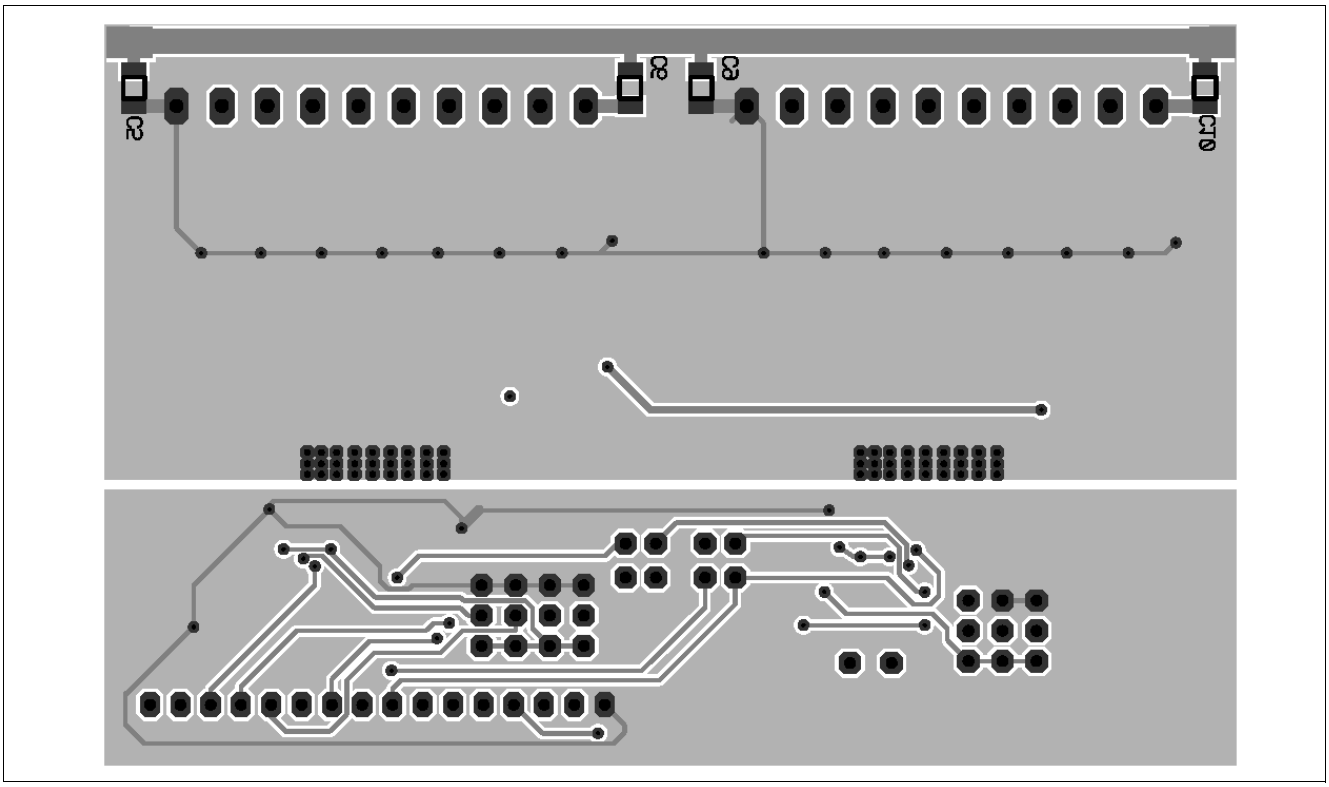

Figure 15 Board Layout - Bottom Side (mirror view)

7 Bill of Material

Table 7 Bill of Material

Nr	Quant.	Pos.	Value	Package
1	2	C1, C7	470nF, 50V	805
2	1	C11	10uF,16V	SMD-B
3	2	C2, C8	100nF, 50V	805
4	16	D1, D2, D3, D4, D5, D6, D7, D8, D10, D11, D12, D13, D14, D15, D16, D17	LED, gn KPHCM-2012CGCK	0805-DIODE
5	2	D18, D19	LED, rt KPHCM-2012EC-T	0805-DIODE
6	2	IC1, IC2	ISO1I811T	TSSOP48
7	2	K1, K2	MKDS 1/10-3,81	10x3,81mm
8	2	K9, K10	Connector 2pol	2,54mm
9	6	K6, K7, K8, K13, K15, K16	Connector 3pol	2,54mm
10	2	K17, K18	Connector 1pol	2,54mm
11	1	K4	Connector 16pol	2,54mm
12	16	R1, R2, R3, R4, R5, R6, R7, R8, R24, R25, R26, R27, R28, R29, R30, R31	2k, 1%	1206
13	2	R17, R40	1k, 1%	805
14	2	R19, R42	33R, 1%	805
15	2	R20, R43	100R, 1%	1206
16	2	R21, R44	82k, 1%	805
17	16	R9, R10, R11, R12, R13, R14, R15, R16, R32, R33, R34, R35, R36, R37, R38, R39	12k, 1%	1206
18	5		Spacer D8mm , H2,8mm	
19	1	wire	K11	2,54mm
20	6	Jumper		
21	1		Print Board	

References

[1] ISO1I811T, Isolated 8 Channel Digital Input with IEC61131-2 Type 1/2/3 Characteristics, Data Sheet, Infineon Technologies

w w w . i n f i n e o n . c o m

Published by Infineon Technologies AG