MATERIAL NO.	ENGINEERING NO.	LENGTH
1300150024	3R1004A20A120	12" +.75-0 [305mm +19.0-0]
1300150033	3R1004A20F060	6'0" +2.19-0 [1.8M +55.6-0]

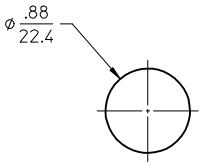

REF. KNOCK-OUT HOLE

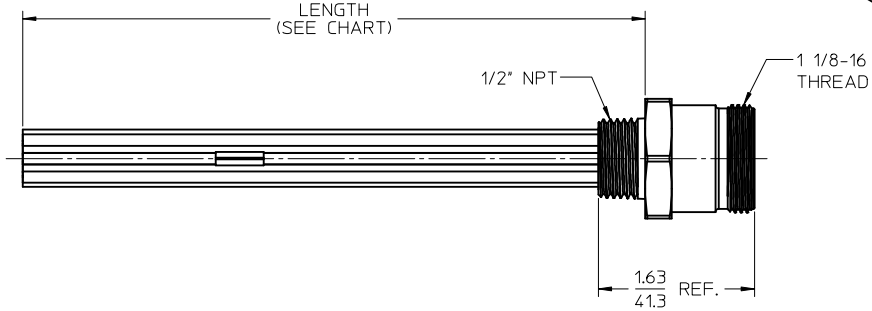

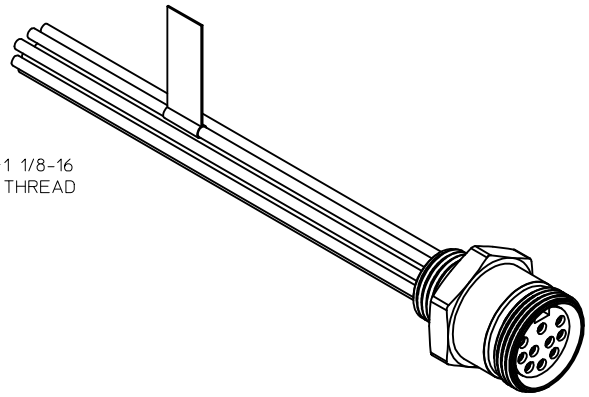

NOTES:
1. MATERIAL: SEE TABLE
2. FINISHES: SEE TABLE
3. MATES WITH: NONE
4. ELECTRICAL SPECIFICATIONS:
   VOLTAGE RATING: 600V AC/DC
   CURRENT RATING: 7 AMPS
5. RoHS COMPLIANT

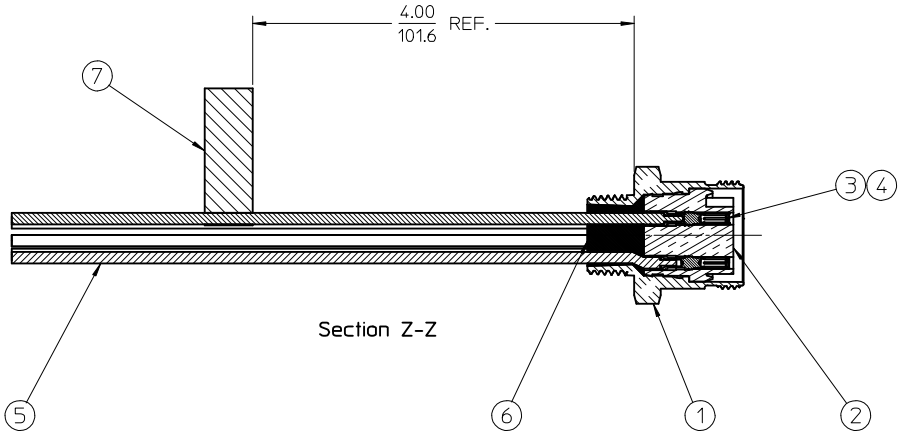

Section Z-Z

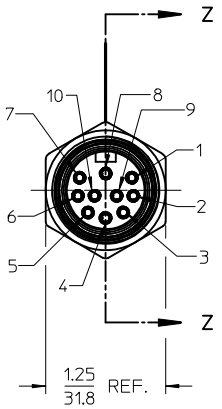

1	ORANGE
2	BLUE
3	WHITE-BLACK
4	RED-BLACK
5	GREEN-BLACK
6	ORANGE-BLACK
7	RED
8	GREEN-YELLOW
9	BLACK
10	WHITE

WIRING DIAGRAM

ITEM	QTY.	DESCRIPTION	MATERIAL	FINISH
7	1	LABEL	PLASTIC FILM	BLACK/YELLOW
6	1	POTTING	EPOXY	
5	10	WIRE, 16 AWG (UL 1015)	PVC INSULATED	SEE WIRE DIAGRAM
4	10	SOCKET SLEEVE	ST.STEEL	
3	10	CONTACT SOCKET	BRASS	GOLD PLATED
2	1	INSERT	PVC	YELLOW
1	1	RECEPECTACLE SHELL	ZINC ALLOY	BLACK

RELEASED
EC NO: WNA2010-0101 2009/08/17
DRWN:RSTONE
CHKD:B.WOODMAN
APPR: JFMURPHY 2009/08/21
DESCRIPTION
A
REV

QUALITY SYMBOLS
▼=0
(C)=0

GENERAL TOLERANCES (UNLESS SPECIFIED)

	mm	INCH
4 PLACES	± ---	± ---
3 PLACES	± ---	± ---
2 PLACES	± ---	± .01
1 PLACE	± 0.3	± ---
ANGULAR ±1/2°		

DRAFT WHERE APPLICABLE MUST REMAIN WITHIN DIMENSIONS

DIMENSION STYLE: IN/MM
SCALE: 1:1
DESIGN UNITS: INCH
THIRD ANGLE PROJECTION

DRAWN BY: R.STONE DATE: 2009/08/17
CHECKED BY: B.WOODMAN DATE: 2009/08/17
APPROVED BY: J.MURPHY DATE: 2009/08/20

TITLE: MC RECEPTACLE, FEMALE 10 POLE, 1/2" NPT

molex MOLEX INCORPORATED

MATERIAL NO.: SEE CHART
DOCUMENT NO.: SD-130015-005
SHEET NO.: 1 OF 1
SIZE: C

THIS DRAWING CONTAINS INFORMATION THAT IS PROPRIETARY TO MOLEX INCORPORATED AND SHOULD NOT BE USED WITHOUT WRITTEN PERMISSION

FACE VIEW-FEMALE INSERT

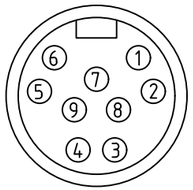

1 ORANGE	1 ORANGE	1 ORANGE
2 BLUE	2 BLUE	2 BLUE
3 RED/BLACK	3 WHITE/BLACK	3 WHITE/BLACK
4 GREEN/BLACK	4 RED/BLACK	4 RED/BLACK
5 WHITE	5 GREEN/BLACK	5 GREEN/BLACK
6 RED	6 ORANGE/BLACK	6 ORANGE/BLACK
7 GREEN/YELLOW	7 RED	7 BLUE/BLACK
8 WHITE/BLACK	8 GREEN/YELLOW	8 BLACK/WHITE
9 BLACK	9 BLACK	9 GREEN/YELLOW
	10 WHITE	10 RED
		11 WHITE
		12 BLACK

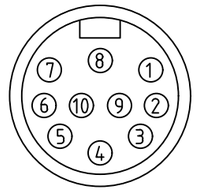

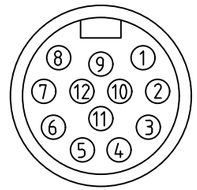

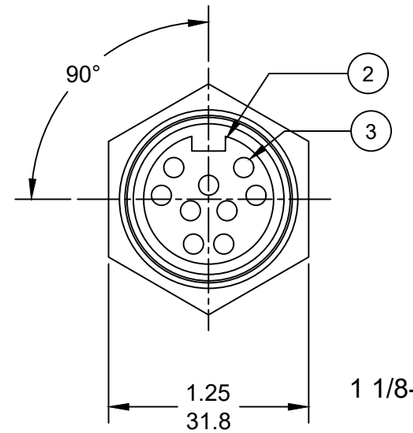

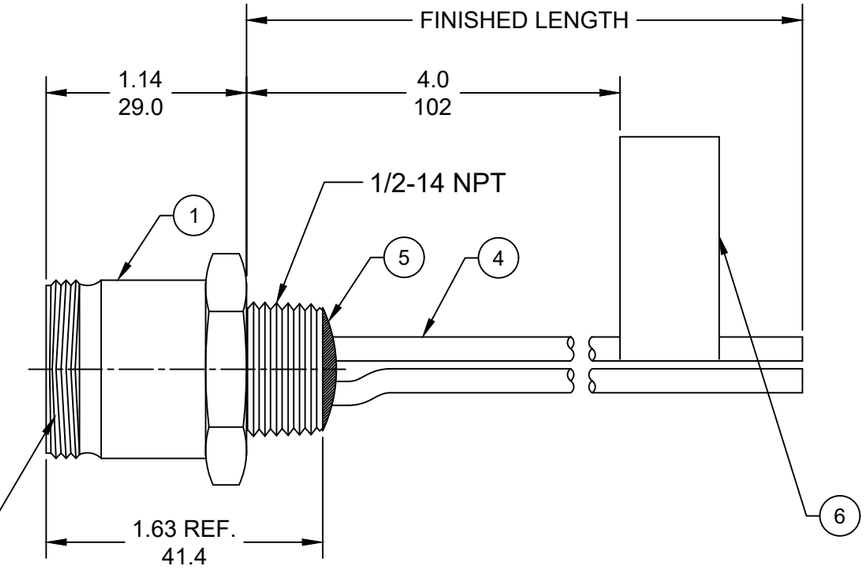

PART NO	ENGINEERING NO.	FINISHED LENGTH
1300150117	3R9004A20A120	12 IN [0.3M]
1300150038	3R1004A20F100	10 FT [3.0M]
1300150001	3R2004A20M060	6.0M [19 FT 8 IN]

(C)

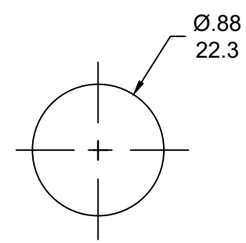

REF. KNOCKOUT HOLE

PART NO. MATRIX

3R1004A20F010

POLES

9= 9 POLES
1=10 POLES
2=12 POLES

LENGTH:

A120= 12 INCHES
F001= .1 FT
F020= 2 FT
F200= 20 FT

M005= 0.5 METER
M010= 1 METER
M100= 10 METER

NOTES:
1. MATERIAL: AS NOTED
2. FINISH: AS NOTED
3. ELECTRICAL:
   VOLTAGE: 320V PER IEC60664
   600V PER UL2238
   CURRENT: 9 POLE: 7A
   10 POLE: 7A
   12 POLE: 5A
4. TEMP RATING: -20°TO +105°C
5. PROTECTION: IP67 (WHEN MATED)
6. UL RECOGNIZED, FILE: E152210
   CSA CERTIFIED, FILE: LR6837 (C)
7. ALL DIMENSIONS ARE FOR REFERENCE UNLESS TOLERANCED OR NOTED OTHERWISE

CABLE LENGTH TOLERANCES
>.3M [1FT]: +19mm-0 [+.75in-0]
.3 - .9M [1 - 3FT]: +44.5mm-0 [+1.75in-0]
.9 - 1.8M [3 - 6FT]: +55.6mm-0 [+2.19in-0]
1.8 - 3.7M [6 - 12FT: +88.9mm-0 [+3.50in-0]
3.7 - 7.3M [12 - 24FT]: +165.1mm-0 [+6.50in-0]
7.3-14.6M [24 - 48FT]: +317.5mm-0 [+12.50in-0]
14.6 - 30.5M [48-100FT]: +622.3mm-0 [+24.50in-0]
OVER 30M [100FT] +2% OF FINISHED LENGTH

ITEM	DESCRIPTION	MATERIAL	FINISH
6	FLAG LABEL	VINYL	BLACK/YELLOW
5	POTTING MATERIAL	EPOXY	
4	WIRE, 16 AWG UL (1015)	PVC INSULATION	SEE CHART
3	CONTACT SOCKET	COPPER ALLOY	GOLD PLATED
2	FEMALE INSERT (C-SIZE)	TPE	YELLOW
1	RECEPTACLE SHELL	ZINC DIE-CAST	BLACK

(C)

DOCUMENT STATUS	P1	RELEASE DATE	2020/07/27 17:35:18

THIS DRAWING CONTAINS INFORMATION THAT IS PROPRIETARY TO MOLEX ELECTRONIC TECHNOLOGIES, LLC AND SHOULD NOT BE USED WITHOUT WRITTEN PERMISSION

FUNCTIONAL SYMBOLS: EA=0, EC=0, EP=0
DIVISIONAL SYMBOLS

DIMENSION UNITS: INCH/MM
SCALE: NTS

GENERAL TOLERANCES (UNLESS SPECIFIED)

	mm	INCH
4 PLACES	±----	±----
3 PLACES	±----	±----
2 PLACES	±----	±----
1 PLACE	±----	±----
0 PLACES	±----	±----
ANGULAR TOL ± 2.0 °		

DRAFT WHERE APPLICABLE MUST REMAIN WITHIN DIMENSIONS

CURRENT REV DESC: ITEM #2 WAS PVC, ADDED CSA IN NOTES AND MODIFIED MATERIAL TABLE

EC NO:	641453	
DRWN:	ABENJAMINLW	2020/06/25
CHK'D:	RSTONE	2020/07/20
APPR:	BWOODMAN	2020/07/27
INITIAL REVISION:		
DRWN:	RSTONE	2016/07/11
APPR:	TWOLDEGE	2016/08/19

THIRD ANGLE PROJECTION | DRAWING: B-SIZE | SERIES: 130015

molex

MINI-CHANGE RECEPTACLE, C-SIZE,
9, 10 & 12 POLE, FEMALE, STRAIGHT, SINGLE KEY, 16 AWG

PRODUCT CUSTOMER DRAWING

DOCUMENT NUMBER	DOC TYPE	DOC PART	REVISION
SD-130015-026	PSD	001	C

MATERIAL NUMBER	CUSTOMER	SHEET NUMBER
SEE_CHART	GENERAL MARKET	1 OF 1

FORMAT: IN-ACAD-tb-prod-B
REVISION: B
DATE: 2020/01/14