Protective covers - HC-COM-BCFS-PLR-BK - 1079397

Please be informed that the data shown in this PDF Document is generated from our Online Catalog. Please find the complete data in the user's documentation. Our General Terms of Use for Downloads are valid (http://phoenixcontact.com/download)



Protective cover COM, for single locking latch, protective cover material: PA, height: 24.5 mm, Standard, for socket inserts

RoHS COMPLETE line

Key Commercial Data

Packing unit	1 pc
GTIN	4 055626 799230
GTIN	4055626799230
Custom tariff number	39269097
Country of origin	China

Technical data

General

Size	COM

Ambient conditions

Degree of protection (IP)	IP66
Ambient temperature (operation)	-40 °C ... 125 °C

Material data

Seal material	NBR

Drawings

Protective covers - HC-COM-BCFS-PLR-BK - 1079397

Dimensional drawing

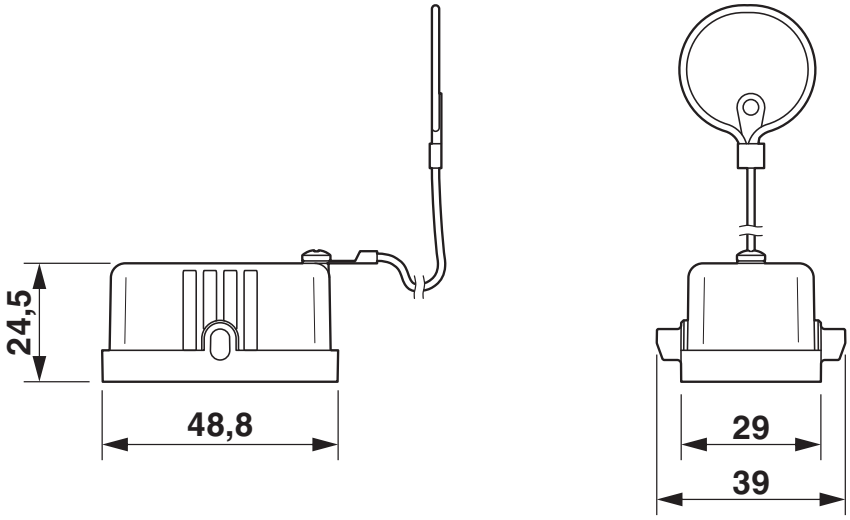

Classifications

eCl@ss

eCl@ss 10.0.1	27440208
eCl@ss 11.0	27440208
eCl@ss 4.0	27140816
eCl@ss 4.1	27140816
eCl@ss 5.0	27143424
eCl@ss 5.1	27143400
eCl@ss 6.0	27261200
eCl@ss 7.0	27440208
eCl@ss 9.0	27440208

ETIM

ETIM 4.0	EC002314
ETIM 6.0	EC002314
ETIM 7.0	EC002314

UNSPSC

UNSPSC 6.01	30212113
UNSPSC 7.0901	39121712
UNSPSC 11	39121712
UNSPSC 12.01	39121712
UNSPSC 13.2	39121421

Protective covers - HC-COM-BCFS-PLR-BK - 1079397

Classifications

UNSPSC

UNSPSC 18.0	39121421
UNSPSC 19.0	39121421
UNSPSC 20.0	39121421
UNSPSC 21.0	39121421

Phoenix Contact 2021 © - all rights reserved
http://www.phoenixcontact.com