Description

The 874S02I is a highly versatile 1:1 Differential- to-LVDS Clock Generator and a member of the family of High Performance Clock Solutions from IDT. The 874S02I has a fully integrated PLL and can be configured as a zero delay buffer, multiplier or divider, and has an output frequency range of 62.5MHz to 1GHz. The reference divider, feedback divider and output divider are each programmable, thereby allowing for the following output-to-input frequency ratios: 8:1, 4:1, 2:1, 1:1, 1:2, 1:4, 1:8. The external feedback allows the device to achieve “zero delay” between the input clock and the output clocks. The PLL_SEL pin can be used to bypass the PLL for system test and debug purposes. In bypass mode, the reference clock is routed around the PLL and into the internal output dividers.

Features

- One differential LVDS output pair and one differential feedback output pair
- One differential clock input pair
- CLK/nCLK can accept the following differential input levels: LVPECL, LVDS, LVHSTL, SSTL
- Input frequency range: 62.5MHz to 1GHz
- Output frequency range: 62.5MHz to 1GHz
- VCO range: 500MHz – 1GHz
- External feedback for "zero delay" clock regeneration with configurable frequencies
- Programmable dividers allow for the following output-to-input frequency ratios: 8:1, 4:1, 2:1, 1:1, 1:2, 1:4, 1:8
- Cycle-to-cycle jitter: 35ps (maximum)
- Static phase offset: ±100ps
- Full 3.3V supply mode
- -40°C to +85°C ambient operating temperature
- Available in lead-free packages

Block Diagram

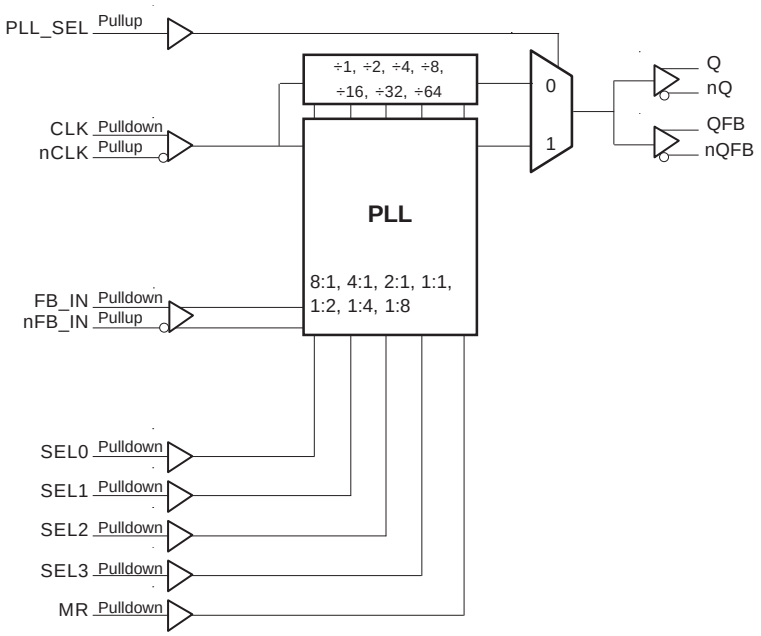

Pin Assignment

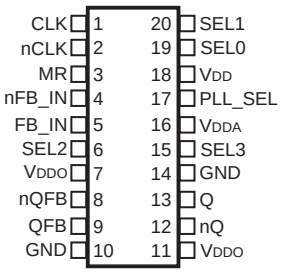

874S02I

20-Lead SOIC
7.5mm x 12.8mm x 2.3mm package body
M Package
Top View

Table 1. Pin Descriptions

Number	Name	Type		Description
1	CLK	Input	Pulldown	Non-inverting differential clock input.
2	nCLK	Input	Pullup	Inverting differential clock input.
3	MR	Input	Pulldown	Active HIGH Master Reset. When logic HIGH, the internal dividers are reset causing the true outputs Q and QFB to go low and the inverted outputs nQ and nQFB to go high. When logic LOW, the internal dividers and the outputs are enabled. LVCMOS / LVTTL interface levels.
4	nFB_IN	Input	Pullup	Inverting differential feedback input to phase detector for regenerating clocks with “Zero Delay.” Connect to pin 8.
5	FB_IN	Input	Pulldown	Non-inverted differential feedback input to phase detector for regenerating clocks with “Zero Delay.” Connect to pin 9.
6, 15, 19, 20	SEL2, SEL3, SEL0, SEL1	Input	Pulldown	Determines output divider values in Table 3. LVCMOS / LVTTL interface levels.
7, 11	V_{DDO}	Power		Output supply pins.
8, 9	nQFB, QFB	Output		Differential feedback output pair. LVDS interface levels.
10, 14	GND	Power		Power supply ground.
12, 13	nQ, Q	Output		Differential clock output pair. LVDS interface levels.
16	V_{DDA}	Power		Analog supply pin.
17	PLL_SEL	Input	Pullup	PLL select. Selects between the PLL and reference clock as the input to the dividers. When LOW, selects reference clock. When HIGH, selects PLL. LVCMOS/LVTTL interface levels.
18	V_{DD}	Power		Core supply pin.

NOTE: *Pullup and Pulldown* refer to internal input resistors. See Table 2, *Pin Characteristics,* for typical values.

Table 2. Pin Characteristics

Symbol	Parameter	Test Conditions	Minimum	Typical	Maximum	Units
C_{IN}	Input Capacitance			2		pF
R_{PULLUP}	Input Pullup Resistor			50		kΩ
$R_{PULLDOWN}$	Input Pulldown Resistor			50		kΩ

©2021 Renesas Electronics Corporation

Function Tables

Table 3A. Control Input Function Table

Inputs					Outputs PLL_SEL = 1 PLL Enable Mode
SEL3	SEL2	SEL1	SEL0	Reference Frequency Range (MHz)*	Q/nQ
0	0	0	0	500 - 1000	÷1
0	0	0	1	250 - 500	÷1
0	0	1	0	125 - 250	÷1
0	0	1	1	62.5 - 125	÷1
0	1	0	0	500 - 1000	÷2
0	1	0	1	250 - 500	÷2
0	1	1	0	125 - 250	÷2
0	1	1	1	500 - 1000	÷4
1	0	0	0	250 - 500	÷4
1	0	0	1	500 - 1000	÷8
1	0	1	0	250 - 500	x2
1	0	1	1	125 - 250	x2
1	1	0	0	62.5 - 125	x2
1	1	0	1	125 - 250	x4
1	1	1	0	62.5 - 125	x4
1	1	1	1	62.5 - 125	x8

*NOTE: VCO frequency range for all configurations above is 500MHz to 1GHz.

Table 3B. PLL Bypass Function Table

Inputs				Outputs PLL_SEL = 0 PLL Bypass Mode
SEL3	**SEL2**	**SEL1**	**SEL0**	**Q/nQ**
0z	0	0	0	÷4
0	0	0	1	÷4
0	0	1	0	÷4
0	0	1	1	÷8
0	1	0	0	÷8
0	1	0	1	÷8
0	1	1	0	÷16
0	1	1	1	÷16
1	0	0	0	÷32
1	0	0	1	÷64
1	0	1	0	÷2
1	0	1	1	÷2
1	1	0	0	÷4
1	1	0	1	÷1
1	1	1	0	÷2
1	1	1	1	÷1

©2021 Renesas Electronics Corporation

Absolute Maximum Ratings

NOTE: Stresses beyond those listed under *Absolute Maximum Ratings* may cause permanent damage to the device. These ratings are stress specifications only. Functional operation of product at these conditions or any conditions beyond those listed in the *DC Characteristics or AC Characteristics* is not implied. Exposure to absolute maximum rating conditions for extended periods may affect product reliability.

Item	Rating
Supply Voltage, V_{DD}	4.6V
Inputs, V_I	-0.5V to V_{DD} + 0.5V
Outputs, I_O (LVDS) Continuous Current Surge Current	 10mA 15mA
Package Thermal Impedance, θ_{JA}	64.7°C/W (0 lfpm)
Storage Temperature, T_{STG}	-65°C to 150°C

DC Electrical Characteristics

Table 4A. LVDS Power Supply DC Characteristics, $V_{DD} = V_{DDO} = 3.3V \pm 5\%$, T_A = -40°C to 85°C

Symbol	Parameter	Test Conditions	Minimum	Typical	Maximum	Units
V_{DD}	Core Supply Voltage		3.135	3.3	3.465	V
V_{DDA}	Analog Supply Voltage		V_{DD} – 0.20	3.3	V_{DD}	V
V_{DDO}	Output Supply Voltage		3.135	3.3	3.465	V
I_{DD}	Power Supply Current				97	mA
I_{DDA}	Analog Supply Current				20	mA
I_{DDO}	Output Supply Current				40	mA

Table 4B. LVCMOS/LVTTL DC Characteristics, $V_{DD} = V_{DDO} = 3.3V \pm 5\%$, T_A = -40°C to 85°C

Symbol	Parameter		Test Conditions	Minimum	Typical	Maximum	Units
V_{IH}	Input High Voltage			2.2		V_{DD} + 0.3	V
V_{IL}	Input Low Voltage			-0.3		0.8	V
I_{IH}	Input High Current	MR, SEL[0:3]	$V_{DD} = V_{IN} = 3.465V$			150	µA
		PLL_SEL	$V_{DD} = V_{IN} = 3.465V$			10	µA
I_{IL}	Input Low Current	MR, SEL[0:3]	$V_{DD} = 3.465V$, $V_{IN} = 0V$	-10			µA
		PLL_SEL	$V_{DD} = 3.465V$, $V_{IN} = 0V$	-150			µA

Table 4C. Differential DC Characteristics, $V_{DD} = V_{DDO} = 3.3V \pm 5\%$, T_A = -40°C to 85°C

Symbol	Parameter		Test Conditions	Minimum	Typical	Maximum	Units
I_{IH}	Input High Current	CLK, FB_IN	$V_{DD} = V_{IN} = 3.465V$			150	µA
		nCLK, nFB_IN	$V_{DD} = V_{IN} = 3.465V$			10	µA
I_{IL}	Input Low Current	CLK, FB_IN	$V_{DD} = 3.465V$, $V_{IN} = 0V$	-10			µA
		nCLK, nFB_IN	$V_{DD} = 3.465V$, $V_{IN} = 0V$	-150			µA
V_{PP}	Peak-to-Peak Input Voltage; NOTE 1			0.15		1.3	V
V_{CMR}	Common Mode Input Voltage; NOTE 1, 2			GND + 0.5		V_{DD} – 0.85	V

NOTE 1: V_{IL} should not be less than -0.3V.
NOTE 2: Common mode input voltage is defined as V_{IH}.

Table 4D. LVDS DC Characteristics, $V_{DD} = V_{DDO} = 3.3V \pm 5\%$, T_A = -40°C to 85°C

Symbol	Parameter	Test Conditions	Minimum	Typical	Maximum	Units
V_{OD}	Differential Output Voltage		350	450	550	mV
ΔV_{OD}	V_{OD} Magnitude Change				50	mV
V_{OS}	Offset Voltage		1.20	1.33	1.45	V
ΔV_{OS}	V_{OS} Magnitude Change				50	mV

Table 5. Input Frequency Characteristics, $V_{DD} = V_{DDO} = 3.3V \pm 5\%$, T_A = -40°C to 85°C

Symbol	Parameter		Test Conditions	Minimum	Typical	Maximum	Units
F_{IN}	Input Frequency	CLK/nCLK	PLL_SEL = 1	62.5		1000	MHz
			PLL_SEL = 0			1000	MHz

Table 6. AC Characteristics, $V_{DD} = V_{DDO} = 3.3V \pm 5\%$, T_A = -40°C to 85°C

Parameter	Symbol	Test Conditions	Minimum	Typical	Maximum	Units
f_{OUT}	Output Frequency		62.5		1000	MHz
*t*sk(Ø)	Static Phase Offset; NOTE 1, 2	PLL_SEL = 1	-100		100	ps
*t*jit(cc)	Cycle-to-Cycle Jitter; NOTE 2				35	ps
t_L	PLL Lock Time				1	ms
t_R / t_F	Output Rise/Fall Time	20% to 80%	50		250	ps
odc	Output Duty Cycle		47		53	%

NOTE: Electrical parameters are guaranteed over the specified ambient operating temperature range, which is established when device is mounted in a test socket with maintained transverse airflow greater than 500 lfpm. Device will meet specifications after thermal equilibrium has been reached under these conditions.
NOTE 1: Defined as the time difference between the input reference clock and the average feedback input signal, when the PLL is locked and the input reference frequency is stable.
NOTE 2: This parameter is defined in accordance with JEDEC Standard 65.

Parameter Measurement Information

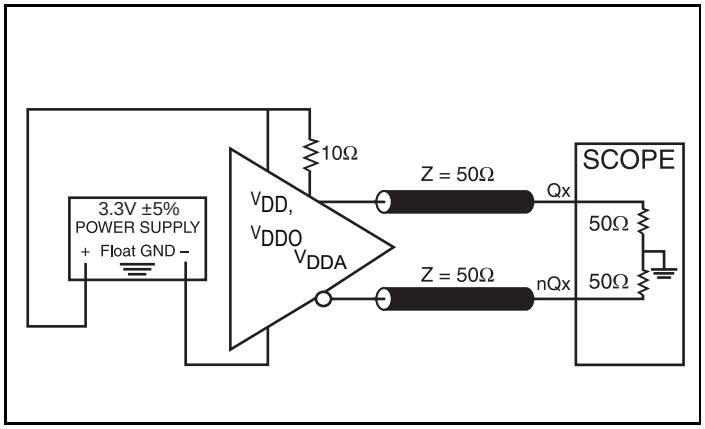

3.3V LVDS Output Load AC Test Circuit

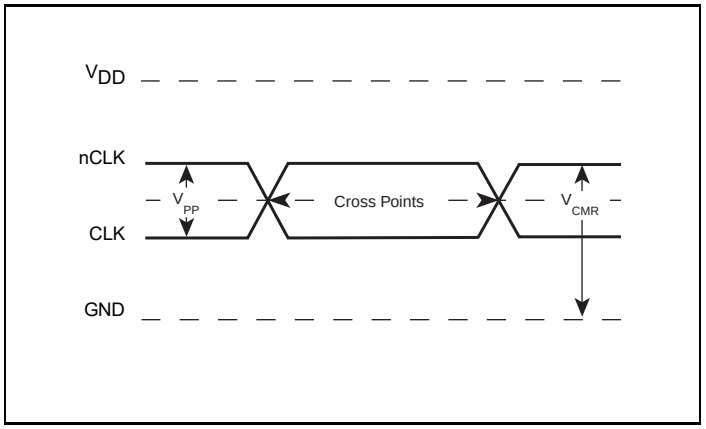

Differential Input Level

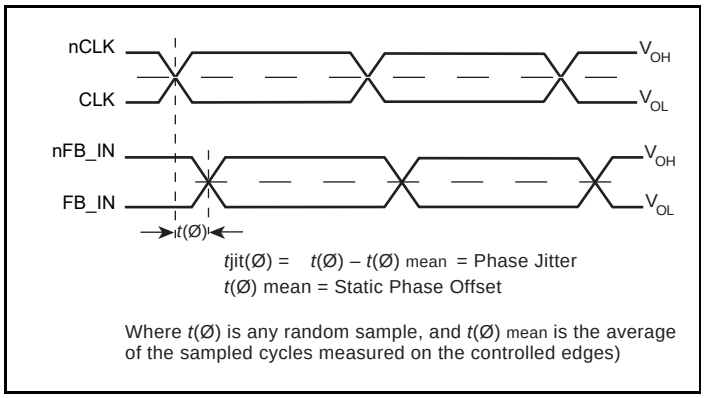

Static Phase Offset

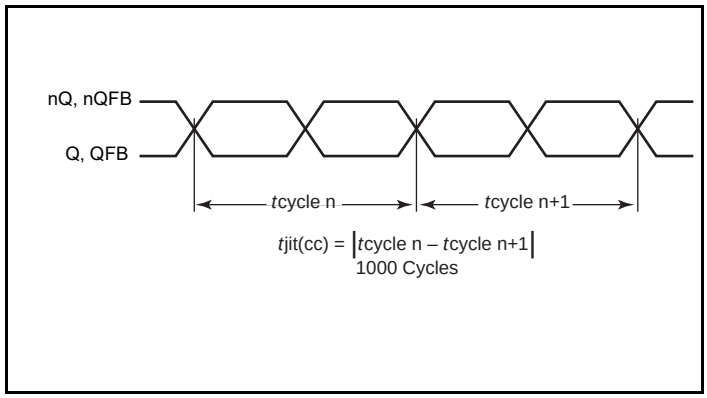

Cycle-to-Cycle Jitter

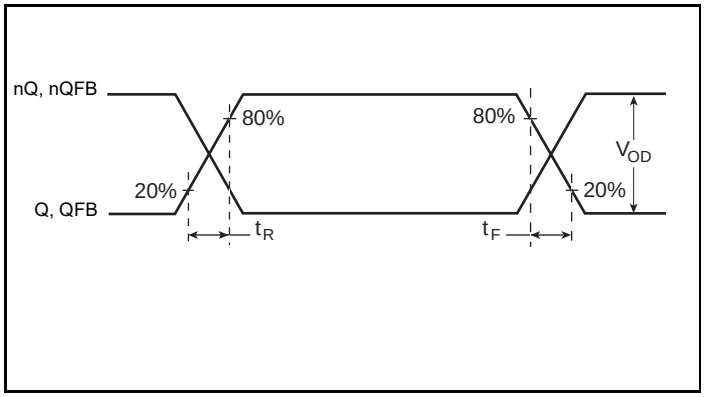

Output Rise/Fall Time

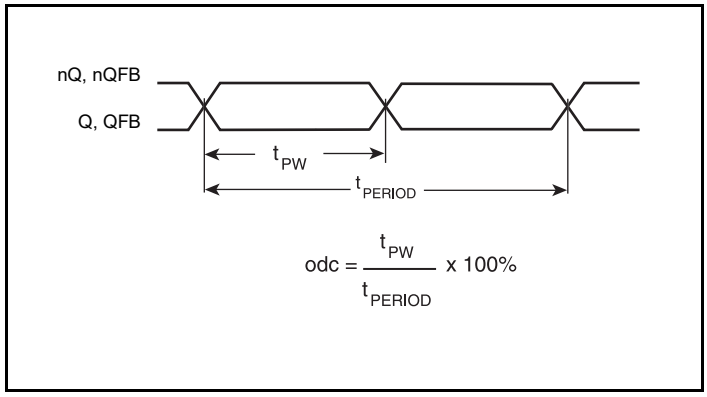

Output Duty Cycle/Pulse Width/Period

Parameter Measurement Information, continued

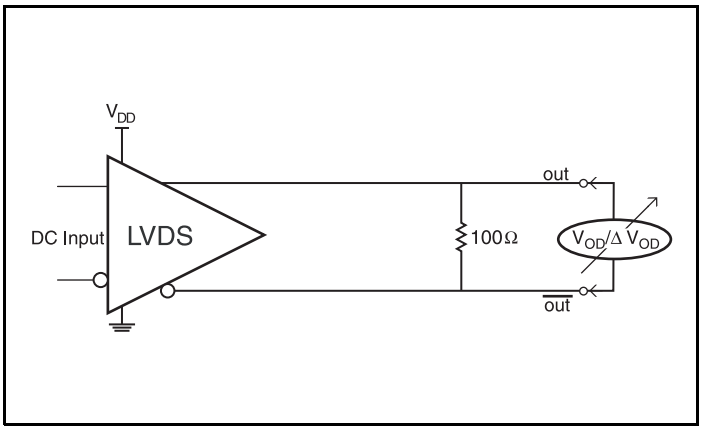

Differential Output Voltage Setup

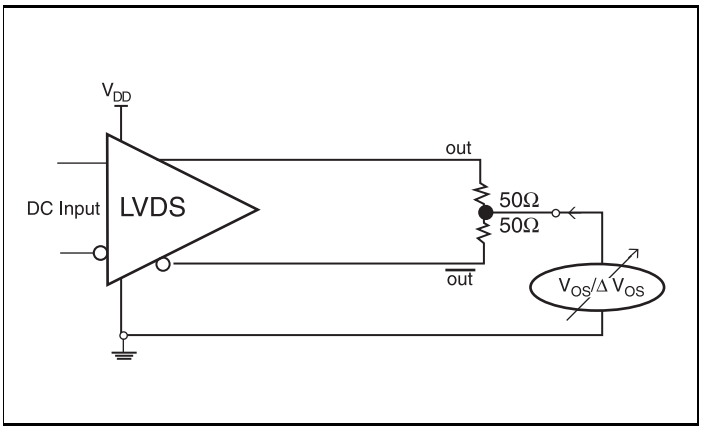

Offset Voltage Setup

Application Information

Recommendations for Unused Input and Output Pins

Inputs:

LVCMOS Control Pins

All control pins have internal pull-ups or pull-downs; additional resistance is not required but can be added for additional protection. A 1kΩ resistor can be used.

Outputs:

LVDS Outputs

All unused LVDS output pairs can be either left floating or terminated with 100Ω across. If they are left floating, there should be no trace attached.

Power Supply Filtering Technique

As in any high speed analog circuitry, the power supply pins are vulnerable to random noise. To achieve optimum jitter performance, power supply isolation is required. The 874S02I provides separate power supplies to isolate any high switching noise from the outputs to the internal PLL. V_{DD}, V_{DDA} and V_{DDO} should be individually connected to the power supply plane through vias, and 0.01µF bypass capacitors should be used for each pin. *Figure 1* illustrates this for a generic V_{DD} pin and also shows that V_{DDA} requires that an additional 10Ω resistor along with a 10µF bypass capacitor be connected to the V_{DDA} pin.

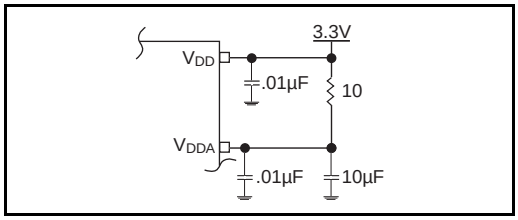

Figure 1. Power Supply Filtering

Wiring the Differential Input to Accept Single-Ended Levels

Figure 2 shows how the differential input can be wired to accept single-ended levels. The reference voltage V_REF = V_{DD}/2 is generated by the bias resistors R1, R2 and C1. This bias circuit should be located as close as possible to the input pin. The ratio of R1 and R2 might need to be adjusted to position the V_REF in the center of the input voltage swing. For example, if the input clock swing is only 2.5V and V_{DD} = 3.3V, V_REF should be 1.25V and R2/R1 = 0.609.

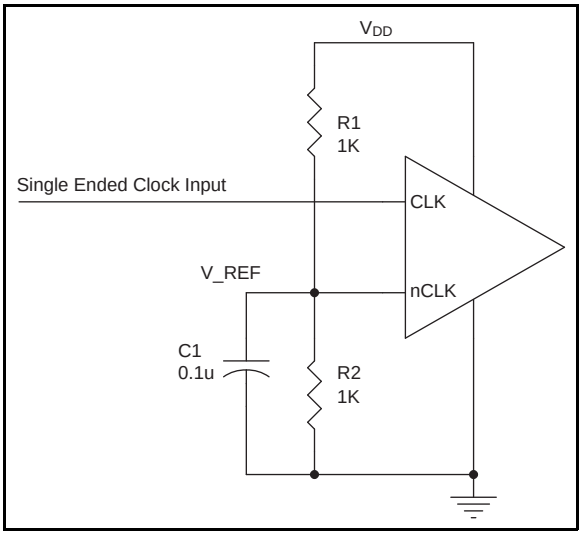

Figure 2. Single-Ended Signal Driving Differential Input

Differential Clock Input Interface

The CLK /nCLK accepts LVDS, LVPECL, LVHSTL, SSTL, and other differential signals. Both signals must meet the V_{PP} and V_{CMR} input requirements. *Figures 3A to 3E* show interface examples for the HiPerClockS CLK/nCLK input driven by the most common driver types. The input interfaces suggested here are examples only. Please consult with the vendor of the driver component to confirm the driver termination requirements. For example, in Figure 3A, the input termination applies for IDT HiPerClockS open emitter LVHSTL drivers. If you are using an LVHSTL driver from another vendor, use their termination recommendation.

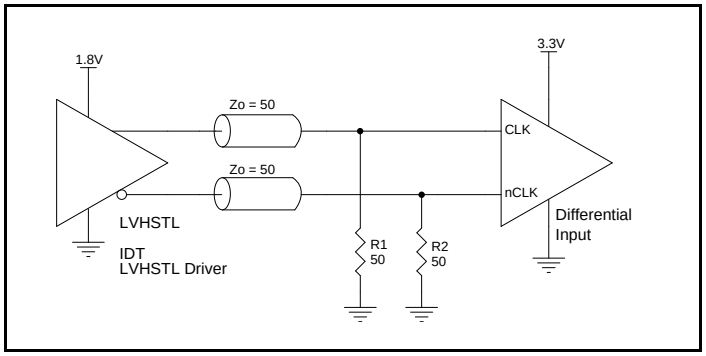

3A. HiPerClockS CLK/nCLK Input Driven by an IDT Open Emitter HiPerClockS LVHSTL Driver

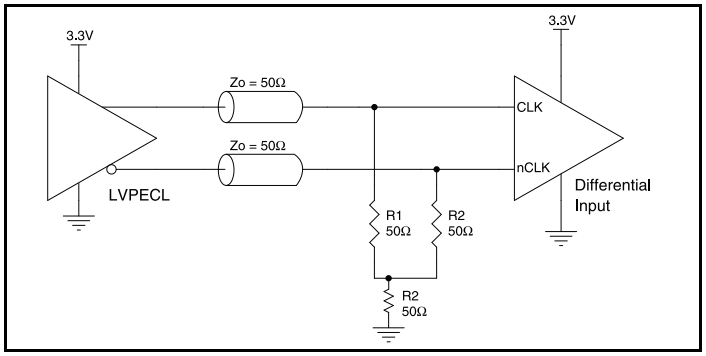

Figure 3B. HiPerClockS CLK/nCLK Input Driven by a 3.3V LVPECL Driver

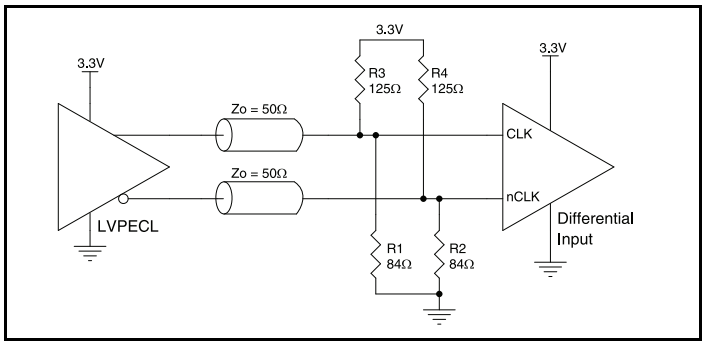

Figure 3C. HiPerClockS CLK/nCLK Input Driven by a 3.3V LVPECL Driver

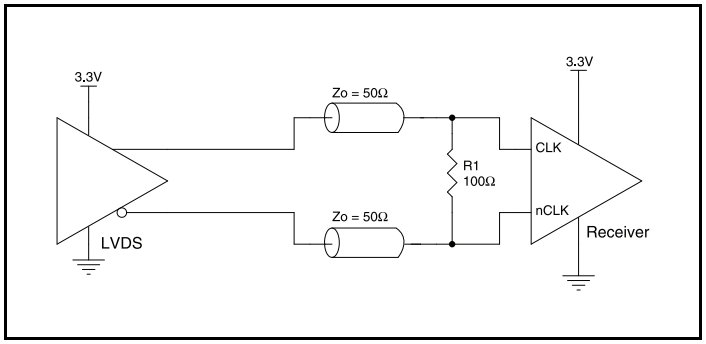

Figure 3D. HiPerClockS CLK/nCLK Input Driven by a 3.3V LVDS Driver

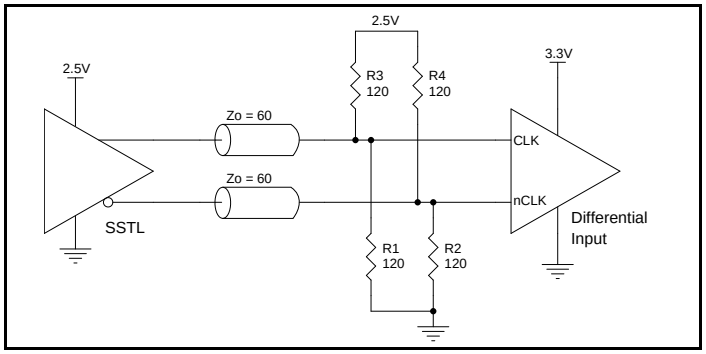

Figure 3E. HiPerClockS CLK/nCLK Input Driven by a 2.5V SSTL Driver

3.3V LVDS Driver Termination

A general LVDS interface is shown in *Figure 4.* In a 100Ω differential transmission line environment, LVDS drivers require a matched load termination of 100Ω across near the receiver input.

For a multiple LVDS outputs buffer, if only partial outputs are used, it is recommended to terminate the unused outputs.

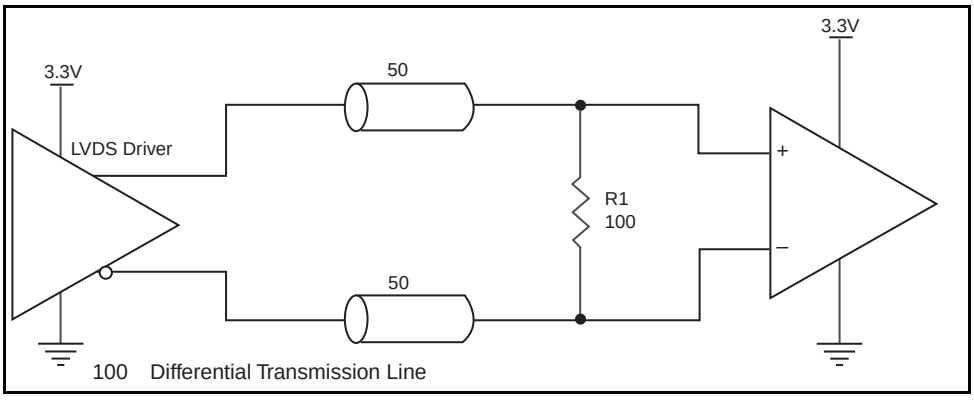

Figure 4. Typical LVDS Driver Termination

Schematic Example

The schematic of the 874S02I layout example is shown in *Figure 5A.* The 874S02I recommended PCB board layout for this example is shown in *Figure 5B.* This layout example is used as a general guideline. The layout in the actual system will depend on the selected component types and the density of the P.C. board.

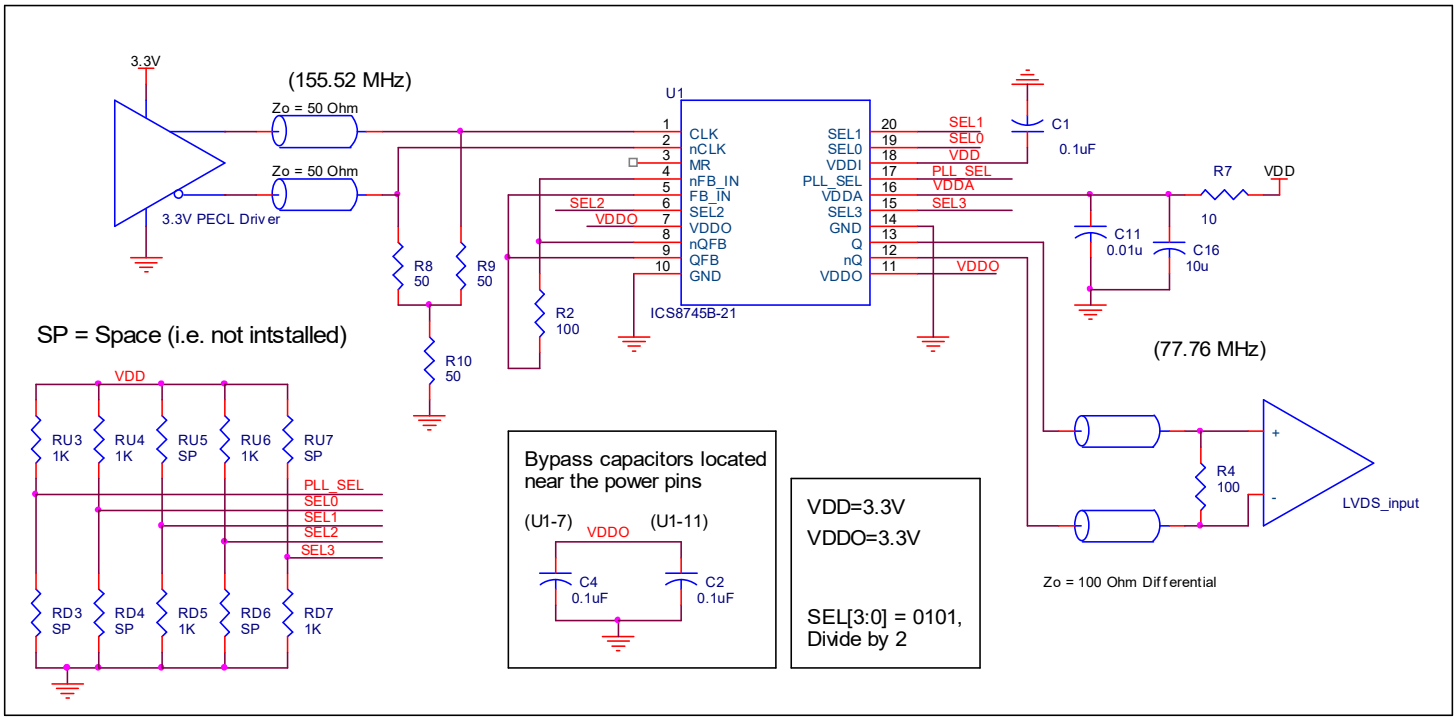

Figure 5A. 874S02I LVDS Zero Delay Buffer Schematic Example

The following component footprints are used in this layout example.

All the resistors and capacitors are size 0603.

Power and Grounding

Place the decoupling capacitors as close as possible to the power pins. If space allows, placement of the decoupling capacitor on the component side is preferred. This can reduce unwanted inductance between the decoupling capacitor and the power pin caused by the via.

Maximize the power and ground pad sizes and number of vias capacitors. This can reduce the inductance between the power and ground planes and the component power and ground pins.

The RC filter consisting of R7, C11, and C16 should be placed as close to the V_{DDA} pin as possible.

Clock Traces and Termination

Poor signal integrity can degrade the system performance or cause system failure. In synchronous high-speed digital systems, the clock signal is less tolerant to poor signal integrity than other signals. Any ringing on the rising or falling edge or excessive ring back can cause system failure. The shape of the trace and the trace delay might be restricted by the available space on the board and the component location. While routing the traces, the clock signal traces should be routed first and should be locked prior to routing other signal traces.

- The 100Ω differential output traces should have the same length.
- Avoid sharp angles on the clock trace. Sharp angle turns cause the characteristic impedance to change on the transmission lines.
- Keep the clock traces on the same layer. Whenever possible, avoid placing vias on the clock traces. Placement of vias on the traces can affect the trace characteristic impedance and hence degrade signal integrity.
- To prevent cross talk, avoid routing other signal traces in parallel with the clock traces. If running parallel traces is unavoidable, allow a separation of at least three trace widths between the differential clock trace and the other signal trace.
- Make sure no other signal traces are routed between the clock trace pair.
- The series termination resistors should be located as close to the driver pins as possible.

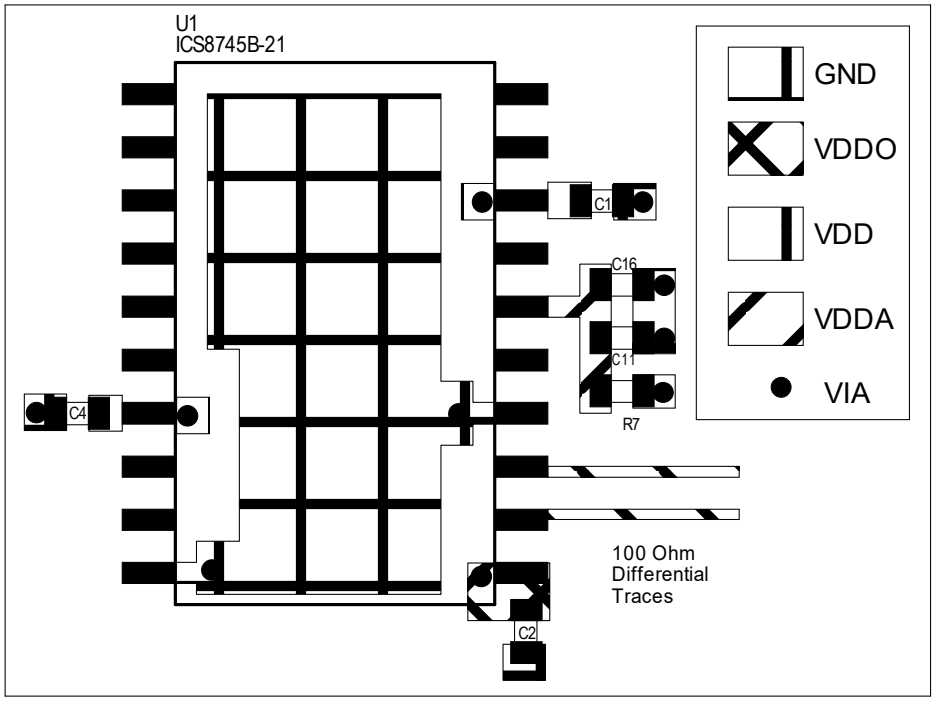

Figure 5B. PCB Board Layout for 874S02I

Power Considerations

This section provides information on power dissipation and junction temperature for the 874S02I.
Equations and example calculations are also provided.

1. Power Dissipation.

The total power dissipation for the 874S02I is the sum of the core power plus the analog power plus the power dissipated in the load(s). The following is the power dissipation for V_{DD} = 3.3V + 5% = 3.465V, which gives worst case results.

- The maximum current at 85°C is as follows:
  I_{DD_MAX} = 93mA
  I_{DDA_MAX} = 19mA
  I_{DDO_MAX} = 36mA
- Power (core)$_{MAX}$ = V_{DD_MAX} * (I_{DD_MAX} + I_{DDA_MAX}) = 3.465V * (93mA + 19mA) = **388.08mW**
- Power (outputs)$_{MAX}$ = V_{DDO_MAX} * I_{DDO_MAX} = 3.465V * 36mA = **124.74mW**

Total Power_$_{MAX}$ = 388.08mW + 124.74mW = **512.82mW**

•

2. Junction Temperature.

Junction temperature, Tj, is the temperature at the junction of the bond wire and bond pad and directly affects the reliability of the device. The maximum recommended junction temperature for HiPerClockS devices is 125°C.

The equation for Tj is as follows: Tj = θ_{JA} * Pd_total + T_A

Tj = Junction Temperature

θ_{JA} = Junction-to-Ambient Thermal Resistance

Pd_total = Total Device Power Dissipation (example calculation is in section 1 above)

T_A = Ambient Temperature

In order to calculate junction temperature, the appropriate junction-to-ambient thermal resistance θ_{JA} must be used. Assuming no air flow and a multi-layer board, the appropriate value is 64.7°C/W per Table 7 below.

Therefore, Tj for an ambient temperature of 85°C with all outputs switching is:

85°C + 0.513W * 64.7°C/W = 118.2°C. This is well below the limit of 125°C.

This calculation is only an example. Tj will obviously vary depending on the number of loaded outputs, supply voltage, air flow and the type of board (single layer or multi-layer).

Table 7. Thermal Resistance θ_{JA} for 20 Lead SOIC, Forced Convection

θ_{JA} by Velocity			
Linear Feet per Minute	**0**	**200**	**500**
Multi-Layer PCB, JEDEC Standard Test Boards	64.7°C/W	56.7°C/W	53.5°C/W

Reliability Information

Table 8. θ_{JA} vs. Air Flow Table for a 20 Lead SOIC

θ_{JA} by Velocity			
Linear Feet per Minute	**0**	**200**	**500**
Multi-Layer PCB, JEDEC Standard Test Boards	64.7°C/W	56.7°C/W	53.5°C/W

Transistor Count

The transistor count for 874S02I is: 1358

Package Outline Drawings

The package outline drawings are located at the end of this document and are accessible from the Renesas website (see Ordering Information for POD links). The package information is the most current data available and is subject to change without revision of this document.

Ordering Information

Table 10. Ordering Information

Part/Order Number	Marking	Package	Shipping Packaging	Temperature
874S02BMILF	ICS874S02BMILF	Lead-Free, 20 Lead SOIC	Tube	-40°C to 85°C
874S02BMILFT	ICS874S02BMILF	Lead-Free, 20 Lead SOIC	Tape & Reel	-40°C to 85°C

Revision History

Revision Date	Description of Change
July 6, 2021	▪ Updated pin descriptions for pins 8, 9 and 12, 13. ▪ Updated Package Outline Drawings section.
January 26, 2016	▪ Removed ICS from the part number where needed. ▪ General Description - Removed ICS Chip and HiPerClockS. ▪ Ordering Information - removed quantity from tape and reel. ▪ Updated data sheet header and footer.

BASED ON IEC 191-2Q: TYPE 075E04 B

DIMENSIONS IN MILLIMETERS

1. DIMENSIONS

REVISIONS			
REV	DESCRIPTION	DATE	APPROVED
00	INITIAL RELEASE	2/25/16	J.H

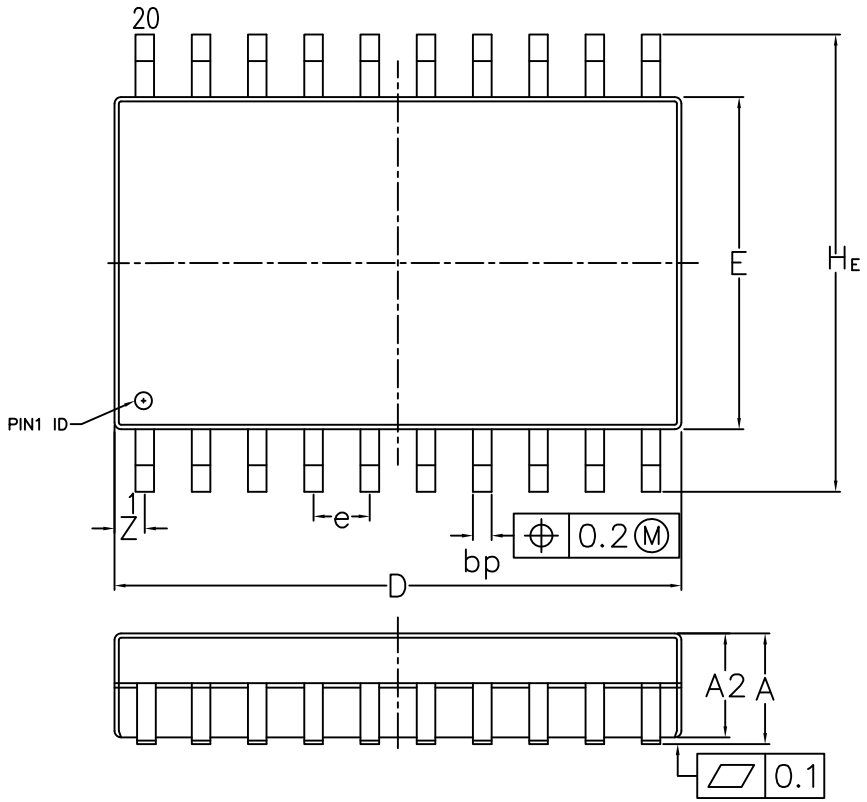

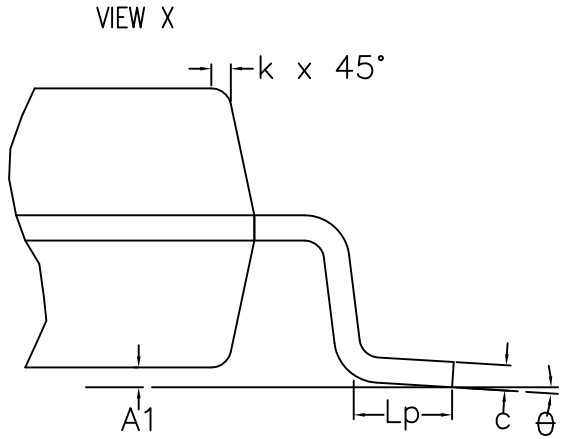

DIMENSIONS OF SUB-GROUP B1	
A max	2.65
bp min	0.35
bp max	0.49
e nom	1.27
H_E min	10.00
H_E max	10.65
Lpmin	0.40
Z max	0.81

DIMENSIONS OF SUB-GROUP C1	
A min	2.35
A1 min	0.10
A1 max	0.30
A2 min	2.25
A2 max	2.45
c min	0.23
c max	0.32
D min*	12.60
D max*	13.00
E min*	7.40
E max*	7.60
k min	0.25
θ max	0°
θ max	8°

2. WEIGHT ≤ 0.55 g
3. BODY MATERIAL LOW STRESS EPOXY
4. LEAD MATERIAL FeNi-ALLOY or Cu-ALLOY
5. LEAD FINISH SOLDER PLATING
6. LEAD FORM Z-BENDS

* WITHOUT MOLD FLASH

TOLERANCES UNLESS SPECIFIED
DECIMAL ANGULAR
XX± ±
XXX±
XXXX±

APPROVALS | DATE
DRAWN RAC 2/25/16
CHECKED

IDT™
www.IDT.com
6024 Silver Creek Valley Rd
San Jose, CA 95138
PHONE: (408) 284-8200
FAX: (408) 284-3572

TITLE PSG20 PACKAGE OUTLINE
300 mil SOP

SIZE C | DRAWING No. PSC-4007-02 | REV 00

DO NOT SCALE DRAWING | SHEET 1 OF 1

IMPORTANT NOTICE AND DISCLAIMER

RENESAS ELECTRONICS CORPORATION AND ITS SUBSIDIARIES (“RENESAS”) PROVIDES TECHNICAL SPECIFICATIONS AND RELIABILITY DATA (INCLUDING DATASHEETS), DESIGN RESOURCES (INCLUDING REFERENCE DESIGNS), APPLICATION OR OTHER DESIGN ADVICE, WEB TOOLS, SAFETY INFORMATION, AND OTHER RESOURCES “AS IS” AND WITH ALL FAULTS, AND DISCLAIMS ALL WARRANTIES, EXPRESS OR IMPLIED, INCLUDING, WITHOUT LIMITATION, ANY IMPLIED WARRANTIES OF MERCHANTABILITY, FITNESS FOR A PARTICULAR PURPOSE, OR NON-INFRINGEMENT OF THIRD PARTY INTELLECTUAL PROPERTY RIGHTS.

These resources are intended for developers skilled in the art designing with Renesas products. You are solely responsible for (1) selecting the appropriate products for your application, (2) designing, validating, and testing your application, and (3) ensuring your application meets applicable standards, and any other safety, security, or other requirements. These resources are subject to change without notice. Renesas grants you permission to use these resources only for development of an application that uses Renesas products. Other reproduction or use of these resources is strictly prohibited. No license is granted to any other Renesas intellectual property or to any third party intellectual property. Renesas disclaims responsibility for, and you will fully indemnify Renesas and its representatives against, any claims, damages, costs, losses, or liabilities arising out of your use of these resources. Renesas' products are provided only subject to Renesas' Terms and Conditions of Sale or other applicable terms agreed to in writing. No use of any Renesas resources expands or otherwise alters any applicable warranties or warranty disclaimers for these products.

(Rev.1.0 Mar 2020)

Corporate Headquarters

TOYOSU FORESIA, 3-2-24 Toyosu,
Koto-ku, Tokyo 135-0061, Japan
www.renesas.com

Contact Information

For further information on a product, technology, the most up-to-date version of a document, or your nearest sales office, please visit:
www.renesas.com/contact/

Trademarks

Renesas and the Renesas logo are trademarks of Renesas Electronics Corporation. All trademarks and registered trademarks are the property of their respective owners.

© 2021 Renesas Electronics Corporation. All rights reserved.