ORDER NO.	WOODHEAD NO.	COLOR	GRADE
130144-0057	5369	BLACK	STANDARD
130144-0060	5369YL	YELLOW	STANDARD
130144-0084	85369	BLACK	HOSPITAL

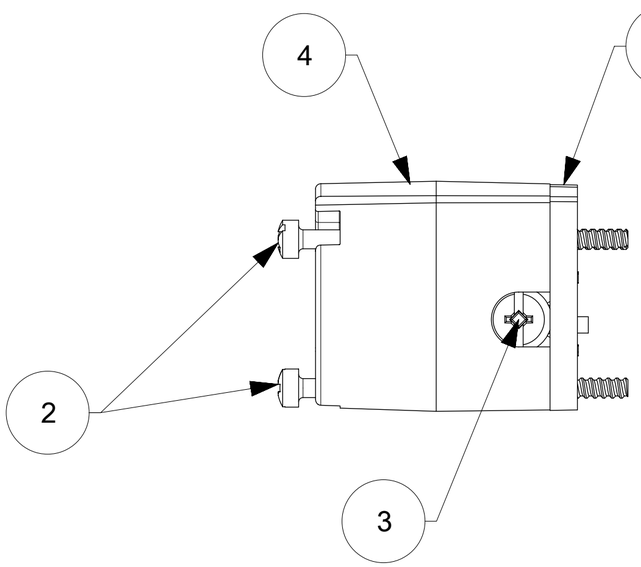

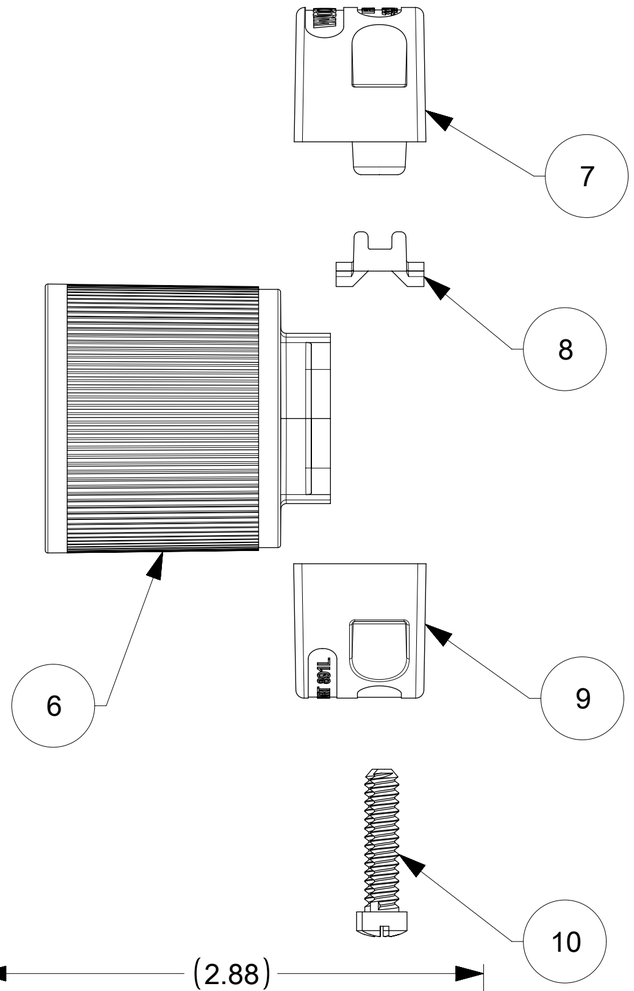

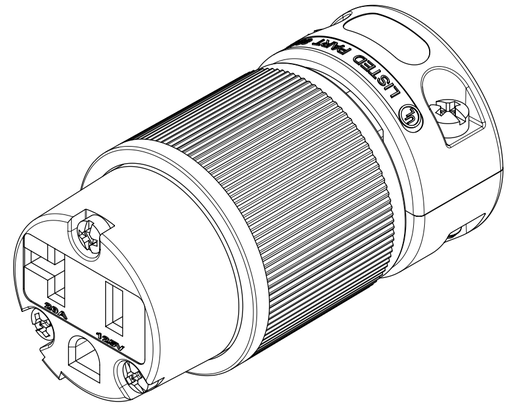

GREEN DOT LOCATION
FOR HOSPITAL GRADE
P/N 85369XX ONLY

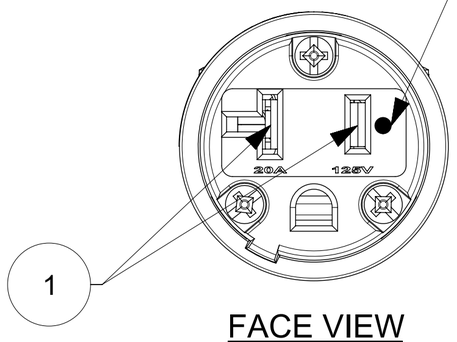

FACE VIEW

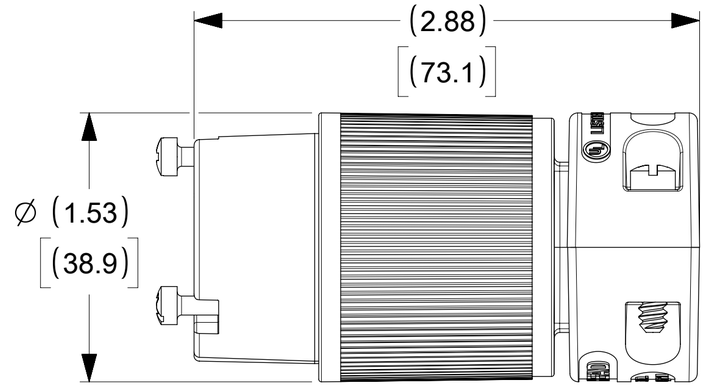

WIRING TERMINATION

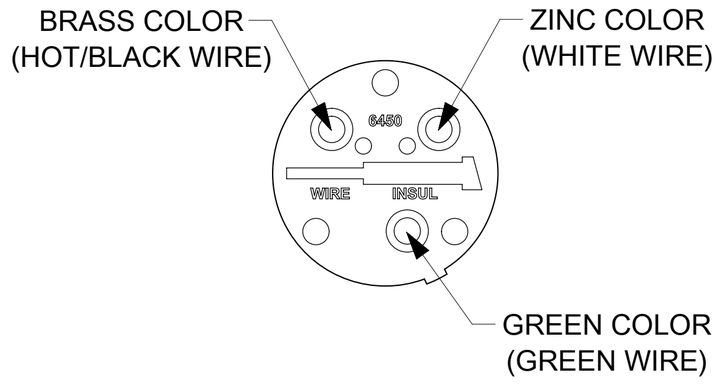

ITEM NO.	DESCRIPTIONS	MATERIAL	QTY.
1	BLADES	BRASS	3
2	RETAINING SCREWS	STAINLESS STEEL	3
3	TERMINAL SCREWS/CLAMP ASSEMBLY	BRASS, ZINC PLATED	3
4	INSERT; WHITE	NYLON	1
5	TERMINAL COVER	POLYCARBONATE	1
6	HOUSING; BLACK	NYLON	1
7	CLAMP CORD MALE; WHITE	NYLON	1
8	CLAMP CORD INSERT	NYLON	1
9	CLAMP CORD FEMALE; WHITE	NYLON	1
10	RETAINING SCREWS	STEEL, ZINC PLATED	2

DOCUMENT STATUS	P1	RELEASE DATE	2020/01/25 01:04:08

SYMBOLS: FA = 0, FC = 0, FP = 0, S = 0, ▼ = 0, C = 0, ☒ = 0, ■ = 0, C = 0

THIS DRAWING CONTAINS INFORMATION THAT IS PROPRIETARY TO MOLEX ELECTRONIC TECHNOLOGIES, LLC AND SHOULD NOT BE USED WITHOUT WRITTEN PERMISSION

DIMENSION UNITS: INCH[MM] | SCALE: NTS

GENERAL TOLERANCES (UNLESS SPECIFIED)

	MM	INCH
4 PLACES	±	±
3 PLACES	±	±
2 PLACES	±	±
1 PLACE	±	±
0 PLACES	±	±
ANGULAR TOL	±	°

DRAFT WHERE APPLICABLE MUST REMAIN WITHIN DIMENSIONS

CURRENT REV DESC: NEW RELEASE

EC NO: 613441
DRWN: VBASUTHKARP 2019/02/06
CHK'D: DNGUYEN62 2019/10/30
APPR: HKNEELAND 2020/01/25

INITIAL REVISION:
DRWN: VBASUTHKARP 2019/02/06
APPR: HKNEELAND 2020/01/25

THIRD ANGLE PROJECTION | DRAWING: C-SIZE | SERIES: 130144

molex

SAFEWAY CONNECTOR 2P3W 5-20

PRODUCT CUSTOMER DRAWING

DOCUMENT NUMBER	DOC TYPE	DOC PART	REVISION
1301440057	PSD	000	A

MATERIAL NUMBER	CUSTOMER	SHEET NUMBER
SEE TABLE	GENERAL MARKET	1 OF 1

FORMAT: Eng-lega-master-tb-prod-C
REVISION: D
DATE: 2018/01/18