600mA Step-down DC/DC Converter with Synchronous Rectifier Evaluation Board

NO.EEV-305-033-190222

RP507K001B033-EV is the evaluation board for RP507 which has the below features, benefits and specifications.

OUTLINE

The RP507K001B is a CMOS-based 600mA(1) step-down DC/DC converter with synchronous rectifier. Internally, a single converter consists of an oscillator, a reference voltage unit, an error amplifier, a switching control circuit, a soft-start circuit, an under voltage lockout (UVLO) circuit, an over current protection circuit, a thermal shutdown circuit and switching transistors.

Replacing diodes with built-in switching transistors improves the efficiency of rectification. Therefore, by simply using an inductor, resistors and capacitors as the external components, a low ripple high efficiency synchronous rectifier step-down DC/DC converter can be easily configured.

The RP507K001B has an over current protection circuit which supervises the inductor peak current in each switching cycle, and turns the high-side driver off if the current exceeds the Lx current limit. The RP507K001B also contains a thermal shutdown circuit which detects overheating of the converter and stops the converter operation to protect it from damage if the junction temperature exceeds the specified temperature.

The RP507K001B is PWM/VFM auto switching control in which mode automatically switches from PWM mode to high-efficiency VFM mode in low output current.

The RP507K001B is available in DFN(PLP)1616-6D package which achieves high-density mounting on boards. For an input capacitor (CIN) and an output capacitor (COUT), the smaller sized 0402/1005 (inch/ mm) capacitor can be used. Output voltage is adjustable with external divider resistors.

FEATURES

- Input Voltage Range ..... 2.3V to 5.5V (Absolute maximum rating: 6.5V)
- Output Voltage Range ..... 0.7V to 5.5V
  (Note: As for 1.0V or less, input voltage range is limited.)
- Feedback Voltage Accuracy ..... ±9mV (V_{FB}=0.6V)
- Temperature-Drift Coefficient of Feedback Voltage
  ..... Typ. ±100ppm/°C
- Oscillator Frequency ..... Typ. 2.0MHz
- Maximum Duty Cycle 100%
- Built-in Driver ON Resistance ..... Typ. Pch. 0.38Ω, Nch. 0.3Ω (V_{IN}=3.6V)
- Supply Current (at no load) ..... Typ. 34μA
- Standby Current ..... Max. 5μA
- UVLO Detector Threshold ..... Typ. 2.0V

(1) This is an approximate value, because output current depends on conditions and external components.

- Soft-start Time..... Typ. 150μs
- Lx Current Limit Circuit..... Typ. 1A
- Package ..... DFN(PLP)1616-6D
- For more details on RP507 IC, please refer to https://www.nisshinbo-microdevices.co.jp/en/products/power/dcdc/rp507/rp507-ea.pdf.

Part Number Information

Product Name	Package
RP507K001B033-TR	DFN(PLP)1616-6D

001B: with auto-discharge function

033: 3.3 V, Output voltage

.

PCB LAYOUT

Topside	Backside
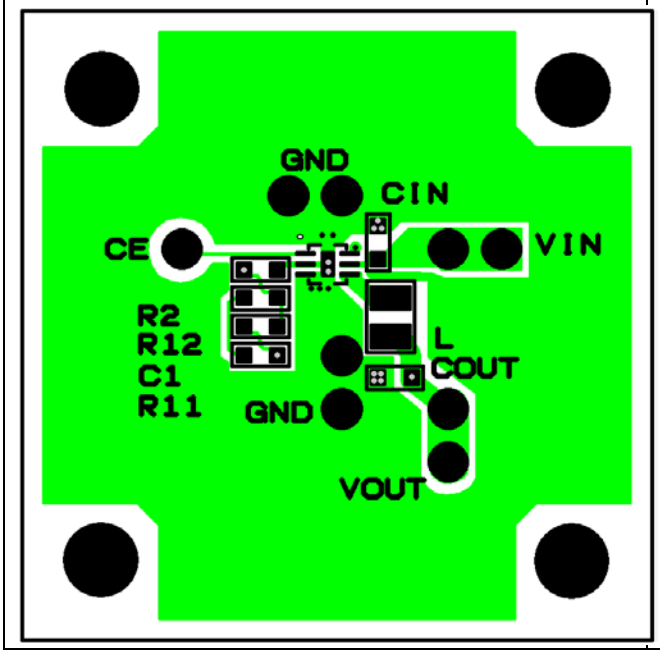	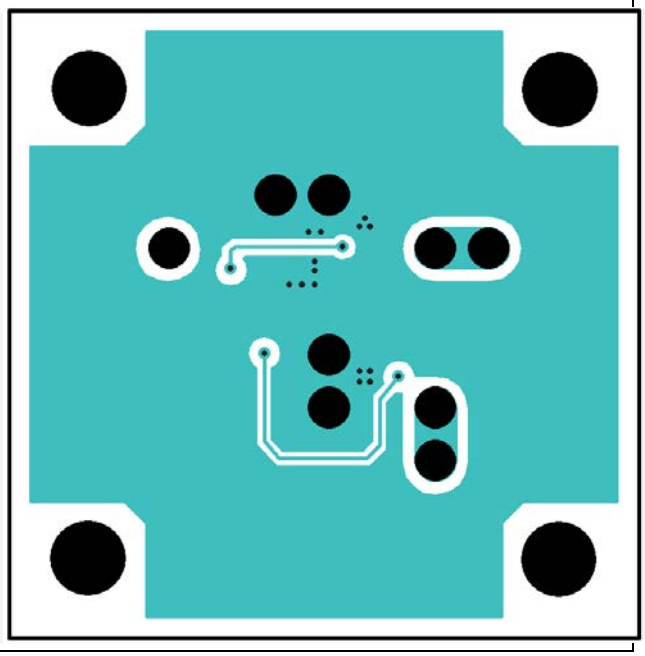

R11 and R12 are arranged as a substitute for R1 so that two resistors can be connected in series.

PIN DESCRIPTION

● **DFN(PLP)1616-6D**

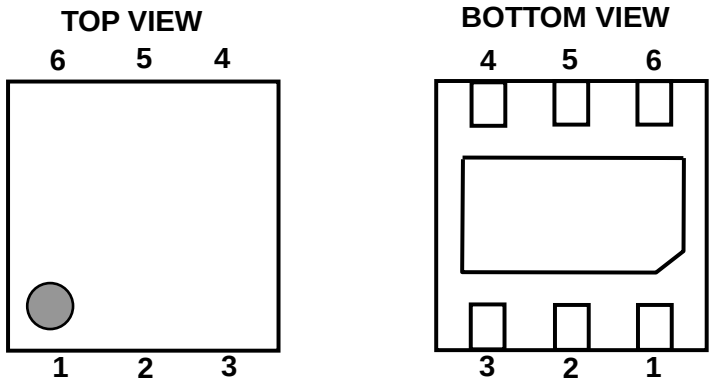

Pin Description

Pin No.	Symbol	Description
1	CE	Chip Enable Pin ("H" Active)
2	AGND	Ground Pin(1)
3	PGND	Ground Pin (1)
4	L_X	L_X Switching Pin
5	V_{IN}	Input Pin
6	V_{FB}	Feedback Pin

The exposed tab on the bottom of the package enhances thermal performance and is electrically connected to GND (substrate level). It is recommended that the exposed tab be connected to the ground plane on the board or otherwise be left open.

(1) No.2 pin and No.3 pin must be wired to the GND plane when mounting on boards.

ABSOLUTE MAXIMUM RATINGS

Absolute Maximum Ratings (AGND=PGND=0V)

Symbol	Item	Rating	Unit
V_{IN}	V_{IN} Input Voltage	-0.3 to 6.5	V
V_{LX}	L_X Pin Voltage	-0.3 to V_{IN} + 0.3	V
V_{CE}	CE Pin Input Voltage	-0.3 to 6.5	V
V_{FB}	V_{FB} Pin Voltage	-0.3 to 6.5	V
I_{LX}	L_X Pin Output Current	1	A
P_D	Power Dissipation(1)(DFN(PLP)1616-6D, JEDEC STD. 51-7)	1580	mW
Tj	Junction Temperature	-40 to 125	°C
Tstg	Storage Temperature Range	-55 to 125	°C

ABSOLUTE MAXIMUM RATINGS

Electronic and mechanical stress momentarily exceeded absolute maximum ratings may cause the permanent damages and may degrade the life time and safety for both device and system using the device in the field.
The functional operation at or over these absolute maximum ratings are not assured.

RECOMMENDED OPERATING CONDITIONS

Recommended Operating Conditions

Symbol	Item		Rating	Unit
V_{IN}	Input Voltage	1.0V ≤ V_{SET}(2)	2.3 to 5.5	V
		0.9V ≤ V_{SET} < 1.0V	2.3 to 5.25	
		0.7V ≤ V_{SET} < 0.9V	2.3 to 4.5	
Ta	Operating Temperature Range		−40 to 85	°C

RECOMMENDED OPERATING CONDITIONS

All of electronic equipment should be designed that the mounted semiconductor devices operate within the recommended operating conditions. The semiconductor devices cannot operate normally over the recommended operating conditions, even if when they are used over such ratings by momentary electronic noise or surge. And the semiconductor devices may receive serious damage when they continue to operate over the recommended operating conditions.

(1) Refer to *POWER DISSIPATION* for detailed information.
(2) V_{SET}= Set Output Voltage

ELECTRICAL CHARACTERISTICS

● **RP507K001B** (Ta=25°C)

Symbol	Item	Conditions	Min.	Typ.	Max.	Unit
V_{FB}	Feedback Output Voltage	V_{IN}=V_{CE}=3.6V	0.591	0.600	0.609	V
$\Delta V_{FB}/\Delta T$	Feedback Output Voltage Temperature Coefficient	-40ºC ≤ Ta ≤ 85ºC		±100		ppm/°C
fosc	Oscillator Frequency	V_{IN}=V_{CE}=3.6V (V_{SET}[1]≤2.6V), V_{IN}=V_{CE}=V_{SET}+1V (V_{SET}>2.6V)	1.7	2.0	2.3	MHz
I_{DD}	Supply Current	V_{IN}=V_{CE}=V_{FB}=3.6V		32	45	µA
Istandby	Standby Current	V_{IN}=5.5V, V_{CE}=0V		0	5	µA
I_{CEH}	CE "H" Input Current	V_{IN}=V_{CE}=5.5V	-1	0	1	µA
I_{CEL}	CE "L" Input Current	V_{IN}=5.5V, V_{CE}=0V	-1	0	1	µA
I_{VFBH}	VFB "H" Input Current	V_{IN}=V_{FB}=5.5V,V_{CE}=0V	-1	0	1	µA
I_{VFBL}	VFB "L" Input Current	V_{IN}=5.5V, V_{CE}=V_{FB}=0V	-1	0	1	µA
tdis	Auto Discharge Time[2]	V_{IN}=2.3V, V_{CE}=0V, C_{OUT}=10µF		5	10	ms
$I_{LXLEAKH}$	L_X Leakage Current "H"	V_{IN}=V_{LX}=5.5V,V_{CE}=0V	-1	0	5	µA
$I_{LXLEAKL}$	L_X Leakage Current "L"	V_{IN}=5.5V, V_{CE}=V_{LX}=0V	-5	0	1	µA
V_{CEH}	CE "H" Input Voltage	V_{IN}=5.5V	1.0			V
V_{CEL}	CE "L" Input Voltage	V_{IN}=2.3V			0.4	V
R_{ONP}	On Resistance of Pch Tr.	V_{IN}=3.6V, I_{LX}=−100mA		0.38		Ω
R_{ONN}	On Resistance of Nch Tr.	V_{IN}=3.6V, I_{LX}=−100mA		0.3		Ω
Maxduty	Maximum Duty Cycle		100			%
tstart	Soft-start Time	V_{IN}=V_{CE}=3.6V (V_{SET}≤2.6V), V_{IN}=V_{CE}=V_{SET}+1V (V_{SET}>2.6V)		150	300	µs
I_{LXLIM}	L_X Current Limit	V_{IN}=V_{CE}=3.6V (V_{SET}≤2.6V), V_{IN}=V_{CE}=V_{SET}+1V (V_{SET}>2.6V)	800	1000		mA
V_{UVLO1}	UVLO Detector Threshold	V_{IN}=V_{CE}	1.9	2.0	2.1	V
V_{UVLO2}	UVLO Released Voltage	V_{IN}=V_{CE}	2.0	2.1	2.2	V
T_{TSD}	Thermal Shutdown Temperature	Junction Temperature		140		°C
T_{TSR}	Thermal Shutdown Released Temperature	Junction Temperature		100		°C

Note: Test circuit is "OPEN LOOP" and AGND=PGND=0V unless otherwise specified.

(1) V_{SET}= Set Output Voltage

(2) It starts when the CE pin is low and ends when V_{OUT} ≤ V_{SET} x 0.1.

APPLICATION INFORMATION

Typical Application

(Adjustable Output Voltage Type)

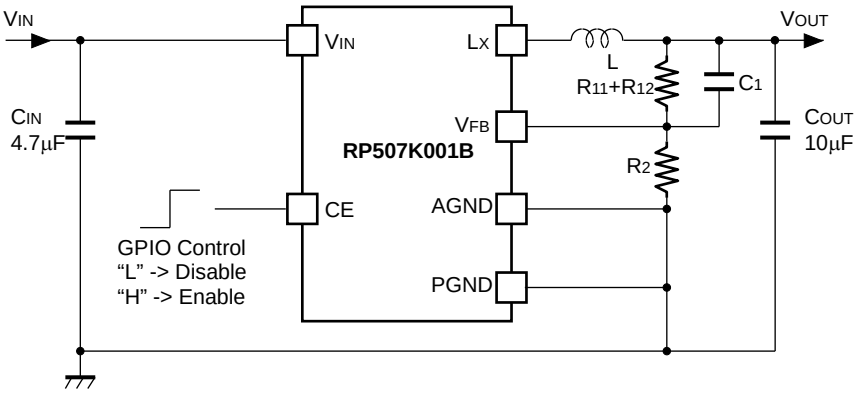

Recommended Components[*1]

Symbol	Value
C_{IN}	4.7μF
C_{OUT}	10μF
L	4.7μH
C_1	15pF
R_{11}	270kΩ
R_{12}	0Ω
R_2	60kΩ (120kΩ||120kΩ)

[*1] The bill of materials will be attached on the shipment of each purchased evaluation board.

TECHNICAL NOTES

When using the RP507K001B, please consider the following points.

- The Inductance value should be set within the range of 1.5µH to 4.7µH. However, the inductance value is limited by output voltage, so please refer to the table below. The phase compensation of this IC is designed according to the C_{OUT} and L values. Choose an inductor that has small DC resistance, has enough allowable current and is hard to cause magnetic saturation. If the inductance value of an inductor is extremely small, the peak current of L_X may increase. The increased L_X peak current reaches "L_X limit current" to trigger over current protection circuit even if the load current is less than 600mA.

Table 1. Set Output Voltage Range vs. Inductance Range

Set Output Voltage (V)	Inductance		
V_{SET}	L=1.5µH	L=2.2µH	L=4.7µH
0.7~1.0	Ok	Good	-
1.1~1.7	-	Good	-
1.8~2.5	-	Good	Ok
2.6~	-	Ok	Good

- Over current protection circuit may be affected by self-heating or power dissipation environment.

- The output voltage (V_{OUT}) is adjustable by changing the R_1 and R_2 values as follows.

$$V_{OUT} = V_{FB} \times (R_1 + R_2) / R_2 \qquad (0.7V \leq V_{OUT} \leq 5.5V)$$

- The recommended resistance values for R_1, R_2 and C_1 are as follows.

Table 2. Set Output Voltage Range vs. Resistor & Capacitor Range

Set Output Voltage (V)	Resistor (kΩ)		Capacitor (pF)
V_{SET}	R_1	R_2	C_1
1.0	120	180	22
1.2	180	180	22
1.5	270	180	22
1.8	240	120	22
2.5	380	120	15
2.8	275	75	15
3.3	270	60	15

★ The performance of power source circuits using this IC largely depends on the peripheral circuits. When selecting the peripheral components, please consider the conditions of use. Do not allow each component, PCB pattern and the IC to exceed their respected rated values (voltage, current, and power) when designing the peripheral circuits.

1. The products and the product specifications described in this document are subject to change or discontinuation of production without notice for reasons such as improvement. Therefore, before deciding to use the products, please refer to our sales representatives for the latest information thereon.
2. The materials in this document may not be copied or otherwise reproduced in whole or in part without prior written consent of our company.
3. Please be sure to take any necessary formalities under relevant laws or regulations before exporting or otherwise taking out of your country the products or the technical information described herein.
4. The technical information described in this document shows typical characteristics of and example application circuits for the products. The release of such information is not to be construed as a warranty of or a grant of license under our company's or any third party's intellectual property rights or any other rights.
5. The products listed in this document are intended and designed for use as general electronic components in standard applications (office equipment, telecommunication equipment, measuring instruments, consumer electronic products, amusement equipment etc.). Those customers intending to use a product in an application requiring extreme quality and reliability, for example, in a highly specific application where the failure or misoperation of the product could result in human injury or death (aircraft, spacevehicle, nuclear reactor control system, traffic control system, automotive and transportation equipment, combustion equipment, safety devices, life support system etc.) should first contact us.
6. We are making our continuous effort to improve the quality and reliability of our products, but semiconductor products are likely to fail with certain probability. In order to prevent any injury to persons or damages to property resulting from such failure, customers should be careful enough to incorporate safety measures in their design, such as redundancy feature, fire containment feature and fail-safe feature. We do not assume any liability or responsibility for any loss or damage arising from misuse or inappropriate use of the products.
7. Anti-radiation design is not implemented in the products described in this document.
8. The X-ray exposure can influence functions and characteristics of the products. Confirm the product functions and characteristics in the evaluation stage.
9. WLCSP products should be used in light shielded environments. The light exposure can influence functions and characteristics of the products under operation or storage.
10. There can be variation in the marking when different AOI (Automated Optical Inspection) equipment is used. In the case of recognizing the marking characteristic with AOI, please contact our sales or our distributor before attempting to use AOI.
11. Please contact our sales representatives should you have any questions or comments concerning the products or the technical information.

NISSHINBO

Nisshinbo Micro Devices Inc.

Official website
https://www.nisshinbo-microdevices.co.jp/en/
Purchase information
https://www.nisshinbo-microdevices.co.jp/en/buy/