DDR4 SDRAM

MT40A4G4
MT40A2G8
MT40A1G16

Features

- $V_{DD} = V_{DDQ} = 1.2V \pm 60mV$
- $V_{PP} = 2.5V, -125mV, +250mV$
- On-die, internal, adjustable V_{REFDQ} generation
- 1.2V pseudo open-drain I/O
- T_C maximum up to 95°C
  – 64ms, 8192-cycle refresh up to 85°C
  – 32ms, 8192-cycle refresh at >85°C to 95°C
- 16 internal banks (x4, x8): 4 groups of 4 banks each
- 8 internal banks (x16): 2 groups of 4 banks each
- 8*n*-bit prefetch architecture
- Programmable data strobe preambles
- Data strobe preamble training
- Command/Address latency (CAL)
- Multipurpose register READ and WRITE capability
- Write leveling
- Self refresh mode
- Low-power auto self refresh (LPASR)
- Temperature controlled refresh (TCR)
- Fine granularity refresh
- Self refresh abort
- Maximum power saving
- Output driver calibration
- Nominal, park, and dynamic on-die termination (ODT)
- Data bus inversion (DBI) for data bus
- Command/Address (CA) parity
- Databus write cyclic redundancy check (CRC)
- Per-DRAM addressability
- Connectivity test
- JEDEC JESD-79-4 compliant
- sPPR and hPPR capability
- MBIST-PPR support (Die Revision F only)

Options[1]	Marking
• Configuration	
– 4 Gig x 4	4G4
– 2 Gig x 8	2G8
– 1 Gig x 16	1G16
• 78-ball FBGA package (Pb-free) – x4, x8	
– 10mm x 11mm – Rev. B	VA
– 9mm x 11mm – Rev. E	JC
– 7.5mm x 11mm – Rev. F	SA
• 96-ball FBGA package (Pb-free) – x16	
– 10mm x 13mm – Rev. B	RC
– 9mm x 13mm – Rev. E	KD
– 7.5mm x 13mm – Rev. F	TB
• Timing – cycle time	
– 0.625ns @ CL = 22 (DDR4-3200)	-062E
– 0.682ns @ CL = 21 (DDR4-2933)	-068
• Operating temperature	
– Commercial ($0° \le T_C \le 95°C$)	None
– Industrial ($-40° \le T_C \le 95°C$)	IT
• Die Revision	:B, :E, :F

Notes: 1. Not all options listed can be combined to define an offered product. Use the part catalog search on http://www.micron.com for available offerings.

Table 1: Key Timing Parameters

Speed Grade[1]	Data Rate (MT/s)	Target CL-*n*RCD-*n*RP	^tAA (ns)	^tRCD (ns)	^tRP (ns)
-062E	3200	22-22-22	13.75	13.75	13.75
-068	2933	21-21-21	14.32 (13.75)	14.32 (13.75)	14.32 (13.75)

Notes: 1. Refer to the Speed Bin Tables for additional details.

Micron Technology, Inc. reserves the right to change products or specifications without notice.
© 2018 Micron Technology, Inc. All rights reserved.
Products and specifications discussed herein are subject to change by Micron without notice.

Table 2: Addressing

Parameter	4096 Meg x 4	2048 Meg x 8	1024 Meg x 16
Number of bank groups	4	4	2
Bank group address	BG[1:0]	BG[1:0]	BG0
Bank count per group	4	4	4
Bank address in bank group	BA[1:0]	BA[1:0]	BA[1:0]
Row addressing	256K (A[17:0])	128K (A[16:0])	128K (A[16:0])
Column addressing	1K (A[9:0])	1K (A[9:0])	1K (A[9:0])
Page size[1]	512B	1KB	2KB

Notes: 1. Page size is per bank, calculated as follows:
Page size = $2^{COLBITS}$ × ORG/8, where COLBIT = the number of column address bits and ORG = the number of DQ bits.

Figure 1: Order Part Number Example

Example Part Number: MT40A2G8SA-062E:F



Configuration	
4 Gig x 4	4G4
2 Gig x 8	2G8
1 Gig x 16	1G16

Revision
:B, :E, :F

Case Temperature	
Commercial	None
Industrial temperature	IT

Package	Mark
78-ball 10.0mm x 11.0mm FBGA	VA
96-ball 10.0mm x 13.0mm FBGA	RC
78-ball 9.0mm x 11.0mm FBGA	JC
96-ball 9.0mm x 13.0mm FBGA	KD
78-ball 7.5mm x 11.0mm FBGA	SA
96-ball 7.5mm x 13.0mm FBGA	TB

Speed Grade	Cycle Time, CAS Latency
-068	^{t}CK = 0.682ns, CL = 21
-062E	^{t}CK = 0.625ns, CL = 22

Micron Technology, Inc. reserves the right to change products or specifications without notice.
© 2018 Micron Technology, Inc. All rights reserved.

Contents

Important Notes and Warnings . . . 18
General Notes and Description . . . 19
Description . . . 19
Industrial Temperature . . . 19
Automotive Temperature . . . 19
General Notes . . . 19
Definitions of the Device-Pin Signal Level . . . 20
Definitions of the Bus Signal Level . . . 20
Functional Block Diagrams . . . 21
Ball Assignments . . . 23
Ball Descriptions . . . 25
Package Dimensions . . . 28
State Diagram . . . 34
Functional Description . . . 36
RESET and Initialization Procedure . . . 37
Power-Up and Initialization Sequence . . . 37
RESET Initialization with Stable Power Sequence . . . 40
Uncontrolled Power-Down Sequence . . . 41
Programming Mode Registers . . . 41
Mode Register 0 . . . 44
Burst Length, Type, and Order . . . 45
CAS Latency . . . 46
Test Mode . . . 47
Write Recovery (WR)/READ-to-PRECHARGE . . . 47
DLL RESET . . . 47
Mode Register 1 . . . 48
DLL Enable/DLL Disable . . . 49
Output Driver Impedance Control . . . 50
ODT $R_{TT(NOM)}$ Values . . . 50
Additive Latency . . . 50
Rx CTLE Control . . . 50
Write Leveling . . . 50
Output Disable . . . 50
Termination Data Strobe . . . 51
Mode Register 2 . . . 52
CAS WRITE Latency . . . 53
Low-Power Auto Self Refresh . . . 53
Dynamic ODT . . . 54
Write Cyclic Redundancy Check Data Bus . . . 54
Mode Register 3 . . . 55
Multipurpose Register . . . 56
WRITE Command Latency When CRC/DM is Enabled . . . 56
Fine Granularity Refresh Mode . . . 57
Temperature Sensor Status . . . 57
Per-DRAM Addressability . . . 57
Gear-Down Mode . . . 57
Mode Register 4 . . . 58
Hard Post Package Repair Mode . . . 59
Soft Post Package Repair Mode . . . 59
WRITE Preamble . . . 60
READ Preamble . . . 60

Micron Technology, Inc. reserves the right to change products or specifications without notice.
© 2018 Micron Technology, Inc. All rights reserved.

READ Preamble Training . . . 60
Temperature-Controlled Refresh . . . 60
Command Address Latency . . . 60
Internal V_{REF} Monitor . . . 60
Maximum Power Savings Mode . . . 60
MBIST-PPR . . . 61
Mode Register 5 . . . 62
Data Bus Inversion . . . 63
Data Mask . . . 63
CA Parity Persistent Error Mode . . . 64
ODT Input Buffer for Power-Down . . . 64
CA Parity Error Status . . . 64
CRC Error Status . . . 64
CA Parity Latency Mode . . . 64
Mode Register 6 . . . 65
Data Rate Programming . . . 66
V_{REFDQ} Calibration Enable . . . 66
V_{REFDQ} Calibration Range . . . 66
V_{REFDQ} Calibration Value . . . 66
Truth Tables . . . 67
NOP Command . . . 72
DESELECT Command . . . 72
DLL-Off Mode . . . 72
DLL-On/Off Switching Procedures . . . 74
DLL Switch Sequence from DLL-On to DLL-Off . . . 74
DLL-Off to DLL-On Procedure . . . 76
Input Clock Frequency Change . . . 77
Write Leveling . . . 77
DRAM Setting for Write Leveling and DRAM TERMINATION Function in that Mode . . . 79
Procedure Description . . . 79
Write Leveling Mode Exit . . . 81
Command Address Latency . . . 82
Low-Power Auto Self Refresh Mode . . . 86
Manual Self Refresh Mode . . . 86
Multipurpose Register . . . 88
MPR Reads . . . 89
MPR Readout Format . . . 91
MPR Readout Serial Format . . . 91
MPR Readout Parallel Format . . . 92
MPR Readout Staggered Format . . . 93
MPR READ Waveforms . . . 94
MPR Writes . . . 96
MPR WRITE Waveforms . . . 96
MPR REFRESH Waveforms . . . 98
Gear-Down Mode . . . 100
Maximum Power-Saving Mode . . . 103
Maximum Power-Saving Mode Entry . . . 103
Maximum Power-Saving Mode Entry in PDA . . . 104
CKE Transition During Maximum Power-Saving Mode . . . 104
Maximum Power-Saving Mode Exit . . . 104
Command/Address Parity . . . 106
Per-DRAM Addressability . . . 113
V_{REFDQ} Calibration . . . 116

Micron Technology, Inc. reserves the right to change products or specifications without notice.
© 2018 Micron Technology, Inc. All rights reserved.

V_{REFDQ} Range and Levels . . . 117
V_{REFDQ} Step Size . . . 117
V_{REFDQ} Increment and Decrement Timing . . . 118
V_{REFDQ} Target Settings . . . 122
Connectivity Test Mode . . . 124
Pin Mapping . . . 124
Minimum Terms Definition for Logic Equations . . . 125
Logic Equations for a x4 Device . . . 125
Logic Equations for a x8 Device . . . 126
Logic Equations for a x16 Device . . . 126
CT Input Timing Requirements . . . 126
Excessive Row Activation . . . 128
Post Package Repair . . . 129
Post Package Repair . . . 129
Hard Post Package Repair . . . 129
hPPR Row Repair - Entry . . . 130
hPPR Row Repair – WRA Initiated (REF Commands Allowed) . . . 130
hPPR Row Repair – WR Initiated (REF Commands NOT Allowed) . . . 132
sPPR Row Repair . . . 133
MBIST-PPR . . . 136
MBIST-PPR Procedure . . . 137
hPPR/sPPR/MBIST-PPR Support Identifier . . . 139
ACTIVATE Command . . . 139
PRECHARGE Command . . . 140
REFRESH Command . . . 140
Temperature-Controlled Refresh Mode . . . 143
Normal Temperature Mode . . . 143
Extended Temperature Mode . . . 143
Fine Granularity Refresh Mode . . . 145
Mode Register and Command Truth Table . . . 145
^{t}REFI and ^{t}RFC Parameters . . . 145
Changing Refresh Rate . . . 148
Usage with TCR Mode . . . 148
Self Refresh Entry and Exit . . . 148
SELF REFRESH Operation . . . 150
Self Refresh Abort . . . 152
Self Refresh Exit with NOP Command . . . 153
Power-Down Mode . . . 155
Power-Down Clarifications – Case 1 . . . 160
Power-Down Entry, Exit Timing with CAL . . . 161
ODT Input Buffer Disable Mode for Power-Down . . . 163
CRC Write Data Feature . . . 165
CRC Write Data . . . 165
WRITE CRC DATA Operation . . . 165
DBI_n and CRC Both Enabled . . . 166
DM_n and CRC Both Enabled . . . 166
DM_n and DBI_n Conflict During Writes with CRC Enabled . . . 166
CRC and Write Preamble Restrictions . . . 166
CRC Simultaneous Operation Restrictions . . . 166
CRC Polynomial . . . 166
CRC Combinatorial Logic Equations . . . 167
Burst Ordering for BL8 . . . 168
CRC Data Bit Mapping . . . 168

Micron Technology, Inc. reserves the right to change products or specifications without notice.
© 2018 Micron Technology, Inc. All rights reserved.

CRC Enabled With BC4 . . . 169
CRC with BC4 Data Bit Mapping . . . 169
CRC Equations for x8 Device in BC4 Mode with A2 = 0 and A2 = 1 . . . 172
CRC Error Handling . . . 173
CRC Write Data Flow Diagram . . . 175
Data Bus Inversion . . . 176
DBI During a WRITE Operation . . . 176
DBI During a READ Operation . . . 177
Data Mask . . . 178
Programmable Preamble Modes and DQS Postambles . . . 179
WRITE Preamble Mode . . . 179
READ Preamble Mode . . . 182
READ Preamble Training . . . 182
WRITE Postamble . . . 183
READ Postamble . . . 183
Bank Access Operation . . . 185
READ Operation . . . 189
Read Timing Definitions . . . 189
Read Timing – Clock-to-Data Strobe Relationship . . . 190
Read Timing – Data Strobe-to-Data Relationship . . . 192
^{t}LZ(DQS), ^{t}LZ(DQ), ^{t}HZ(DQS), and ^{t}HZ(DQ) Calculations . . . 193
^{t}RPRE Calculation . . . 194
^{t}RPST Calculation . . . 195
READ Burst Operation . . . 196
READ Operation Followed by Another READ Operation . . . 198
READ Operation Followed by WRITE Operation . . . 203
READ Operation Followed by PRECHARGE Operation . . . 207
READ Operation with Read Data Bus Inversion (DBI) . . . 211
READ Operation with Command/Address Parity (CA Parity) . . . 211
READ Followed by WRITE with CRC Enabled . . . 212
READ Operation with Command/Address Latency (CAL) Enabled . . . 214
WRITE Operation . . . 216
Write Timing Definitions . . . 216
Write Timing – Clock-to-Data Strobe Relationship . . . 216
^{t}WPRE Calculation . . . 218
^{t}WPST Calculation . . . 219
Write Timing – Data Strobe-to-Data Relationship . . . 219
WRITE Burst Operation . . . 223
WRITE Operation Followed by Another WRITE Operation . . . 225
WRITE Operation Followed by READ Operation . . . 229
WRITE Operation Followed by PRECHARGE Operation . . . 232
WRITE Operation with WRITE DBI Enabled . . . 234
WRITE Operation with CA Parity Enabled . . . 236
WRITE Operation with Write CRC Enabled . . . 237
Write Timing Violations . . . 241
Motivation . . . 241
Data Setup and Hold Violations . . . 241
Strobe-to-Strobe and Strobe-to-Clock Violations . . . 241
ZQ CALIBRATION Commands . . . 242
On-Die Termination . . . 244
ODT Mode Register and ODT State Table . . . 244
ODT Read Disable State Table . . . 245
Synchronous ODT Mode . . . 246

Micron Technology, Inc. reserves the right to change products or specifications without notice.
© 2018 Micron Technology, Inc. All rights reserved.

ODT Latency and Posted ODT . . . 246
Timing Parameters . . . 246
ODT During Reads . . . 248
Dynamic ODT . . . 249
Functional Description . . . 249
Asynchronous ODT Mode . . . 252
Electrical Specifications . . . 253
Absolute Ratings . . . 253
DRAM Component Operating Temperature Range . . . 253
Electrical Characteristics – AC and DC Operating Conditions . . . 254
Supply Operating Conditions . . . 254
Leakages . . . 255
V_{REFCA} Supply . . . 255
V_{REFDQ} Supply and Calibration Ranges . . . 256
V_{REFDQ} Ranges . . . 257
Electrical Characteristics – AC and DC Single-Ended Input Measurement Levels . . . 258
RESET_n Input Levels . . . 258
Command/Address Input Levels . . . 258
Command, Control, and Address Setup, Hold, and Derating . . . 260
Data Receiver Input Requirements . . . 262
Connectivity Test (CT) Mode Input Levels . . . 266
Electrical Characteristics – AC and DC Differential Input Measurement Levels . . . 270
Differential Inputs . . . 270
Single-Ended Requirements for CK Differential Signals . . . 271
Slew Rate Definitions for CK Differential Input Signals . . . 272
CK Differential Input Cross Point Voltage . . . 273
DQS Differential Input Signal Definition and Swing Requirements . . . 275
DQS Differential Input Cross Point Voltage . . . 277
Slew Rate Definitions for DQS Differential Input Signals . . . 278
Electrical Characteristics – Overshoot and Undershoot Specifications . . . 280
Address, Command, and Control Overshoot and Undershoot Specifications . . . 280
Clock Overshoot and Undershoot Specifications . . . 281
Data, Strobe, and Mask Overshoot and Undershoot Specifications . . . 282
Electrical Characteristics – AC and DC Output Measurement Levels . . . 282
Single-Ended Outputs . . . 282
Differential Outputs . . . 284
Reference Load for AC Timing and Output Slew Rate . . . 285
Connectivity Test Mode Output Levels . . . 285
Electrical Characteristics – AC and DC Output Driver Characteristics . . . 287
Connectivity Test Mode Output Driver Electrical Characteristics . . . 287
Output Driver Electrical Characteristics . . . 288
Output Driver Temperature and Voltage Sensitivity . . . 290
Alert Driver . . . 291
Electrical Characteristics – On-Die Termination Characteristics . . . 293
ODT Levels and I-V Characteristics . . . 293
ODT Temperature and Voltage Sensitivity . . . 294
ODT Timing Definitions . . . 295
ODT Timing Definitions and Waveforms . . . 295
DRAM Package Electrical Specifications . . . 298
Thermal Characteristics . . . 302
Current Specifications – Measurement Conditions . . . 303
I_{DD}, I_{PP}, and I_{DDQ} Measurement Conditions . . . 303
I_{DD} Definitions . . . 305

Micron Technology, Inc. reserves the right to change products or specifications without notice.
© 2018 Micron Technology, Inc. All rights reserved.

Current Specifications – Patterns and Test Conditions 309
Current Test Definitions and Patterns 309
I_{DD} Specifications 319
Current Specifications – Limits 320
Speed Bin Tables 327
Backward Compatibility 327
Refresh Parameters By Device Density 343
AC Electrical Characteristics and AC Timing Parameters 344
Electrical Characteristics and AC Timing Parameters: 2666 Through 3200 357
Converting Time-Based Specifications to Clock-Based Requirements 370
Options Tables 371

Micron Technology, Inc. reserves the right to change products or specifications without notice.
© 2018 Micron Technology, Inc. All rights reserved.

List of Figures

Figure 1: Order Part Number Example . . . 2
Figure 2: 4 Gig x 4 Functional Block Diagram . . . 21
Figure 3: 2 Gig x 8 Functional Block Diagram . . . 21
Figure 4: 1 Gig x 16 Functional Block Diagram . . . 22
Figure 5: 78-Ball x4, x8 Ball Assignments . . . 23
Figure 6: 96-Ball x16 Ball Assignments . . . 24
Figure 7: 78-Ball FBGA – x4, x8 (VA) . . . 28
Figure 8: 78-Ball FBGA – x4, x8 (JC) . . . 29
Figure 9: 78-Ball FBGA – x4, x8 (SA) . . . 30
Figure 10: 96-Ball FBGA – x16 (RC) . . . 31
Figure 11: 96-Ball FBGA – x16 (KD) . . . 32
Figure 12: 96-Ball FBGA – x16 (TB) . . . 33
Figure 13: Simplified State Diagram . . . 34
Figure 14: RESET and Initialization Sequence at Power-On Ramping . . . 39
Figure 15: RESET Procedure at Power Stable Condition . . . 40
Figure 16: ^{t}MRD Timing . . . 42
Figure 17: ^{t}MOD Timing . . . 42
Figure 18: DLL-Off Mode Read Timing Operation . . . 73
Figure 19: DLL Switch Sequence from DLL-On to DLL-Off . . . 75
Figure 20: DLL Switch Sequence from DLL-Off to DLL-On . . . 76
Figure 21: Write Leveling Concept, Example 1 . . . 78
Figure 22: Write Leveling Concept, Example 2 . . . 79
Figure 23: Write Leveling Sequence (DQS Capturing CK LOW at T1 and CK HIGH at T2) . . . 80
Figure 24: Write Leveling Exit . . . 81
Figure 25: CAL Timing Definition . . . 82
Figure 26: CAL Timing Example (Consecutive CS_n = LOW) . . . 82
Figure 27: CAL Enable Timing – ^{t}MOD_CAL . . . 83
Figure 28: ^{t}MOD_CAL, MRS to Valid Command Timing with CAL Enabled . . . 83
Figure 29: CAL Enabling MRS to Next MRS Command, ^{t}MRD_CAL . . . 83
Figure 30: ^{t}MRD_CAL, Mode Register Cycle Time With CAL Enabled . . . 84
Figure 31: Consecutive READ BL8, CAL3, 1^{t}CK Preamble, Different Bank Group . . . 85
Figure 32: Consecutive READ BL8, CAL4, 1^{t}CK Preamble, Different Bank Group . . . 85
Figure 33: Auto Self Refresh Ranges . . . 87
Figure 34: MPR Block Diagram . . . 88
Figure 35: MPR READ Timing . . . 94
Figure 36: MPR Back-to-Back READ Timing . . . 95
Figure 37: MPR READ-to-WRITE Timing . . . 95
Figure 38: MPR WRITE and WRITE-to-READ Timing . . . 97
Figure 39: MPR Back-to-Back WRITE Timing . . . 97
Figure 40: REFRESH Timing . . . 98
Figure 41: READ-to-REFRESH Timing . . . 98
Figure 42: WRITE-to-REFRESH Timing . . . 99
Figure 43: Clock Mode Change from 1/2 Rate to 1/4 Rate (Initialization) . . . 101
Figure 44: Clock Mode Change After Exiting Self Refresh . . . 101
Figure 45: Comparison Between Gear-Down Disable and Gear-Down Enable . . . 102
Figure 46: Maximum Power-Saving Mode Entry . . . 103
Figure 47: Maximum Power-Saving Mode Entry with PDA . . . 104
Figure 48: Maintaining Maximum Power-Saving Mode with CKE Transition . . . 104
Figure 49: Maximum Power-Saving Mode Exit . . . 105
Figure 50: Command/Address Parity Operation . . . 106
Figure 51: Command/Address Parity During Normal Operation . . . 108

Micron Technology, Inc. reserves the right to change products or specifications without notice.
© 2018 Micron Technology, Inc. All rights reserved.

Figure 52: Persistent CA Parity Error Checking Operation . . . 108
Figure 53: CA Parity Error Checking – SRE Attempt . . . 109
Figure 54: CA Parity Error Checking – SRX Attempt . . . 109
Figure 55: CA Parity Error Checking – PDE/PDX . . . 110
Figure 56: Parity Entry Timing Example – ^{t}MRD_PAR . . . 110
Figure 57: Parity Entry Timing Example – ^{t}MOD_PAR . . . 110
Figure 58: Parity Exit Timing Example – ^{t}MRD_PAR . . . 111
Figure 59: Parity Exit Timing Example – ^{t}MOD_PAR . . . 111
Figure 60: CA Parity Flow Diagram . . . 112
Figure 61: PDA Operation Enabled, BL8 . . . 114
Figure 62: PDA Operation Enabled, BC4 . . . 114
Figure 63: MRS PDA Exit . . . 115
Figure 64: V_{REFDQ} Voltage Range . . . 116
Figure 65: Example of V_{REF} Set Tolerance and Step Size . . . 118
Figure 66: V_{REFDQ} Timing Diagram for $V_{REF,time}$ Parameter . . . 119
Figure 67: V_{REFDQ} Training Mode Entry and Exit Timing Diagram . . . 120
Figure 68: V_{REF} Step: Single Step Size Increment Case . . . 121
Figure 69: V_{REF} Step: Single Step Size Decrement Case . . . 121
Figure 70: V_{REF} Full Step: From $V_{REF,min}$ to $V_{REF,max}$ Case . . . 122
Figure 71: V_{REF} Full Step: From $V_{REF,max}$ to $V_{REF,min}$ Case . . . 122
Figure 72: V_{REFDQ} Equivalent Circuit . . . 123
Figure 73: Connectivity Test Mode Entry . . . 127
Figure 74: hPPR WRA – Entry . . . 131
Figure 75: hPPR WRA – Repair and Exit . . . 132
Figure 76: hPPR WR – Entry . . . 133
Figure 77: hPPR WR – Repair and Exit . . . 133
Figure 78: sPPR – Entry . . . 135
Figure 79: sPPR – Repair, and Exit . . . 136
Figure 80: MBIST-PPR Sequence . . . 138
Figure 81: ^{t}RRD Timing . . . 139
Figure 82: ^{t}FAW Timing . . . 140
Figure 83: REFRESH Command Timing . . . 141
Figure 84: Postponing REFRESH Commands (Example) . . . 141
Figure 85: Pulling In REFRESH Commands (Example) . . . 142
Figure 86: TCR Mode Example[1] . . . 144
Figure 87: 4Gb with Fine Granularity Refresh Mode Example . . . 147
Figure 88: OTF REFRESH Command Timing . . . 148
Figure 89: Self Refresh Entry/Exit Timing . . . 151
Figure 90: Self Refresh Entry/Exit Timing with CAL Mode . . . 152
Figure 91: Self Refresh Abort . . . 153
Figure 92: Self Refresh Exit with NOP Command . . . 154
Figure 93: Active Power-Down Entry and Exit . . . 156
Figure 94: Power-Down Entry After Read and Read with Auto Precharge . . . 157
Figure 95: Power-Down Entry After Write and Write with Auto Precharge . . . 157
Figure 96: Power-Down Entry After Write . . . 158
Figure 97: Precharge Power-Down Entry and Exit . . . 158
Figure 98: REFRESH Command to Power-Down Entry . . . 159
Figure 99: Active Command to Power-Down Entry . . . 159
Figure 100: PRECHARGE/PRECHARGE ALL Command to Power-Down Entry . . . 160
Figure 101: MRS Command to Power-Down Entry . . . 160
Figure 102: Power-Down Entry/Exit Clarifications – Case 1 . . . 161
Figure 103: Active Power-Down Entry and Exit Timing with CAL . . . 161
Figure 104: REFRESH Command to Power-Down Entry with CAL . . . 162

Micron Technology, Inc. reserves the right to change products or specifications without notice.
© 2018 Micron Technology, Inc. All rights reserved.

Figure 105: ODT Power-Down Entry with ODT Buffer Disable Mode . . . 163
Figure 106: ODT Power-Down Exit with ODT Buffer Disable Mode . . . 164
Figure 107: CRC Write Data Operation . . . 165
Figure 108: CRC Error Reporting . . . 174
Figure 109: CA Parity Flow Diagram . . . 175
Figure 110: 1tCK vs. 2tCK WRITE Preamble Mode . . . 179
Figure 111: 1tCK vs. 2tCK WRITE Preamble Mode, tCCD = 4 . . . 180
Figure 112: 1tCK vs. 2tCK WRITE Preamble Mode, tCCD = 5 . . . 181
Figure 113: 1tCK vs. 2tCK WRITE Preamble Mode, tCCD = 6 . . . 181
Figure 114: 1tCK vs. 2tCK READ Preamble Mode . . . 182
Figure 115: READ Preamble Training . . . 183
Figure 116: WRITE Postamble . . . 183
Figure 117: READ Postamble . . . 184
Figure 118: Bank Group x4/x8 Block Diagram . . . 185
Figure 119: READ Burst tCCD_S and tCCD_L Examples . . . 186
Figure 120: Write Burst tCCD_S and tCCD_L Examples . . . 186
Figure 121: tRRD Timing . . . 187
Figure 122: tWTR_S Timing (WRITE-to-READ, Different Bank Group, CRC and DM Disabled) . . . 188
Figure 123: tWTR_L Timing (WRITE-to-READ, Same Bank Group, CRC and DM Disabled) . . . 188
Figure 124: Read Timing Definition . . . 190
Figure 125: Clock-to-Data Strobe Relationship . . . 191
Figure 126: Data Strobe-to-Data Relationship . . . 192
Figure 127: tLZ and tHZ Method for Calculating Transitions and Endpoints . . . 193
Figure 128: tRPRE Method for Calculating Transitions and Endpoints . . . 194
Figure 129: tRPST Method for Calculating Transitions and Endpoints . . . 195
Figure 130: READ Burst Operation, RL = 11 (AL = 0, CL = 11, BL8) . . . 196
Figure 131: READ Burst Operation, RL = 21 (AL = 10, CL = 11, BL8) . . . 197
Figure 132: Consecutive READ (BL8) with 1tCK Preamble in Different Bank Group . . . 198
Figure 133: Consecutive READ (BL8) with 2tCK Preamble in Different Bank Group . . . 198
Figure 134: Nonconsecutive READ (BL8) with 1tCK Preamble in Same or Different Bank Group . . . 199
Figure 135: Nonconsecutive READ (BL8) with 2tCK Preamble in Same or Different Bank Group . . . 199
Figure 136: READ (BC4) to READ (BC4) with 1tCK Preamble in Different Bank Group . . . 200
Figure 137: READ (BC4) to READ (BC4) with 2tCK Preamble in Different Bank Group . . . 200
Figure 138: READ (BL8) to READ (BC4) OTF with 1tCK Preamble in Different Bank Group . . . 201
Figure 139: READ (BL8) to READ (BC4) OTF with 2tCK Preamble in Different Bank Group . . . 201
Figure 140: READ (BC4) to READ (BL8) OTF with 1tCK Preamble in Different Bank Group . . . 202
Figure 141: READ (BC4) to READ (BL8) OTF with 2tCK Preamble in Different Bank Group . . . 202
Figure 142: READ (BL8) to WRITE (BL8) with 1tCK Preamble in Same or Different Bank Group . . . 203
Figure 143: READ (BL8) to WRITE (BL8) with 2tCK Preamble in Same or Different Bank Group . . . 203
Figure 144: READ (BC4) OTF to WRITE (BC4) OTF with 1tCK Preamble in Same or Different Bank Group . . . 204
Figure 145: READ (BC4) OTF to WRITE (BC4) OTF with 2tCK Preamble in Same or Different Bank Group . . . 204
Figure 146: READ (BC4) Fixed to WRITE (BC4) Fixed with 1tCK Preamble in Same or Different Bank Group . . . 205
Figure 147: READ (BC4) Fixed to WRITE (BC4) Fixed with 2tCK Preamble in Same or Different Bank Group . . . 205
Figure 148: READ (BC4) to WRITE (BL8) OTF with 1tCK Preamble in Same or Different Bank Group . . . 206
Figure 149: READ (BC4) to WRITE (BL8) OTF with 2tCK Preamble in Same or Different Bank Group . . . 206
Figure 150: READ (BL8) to WRITE (BC4) OTF with 1tCK Preamble in Same or Different Bank Group . . . 207
Figure 151: READ (BL8) to WRITE (BC4) OTF with 2tCK Preamble in Same or Different Bank Group . . . 207
Figure 152: READ to PRECHARGE with 1tCK Preamble . . . 208
Figure 153: READ to PRECHARGE with 2tCK Preamble . . . 209
Figure 154: READ to PRECHARGE with Additive Latency and 1tCK Preamble . . . 209
Figure 155: READ with Auto Precharge and 1tCK Preamble . . . 210
Figure 156: READ with Auto Precharge, Additive Latency, and 1tCK Preamble . . . 210
Figure 157: Consecutive READ (BL8) with 1tCK Preamble and DBI in Different Bank Group . . . 211

Micron Technology, Inc. reserves the right to change products or specifications without notice.
© 2018 Micron Technology, Inc. All rights reserved.

Figure 158: Consecutive READ (BL8) with 1tCK Preamble and CA Parity in Different Bank Group . . . 211
Figure 159: READ (BL8) to WRITE (BL8) with 1tCK Preamble and CA Parity in Same or Different Bank Group . . . 212
Figure 160: READ (BL8) to WRITE (BL8 or BC4: OTF) with 1tCK Preamble and Write CRC in Same or Different Bank Group . . . 212
Figure 161: READ (BC4: Fixed) to WRITE (BC4: Fixed) with 1tCK Preamble and Write CRC in Same or Different Bank Group . . . 214
Figure 162: Consecutive READ (BL8) with CAL (3tCK) and 1tCK Preamble in Different Bank Group . . . 214
Figure 163: Consecutive READ (BL8) with CAL (4tCK) and 1tCK Preamble in Different Bank Group . . . 215
Figure 164: Write Timing Definition . . . 217
Figure 165: tWPRE Method for Calculating Transitions and Endpoints . . . 218
Figure 166: tWPST Method for Calculating Transitions and Endpoints . . . 219
Figure 167: Rx Compliance Mask . . . 220
Figure 168: V_{CENT_DQ} V_{REFDQ} Voltage Variation . . . 220
Figure 169: Rx Mask DQ-to-DQS Timings . . . 221
Figure 170: Rx Mask DQ-to-DQS DRAM-Based Timings . . . 222
Figure 171: Example of Data Input Requirements Without Training . . . 223
Figure 172: WRITE Burst Operation, WL = 9 (AL = 0, CWL = 9, BL8) . . . 224
Figure 173: WRITE Burst Operation, WL = 19 (AL = 10, CWL = 9, BL8) . . . 224
Figure 174: Consecutive WRITE (BL8) with 1tCK Preamble in Different Bank Group . . . 225
Figure 175: Consecutive WRITE (BL8) with 2tCK Preamble in Different Bank Group . . . 225
Figure 176: Nonconsecutive WRITE (BL8) with 1tCK Preamble in Same or Different Bank Group . . . 226
Figure 177: Nonconsecutive WRITE (BL8) with 2tCK Preamble in Same or Different Bank Group . . . 226
Figure 178: WRITE (BC4) OTF to WRITE (BC4) OTF with 1tCK Preamble in Different Bank Group . . . 227
Figure 179: WRITE (BC4) OTF to WRITE (BC4) OTF with 2tCK Preamble in Different Bank Group . . . 227
Figure 180: WRITE (BC4) Fixed to WRITE (BC4) Fixed with 1tCK Preamble in Different Bank Group . . . 228
Figure 181: WRITE (BL8) to WRITE (BC4) OTF with 1tCK Preamble in Different Bank Group . . . 228
Figure 182: WRITE (BC4) OTF to WRITE (BL8) with 1tCK Preamble in Different Bank Group . . . 229
Figure 183: WRITE (BL8) to READ (BL8) with 1tCK Preamble in Different Bank Group . . . 229
Figure 184: WRITE (BL8) to READ (BL8) with 1tCK Preamble in Same Bank Group . . . 230
Figure 185: WRITE (BC4) OTF to READ (BC4) OTF with 1tCK Preamble in Different Bank Group . . . 230
Figure 186: WRITE (BC4) OTF to READ (BC4) OTF with 1tCK Preamble in Same Bank Group . . . 231
Figure 187: WRITE (BC4) Fixed to READ (BC4) Fixed with 1 tCK Preamble in Different Bank Group . . . 231
Figure 188: WRITE (BC4) Fixed to READ (BC4) Fixed with 1tCK Preamble in Same Bank Group . . . 232
Figure 189: WRITE (BL8/BC4-OTF) to PRECHARGE with 1tCK Preamble . . . 232
Figure 190: WRITE (BC4-Fixed) to PRECHARGE with 1tCK Preamble . . . 233
Figure 191: WRITE (BL8/BC4-OTF) to Auto PRECHARGE with 1tCK Preamble . . . 233
Figure 192: WRITE (BC4-Fixed) to Auto PRECHARGE with 1tCK Preamble . . . 234
Figure 193: WRITE (BL8/BC4-OTF) with 1tCK Preamble and DBI . . . 234
Figure 194: WRITE (BC4-Fixed) with 1tCK Preamble and DBI . . . 235
Figure 195: Consecutive Write (BL8) with 1tCK Preamble and CA Parity in Different Bank Group . . . 236
Figure 196: Consecutive WRITE (BL8/BC4-OTF) with 1tCK Preamble and Write CRC in Same or Different Bank Group . . . 237
Figure 197: Consecutive WRITE (BC4-Fixed) with 1tCK Preamble and Write CRC in Same or Different Bank Group . 237
Figure 198: Nonconsecutive WRITE (BL8/BC4-OTF) with 1tCK Preamble and Write CRC in Same or Different Bank Group . . . 238
Figure 199: Nonconsecutive WRITE (BL8/BC4-OTF) with 2tCK Preamble and Write CRC in Same or Different Bank Group . . . 239
Figure 200: WRITE (BL8/BC4-OTF/Fixed) with 1tCK Preamble and Write CRC in Same or Different Bank Group 240
Figure 201: ZQ Calibration Timing . . . 243
Figure 202: Functional Representation of ODT . . . 244
Figure 203: Synchronous ODT Timing with BL8 . . . 247
Figure 204: Synchronous ODT with BC4 . . . 247

Micron Technology, Inc. reserves the right to change products or specifications without notice.
© 2018 Micron Technology, Inc. All rights reserved.

Figure 205: ODT During Reads . . . 248
Figure 206: Dynamic ODT (1^t CK Preamble; CL = 14, CWL = 11, BL = 8, AL = 0, CRC Disabled) . . . 250
Figure 207: Dynamic ODT Overlapped with $R_{TT(NOM)}$ (CL = 14, CWL = 11, BL = 8, AL = 0, CRC Disabled) . . . 250
Figure 208: Asynchronous ODT Timings with DLL Off . . . 252
Figure 209: V_{REFDQ} Voltage Range . . . 255
Figure 210: RESET_n Input Slew Rate Definition . . . 258
Figure 211: Single-Ended Input Slew Rate Definition . . . 260
Figure 212: DQ Slew Rate Definitions . . . 263
Figure 213: Rx Mask Relative to $^tDS/^tDH$ . . . 265
Figure 214: Rx Mask Without Write Training . . . 266
Figure 215: TEN Input Slew Rate Definition . . . 267
Figure 216: CT Type-A Input Slew Rate Definition . . . 268
Figure 217: CT Type-B Input Slew Rate Definition . . . 268
Figure 218: CT Type-C Input Slew Rate Definition . . . 269
Figure 219: CT Type-D Input Slew Rate Definition . . . 270
Figure 220: Differential AC Swing and "Time Exceeding AC-Level" ^tDVAC . . . 270
Figure 221: Single-Ended Requirements for CK . . . 272
Figure 222: Differential Input Slew Rate Definition for CK_t, CK_c . . . 273
Figure 223: $V_{IX(CK)}$ Definition . . . 274
Figure 224: Differential Input Signal Definition for DQS_t, DQS_c . . . 275
Figure 225: DQS_t, DQS_c Input Peak Voltage Calculation and Range of Exempt non-Monotonic Signaling . . . 276
Figure 226: V_{IXDQS} Definition . . . 277
Figure 227: Differential Input Slew Rate and Input Level Definition for DQS_t, DQS_c . . . 278
Figure 228: ADDR, CMD, CNTL Overshoot and Undershoot Definition . . . 280
Figure 229: CK Overshoot and Undershoot Definition . . . 281
Figure 230: Data, Strobe, and Mask Overshoot and Undershoot Definition . . . 282
Figure 231: Single-ended Output Slew Rate Definition . . . 283
Figure 232: Differential Output Slew Rate Definition . . . 284
Figure 233: Reference Load For AC Timing and Output Slew Rate . . . 285
Figure 234: Connectivity Test Mode Reference Test Load . . . 286
Figure 235: Connectivity Test Mode Output Slew Rate Definition . . . 286
Figure 236: Output Driver During Connectivity Test Mode . . . 287
Figure 237: Output Driver: Definition of Voltages and Currents . . . 288
Figure 238: Alert Driver . . . 291
Figure 239: ODT Definition of Voltages and Currents . . . 293
Figure 240: ODT Timing Reference Load . . . 295
Figure 241: ^tADC Definition with Direct ODT Control . . . 296
Figure 242: ^tADC Definition with Dynamic ODT Control . . . 297
Figure 243: ^tAOFAS and ^tAONAS Definitions . . . 297
Figure 244: Thermal Measurement Point . . . 303
Figure 245: Measurement Setup and Test Load for I_{DDx}, I_{PPx}, and I_{DDQx} . . . 304
Figure 246: Correlation: Simulated Channel I/O Power to Actual Channel I/O Power . . . 305

Micron Technology, Inc. reserves the right to change products or specifications without notice.
© 2018 Micron Technology, Inc. All rights reserved.

List of Tables

Table 1: Key Timing Parameters . . . 1
Table 2: Addressing . . . 2
Table 3: Ball Descriptions . . . 25
Table 4: State Diagram Command Definitions . . . 35
Table 5: Supply Power-up Slew Rate . . . 37
Table 6: Address Pin Mapping . . . 44
Table 7: MR0 Register Definition . . . 44
Table 8: Burst Type and Burst Order . . . 46
Table 9: Address Pin Mapping . . . 48
Table 10: MR1 Register Definition . . . 48
Table 11: Additive Latency (AL) Settings . . . 50
Table 12: TDQS Function Matrix . . . 51
Table 13: Address Pin Mapping . . . 52
Table 14: MR2 Register Definition . . . 52
Table 15: Address Pin Mapping . . . 55
Table 16: MR3 Register Definition . . . 55
Table 17: Address Pin Mapping . . . 58
Table 18: MR4 Register Definition . . . 58
Table 19: Address Pin Mapping . . . 62
Table 20: MR5 Register Definition . . . 62
Table 21: Address Pin Mapping . . . 65
Table 22: MR6 Register Definition . . . 65
Table 23: Truth Table – Command . . . 67
Table 24: Truth Table – CKE . . . 70
Table 25: MR Settings for Leveling Procedures . . . 79
Table 26: DRAM TERMINATION Function in Leveling Mode . . . 79
Table 27: Auto Self Refresh Mode . . . 86
Table 28: MR3 Setting for the MPR Access Mode . . . 88
Table 29: DRAM Address to MPR UI Translation . . . 88
Table 30: MPR Page and MPR*x* Definitions . . . 89
Table 31: MPR Readout Serial Format . . . 91
Table 32: MPR Readout – Parallel Format . . . 92
Table 33: MPR Readout Staggered Format, x4 . . . 93
Table 34: MPR Readout Staggered Format, x4 – Consecutive READs . . . 93
Table 35: MPR Readout Staggered Format, x8 and x16 . . . 94
Table 36: Mode Register Setting for CA Parity . . . 107
Table 37: V_{REFDQ} Range and Levels . . . 117
Table 38: V_{REFDQ} Settings (V_{DDQ} = 1.2V) . . . 122
Table 39: Connectivity Mode Pin Description and Switching Levels . . . 125
Table 40: MAC Encoding of MPR Page 3 MPR3 . . . 128
Table 41: PPR MR0 Guard Key Settings . . . 130
Table 42: DDR4 hPPR Timing Parameters DDR4-1600 through DDR4-3200 . . . 133
Table 43: sPPR Associated Rows . . . 134
Table 44: PPR MR0 Guard Key Settings . . . 134
Table 45: DDR4 sPPR Timing Parameters DDR4-1600 Through DDR4-3200 . . . 136
Table 46: MBIST-PPR Timing Parameter . . . 137
Table 47: MPR Page3 Configuration for MBIST-PPR . . . 138
Table 48: DDR4 Repair Mode Support Identifier . . . 139
Table 49: Normal ^{t}REFI Refresh (TCR Enabled) . . . 143
Table 50: MRS Definition . . . 145
Table 51: REFRESH Command Truth Table . . . 145

Micron Technology, Inc. reserves the right to change products or specifications without notice.
© 2018 Micron Technology, Inc. All rights reserved.

Table 52: tREFI and tRFC Parameters . . . 146
Table 53: Power-Down Entry Definitions . . . 155
Table 54: CRC Error Detection Coverage . . . 166
Table 55: CRC Data Mapping for x4 Devices, BL8 . . . 168
Table 56: CRC Data Mapping for x8 Devices, BL8 . . . 168
Table 57: CRC Data Mapping for x16 Devices, BL8 . . . 169
Table 58: CRC Data Mapping for x4 Devices, BC4 . . . 170
Table 59: CRC Data Mapping for x8 Devices, BC4 . . . 170
Table 60: CRC Data Mapping for x16 Devices, BC4 . . . 171
Table 61: DBI vs. DM vs. TDQS Function Matrix . . . 176
Table 62: DBI Write, DQ Frame Format (x8) . . . 176
Table 63: DBI Write, DQ Frame Format (x16) . . . 176
Table 64: DBI Read, DQ Frame Format (x8) . . . 177
Table 65: DBI Read, DQ Frame Format (x16) . . . 177
Table 66: DM vs. TDQS vs. DBI Function Matrix . . . 178
Table 67: Data Mask, DQ Frame Format (x8) . . . 178
Table 68: Data Mask, DQ Frame Format (x16) . . . 178
Table 69: CWL Selection . . . 180
Table 70: DDR4 Bank Group Timing Examples . . . 185
Table 71: Read-to-Write and Write-to-Read Command Intervals . . . 190
Table 72: Termination State Table . . . 245
Table 73: Read Termination Disable Window . . . 245
Table 74: ODT Latency at DDR4-1600/-1866/-2133/-2400/-2666/-3200 . . . 246
Table 75: Dynamic ODT Latencies and Timing (1tCK Preamble Mode and CRC Disabled) . . . 249
Table 76: Dynamic ODT Latencies and Timing with Preamble Mode and CRC Mode Matrix . . . 250
Table 77: Absolute Maximum Ratings . . . 253
Table 78: Temperature Range . . . 253
Table 79: Recommended Supply Operating Conditions . . . 254
Table 80: V_{DD} Slew Rate . . . 254
Table 81: Leakages . . . 255
Table 82: V_{REFDQ} Specification . . . 256
Table 83: V_{REFDQ} Range and Levels . . . 257
Table 84: RESET_n Input Levels (CMOS) . . . 258
Table 85: Command and Address Input Levels: DDR4-1600 Through DDR4-2400 . . . 258
Table 86: Command and Address Input Levels: DDR4-2666 . . . 259
Table 87: Command and Address Input Levels: DDR4-2933 and DDR4-3200 . . . 259
Table 88: Single-Ended Input Slew Rates . . . 259
Table 89: Command and Address Setup and Hold Values Referenced – AC/DC-Based . . . 261
Table 90: Derating Values for tIS/tIH – AC100DC75-Based . . . 261
Table 91: Derating Values for tIS/tIH – AC90/DC65-Based . . . 262
Table 92: DQ Input Receiver Specifications . . . 263
Table 93: Rx Mask and tDS/tDH without Write Training . . . 266
Table 94: TEN Input Levels (CMOS) . . . 266
Table 95: CT Type-A Input Levels . . . 267
Table 96: CT Type-B Input Levels . . . 268
Table 97: CT Type-C Input Levels (CMOS) . . . 268
Table 98: CT Type-D Input Levels . . . 269
Table 99: Differential Input Swing Requirements for CK_t, CK_c . . . 271
Table 100: Minimum Time AC Time tDVAC for CK . . . 271
Table 101: Single-Ended Requirements for CK . . . 272
Table 102: CK Differential Input Slew Rate Definition . . . 272
Table 103: Cross Point Voltage For CK Differential Input Signals at DDR4-1600 through DDR4-2400 . . . 274
Table 104: Cross Point Voltage For CK Differential Input Signals at DDR4-2666 through DDR4-3200 . . . 274

Micron Technology, Inc. reserves the right to change products or specifications without notice.
© 2018 Micron Technology, Inc. All rights reserved.

Table 105: DDR4-1600 through DDR4-2400 Differential Input Swing Requirements for DQS_t, DQS_c 275
Table 106: DDR4-2633 through DDR4-3200 Differential Input Swing Requirements for DQS_t, DQS_c 275
Table 107: Cross Point Voltage For Differential Input Signals DQS 277
Table 108: DQS Differential Input Slew Rate Definition 278
Table 109: DDR4-1600 through DDR4-2400 Differential Input Slew Rate and Input Levels for DQS_t, DQS_c . . . 278
Table 110: DDR4-2666 through DDR4-3200 Differential Input Slew Rate and Input Levels for DQS_t, DQS_c . . . 279
Table 111: ADDR, CMD, CNTL Overshoot and Undershoot/Specifications 280
Table 112: CK Overshoot and Undershoot/ Specifications 281
Table 113: Data, Strobe, and Mask Overshoot and Undershoot/ Specifications 282
Table 114: Single-Ended Output Levels 282
Table 115: Single-Ended Output Slew Rate Definition 283
Table 116: Single-Ended Output Slew Rate 283
Table 117: Differential Output Levels 284
Table 118: Differential Output Slew Rate Definition 284
Table 119: Differential Output Slew Rate 285
Table 120: Connectivity Test Mode Output Levels 285
Table 121: Connectivity Test Mode Output Slew Rate 286
Table 122: Output Driver Electrical Characteristics During Connectivity Test Mode 288
Table 123: Strong Mode (34?) Output Driver Electrical Characteristics 289
Table 124: Weak Mode (48?) Output Driver Electrical Characteristics 290
Table 125: Output Driver Sensitivity Definitions 291
Table 126: Output Driver Voltage and Temperature Sensitivity 291
Table 127: Alert Driver Voltage 292
Table 128: ODT DC Characteristics 293
Table 129: ODT Sensitivity Definitions 294
Table 130: ODT Voltage and Temperature Sensitivity 295
Table 131: ODT Timing Definitions 295
Table 132: Reference Settings for ODT Timing Measurements 296
Table 133: DRAM Package Electrical Specifications for x4 and x8 Devices 298
Table 134: DRAM Package Electrical Specifications for x16 Devices 299
Table 135: Pad Input/Output Capacitance 301
Table 136: Thermal Characteristics 302
Table 137: Basic I_{DD}, I_{PP}, and I_{DDQ} Measurement Conditions 305
Table 138: I_{DD0} and I_{PP0} Measurement-Loop Pattern[1] 309
Table 139: I_{DD1} Measurement – Loop Pattern[1] 310
Table 140: I_{DD2N}, I_{DD3N}, and I_{PP3P} Measurement – Loop Pattern[1] 311
Table 141: I_{DD2NT} Measurement – Loop Pattern[1] 313
Table 142: I_{DD4R} Measurement – Loop Pattern[1] 314
Table 143: I_{DD4W} Measurement – Loop Pattern[1] 315
Table 144: I_{DD4Wc} Measurement – Loop Pattern[1] 316
Table 145: I_{DD5R} Measurement – Loop Pattern[1] 317
Table 146: I_{DD7} Measurement – Loop Pattern[1] 318
Table 147: Timings used for I_{DD}, I_{PP}, and I_{DDQ} Measurement – Loop Patterns 319
Table 148: I_{DD} and I_{PP} Current Limits; Die Rev. B (-40° ? T_C ? 85°C) 320
Table 149: I_{DD} and I_{PP} Current Limits; Die Rev. E (-40° ? T_C ? 85°C) 322
Table 150: I_{DD} and I_{PP} Current Limits; Die Rev. F (-40° ? T_C ? 85°C) 324
Table 151: Backward Compatibility 328
Table 152: DDR4-1600 Speed Bins and Operating Conditions 329
Table 153: DDR4-1866 Speed Bins and Operating Conditions 331
Table 154: DDR4-2133 Speed Bins and Operating Conditions 333
Table 155: DDR4-2400 Speed Bins and Operating Conditions 335
Table 156: DDR4-2666 Speed Bins and Operating Conditions 337
Table 157: DDR4-2933 Speed Bins and Operating Conditions 339

Micron Technology, Inc. reserves the right to change products or specifications without notice.
© 2018 Micron Technology, Inc. All rights reserved.

Table 158: DDR4-3200 Speed Bins and Operating Conditions 341
Table 159: Refresh Parameters by Device Density 343
Table 160: Electrical Characteristics and AC Timing Parameters: DDR4-1600 through DDR4-2400 344
Table 161: Electrical Characteristics and AC Timing Parameters 357
Table 162: Options – Speed Based 371
Table 163: Options – Width Based 372

Micron Technology, Inc. reserves the right to change products or specifications without notice.
© 2018 Micron Technology, Inc. All rights reserved.

Important Notes and Warnings

Micron Technology, Inc. ("Micron") reserves the right to make changes to information published in this document, including without limitation specifications and product descriptions. This document supersedes and replaces all information supplied prior to the publication hereof. You may not rely on any information set forth in this document if you obtain the product described herein from any unauthorized distributor or other source not authorized by Micron.

Automotive Applications. Products are not designed or intended for use in automotive applications unless specifically designated by Micron as automotive-grade by their respective data sheets. Distributor and customer/distributor shall assume the sole risk and liability for and shall indemnify and hold Micron harmless against all claims, costs, damages, and expenses and reasonable attorneys' fees arising out of, directly or indirectly, any claim of product liability, personal injury, death, or property damage resulting directly or indirectly from any use of non-automotive-grade products in automotive applications. Customer/distributor shall ensure that the terms and conditions of sale between customer/distributor and any customer of distributor/customer (1) state that Micron products are not designed or intended for use in automotive applications unless specifically designated by Micron as automotive-grade by their respective data sheets and (2) require such customer of distributor/customer to indemnify and hold Micron harmless against all claims, costs, damages, and expenses and reasonable attorneys' fees arising out of, directly or indirectly, any claim of product liability, personal injury, death, or property damage resulting from any use of non-automotive-grade products in automotive applications.

Critical Applications. Products are not authorized for use in applications in which failure of the Micron component could result, directly or indirectly in death, personal injury, or severe property or environmental damage ("Critical Applications"). Customer must protect against death, personal injury, and severe property and environmental damage by incorporating safety design measures into customer's applications to ensure that failure of the Micron component will not result in such harms. Should customer or distributor purchase, use, or sell any Micron component for any critical application, customer and distributor shall indemnify and hold harmless Micron and its subsidiaries, subcontractors, and affiliates and the directors, officers, and employees of each against all claims, costs, damages, and expenses and reasonable attorneys' fees arising out of, directly or indirectly, any claim of product liability, personal injury, or death arising in any way out of such critical application, whether or not Micron or its subsidiaries, subcontractors, or affiliates were negligent in the design, manufacture, or warning of the Micron product.

Customer Responsibility. Customers are responsible for the design, manufacture, and operation of their systems, applications, and products using Micron products. ALL SEMICONDUCTOR PRODUCTS HAVE INHERENT FAILURE RATES AND LIMITED USEFUL LIVES. IT IS THE CUSTOMER'S SOLE RESPONSIBILITY TO DETERMINE WHETHER THE MICRON PRODUCT IS SUITABLE AND FIT FOR THE CUSTOMER'S SYSTEM, APPLICATION, OR PRODUCT. Customers must ensure that adequate design, manufacturing, and operating safeguards are included in customer's applications and products to eliminate the risk that personal injury, death, or severe property or environmental damages will result from failure of any semiconductor component.

Limited Warranty. In no event shall Micron be liable for any indirect, incidental, punitive, special or consequential damages (including without limitation lost profits, lost savings, business interruption, costs related to the removal or replacement of any products or rework charges) whether or not such damages are based on tort, warranty, breach of contract or other legal theory, unless explicitly stated in a written agreement executed by Micron's duly authorized representative.

Micron Technology, Inc. reserves the right to change products or specifications without notice.
© 2018 Micron Technology, Inc. All rights reserved.

General Notes and Description

Description

The DDR4 SDRAM is a high-speed dynamic random-access memory internally configured as an eight-bank DRAM for the x16 configuration and as a 16-bank DRAM for the x4 and x8 configurations. The DDR4 SDRAM uses an 8*n*-prefetch architecture to achieve high-speed operation. The 8*n*-prefetch architecture is combined with an interface designed to transfer two data words per clock cycle at the I/O pins.

A single READ or WRITE operation for the DDR4 SDRAM consists of a single 8*n*-bit wide, four-clock data transfer at the internal DRAM core and two corresponding *n*-bit wide, one-half-clock-cycle data transfers at the I/O pins.

Industrial Temperature

An industrial temperature (IT) device option requires that the case temperature not exceed below –40°C or above 95°C. JEDEC specifications require the refresh rate to double when T_C exceeds 85°C; this also requires use of the high-temperature self refresh option. Additionally, ODT resistance and the input/output impedance must be derated when operating outside of the commercial temperature range, when T_C is between –40°C and 0°C.

Automotive Temperature

The automotive temperature (AT) device option requires that the case temperature not exceed below –40°C or above 105°C. The specifications require the refresh rate to 2X when T_C exceeds 85°C; 4X when T_C exceeds 95°C. Additionally, ODT resistance and the input/output impedance must be derated when operating temperature Tc <0°C.

General Notes

- The functionality and the timing specifications discussed in this data sheet are for the DLL enable mode of operation (normal operation), unless specifically stated otherwise.
- Throughout the data sheet, the various figures and text refer to DQs as "DQ." The DQ term is to be interpreted as any and all DQ collectively, unless specifically stated otherwise.
- The terms "_t" and "_c" are used to represent the true and complement of a differential signal pair. These terms replace the previously used notation of "#" and/or overbar characters. For example, differential data strobe pair DQS, DQS# is now referred to as DQS_t, DQS_c.
- The term "_n" is used to represent a signal that is active LOW and replaces the previously used "#" and/or overbar characters. For example: CS# is now referred to as CS_n.
- The terms "DQS" and "CK" found throughout the data sheet are to be interpreted as DQS_t, DQS_c and CK_t, CK_c respectively, unless specifically stated otherwise.
- Complete functionality may be described throughout the entire document; any page or diagram may have been simplified to convey a topic and may not be inclusive of all requirements.
- Any specific requirement takes precedence over a general statement.
- Any functionality not specifically stated here within is considered undefined, illegal, and not supported, and can result in unknown operation.
- Addressing is denoted as BG[*n*] for bank group, BA[*n*] for bank address, and A[*n*] for row/col address.
- The NOP command is not allowed, except when exiting maximum power savings mode or when entering gear-down mode, and only a DES command should be used.
- Not all features described within this document may be available on the Rev. A (first) version.

Micron Technology, Inc. reserves the right to change products or specifications without notice.
© 2018 Micron Technology, Inc. All rights reserved.

- Not all specifications listed are finalized industry standards; best conservative estimates have been provided when an industry standard has not been finalized.
- Although it is implied throughout the specification, the DRAM must be used after V_{DD} has reached the stable power-on level, which is achieved by toggling CKE at least once every 8192 × ^{t}REFI. However, in the event CKE is fixed HIGH, toggling CS_n at least once every 8192 × ^{t}REFI is an acceptable alternative. Placing the DRAM into self refresh mode also alleviates the need to toggle CKE.
- Not all features designated in the data sheet may be supported by earlier die revisions due to late definition by JEDEC.
- A x16 device's DQ bus is comprised of two bytes. If only one of the bytes needs to be used, use the lower byte for data transfers and terminate the upper byte as noted:
  - Connect UDQS_t to VDDQ or VSS/ VSSQ via a resistor in the 200Ω range.
  - Connect UDQS_c to the opposite rail via a resistor in the same 200Ω range.
  - Connect UDM to VDDQ via a large (10,000Ω) pull-up resistor.
  - Connect UDBI to VDDQ via a large (10,000Ω) pull-up resistor.
  - Connect DQ [15:8] individually to VDDQ via a large (10,000Ω) resistors, or float DQ [15:8] .

Definitions of the Device-Pin Signal Level

- HIGH: A device pin is driving the logic 1 state.
- LOW: A device pin is driving the logic 0 state.
- High-Z: A device pin is tri-state.
- ODT: A device pin terminates with the ODT setting, which could be terminating or tri-state depending on the mode register setting.

Definitions of the Bus Signal Level

- HIGH: One device on the bus is HIGH, and all other devices on the bus are either ODT or High-Z. The voltage level on the bus is nominally V_{DDQ}.
- LOW: One device on the bus is LOW, and all other devices on the bus are either ODT or High-Z. The voltage level on the bus is nominally $V_{OL(DC)}$ if ODT was enabled, or V_{SSQ} if High-Z.
- High-Z: All devices on the bus are High-Z. The voltage level on the bus is undefined as the bus is floating.
- ODT: At least one device on the bus is ODT, and all others are High-Z. The voltage level on the bus is nominally V_{DDQ}.
- The specification requires 8,192 refresh commands within 64ms between 0°C and 85°C. This allows for a ^{t}REFI of 7.8125µs (the use of "7.8µs" is truncated from 7.8125µs). The specification also requires 8,192 refresh commands within 32ms between 85°C and 95°C. This allows for a ^{t}REFI of 3.90625µs (the use of "3.9µs" is truncated from 3.90625µs).

Micron Technology, Inc. reserves the right to change products or specifications without notice.
© 2018 Micron Technology, Inc. All rights reserved.

Functional Block Diagrams

DDR4 SDRAM is a high-speed, CMOS dynamic random access memory. It is internally configured as an 16-bank (4-banks per Bank Group) DRAM.

Figure 2: 4 Gig x 4 Functional Block Diagram

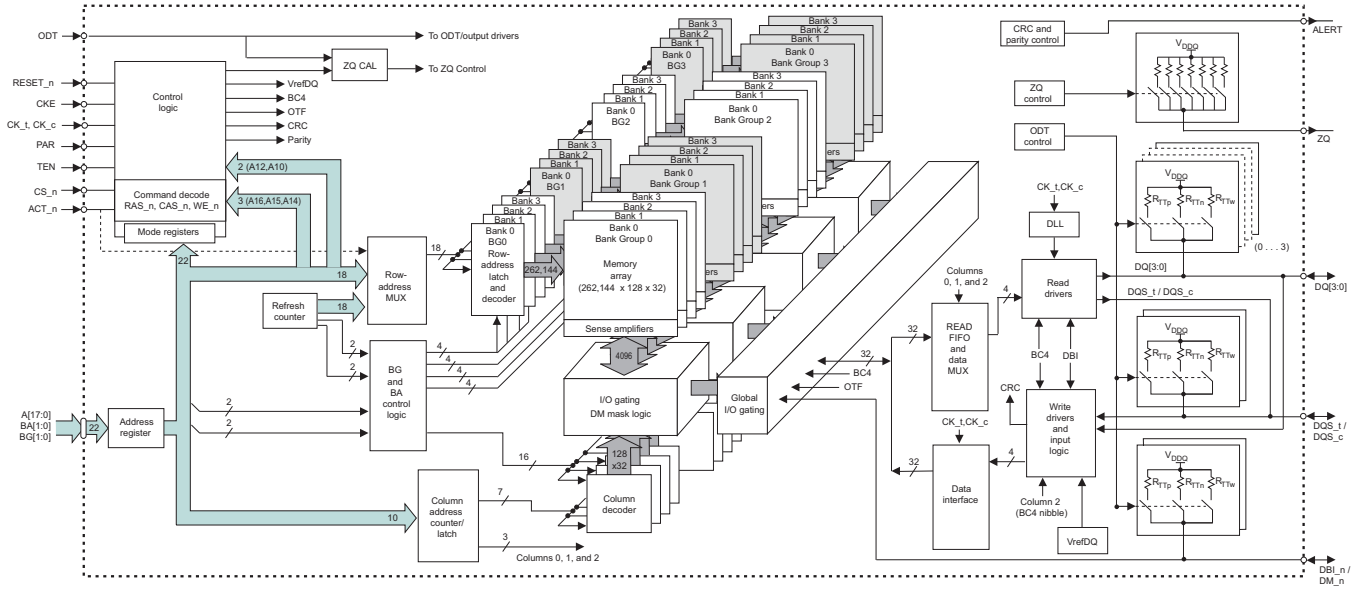

Figure 3: 2 Gig x 8 Functional Block Diagram

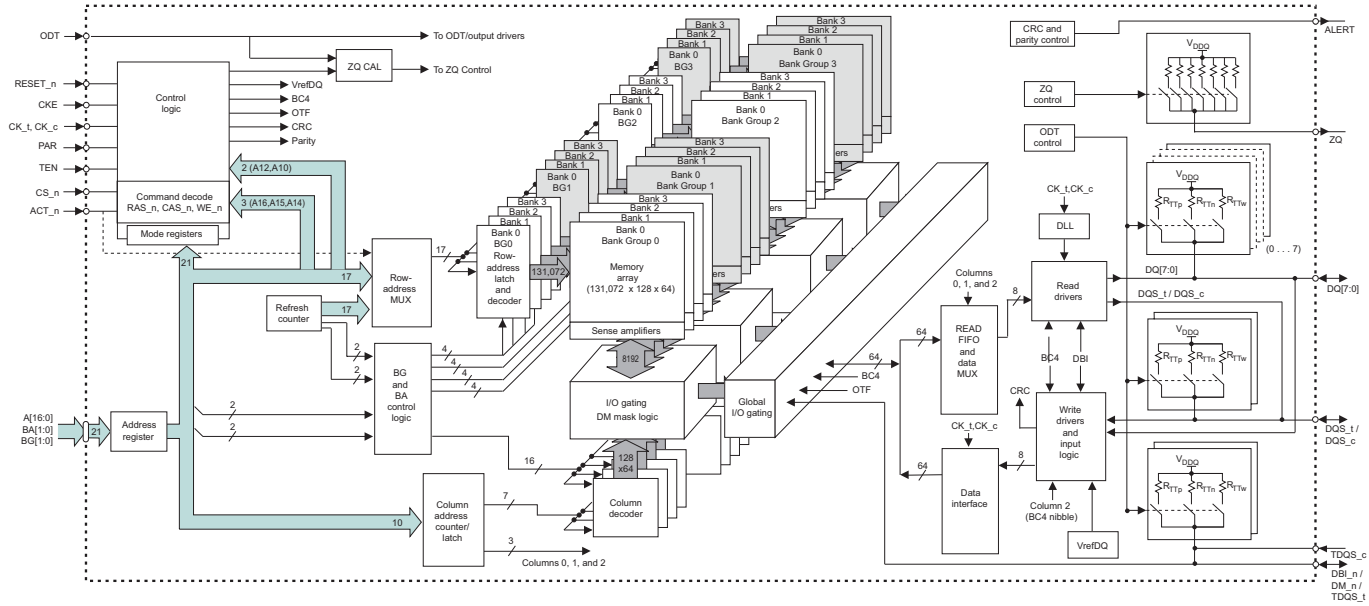

Micron Technology, Inc. reserves the right to change products or specifications without notice.
© 2018 Micron Technology, Inc. All rights reserved.

Figure 4: 1 Gig x 16 Functional Block Diagram

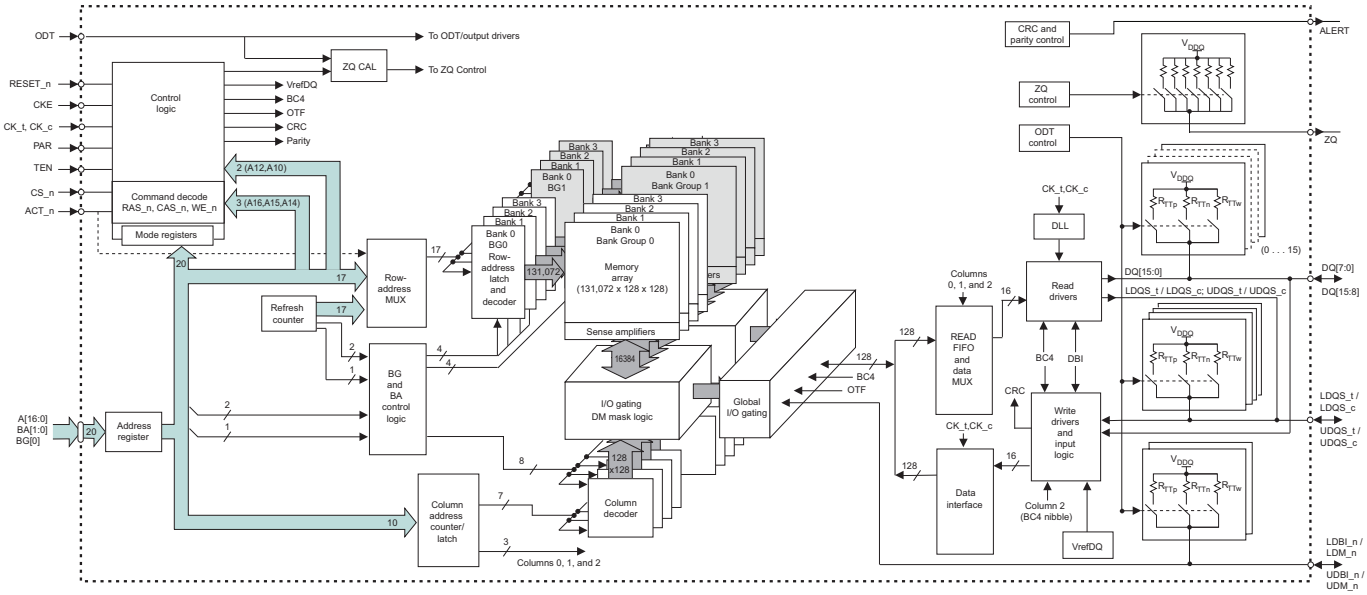

Micron Technology, Inc. reserves the right to change products or specifications without notice.
© 2018 Micron Technology, Inc. All rights reserved.

Ball Assignments

Figure 5: 78-Ball x4, x8 Ball Assignments

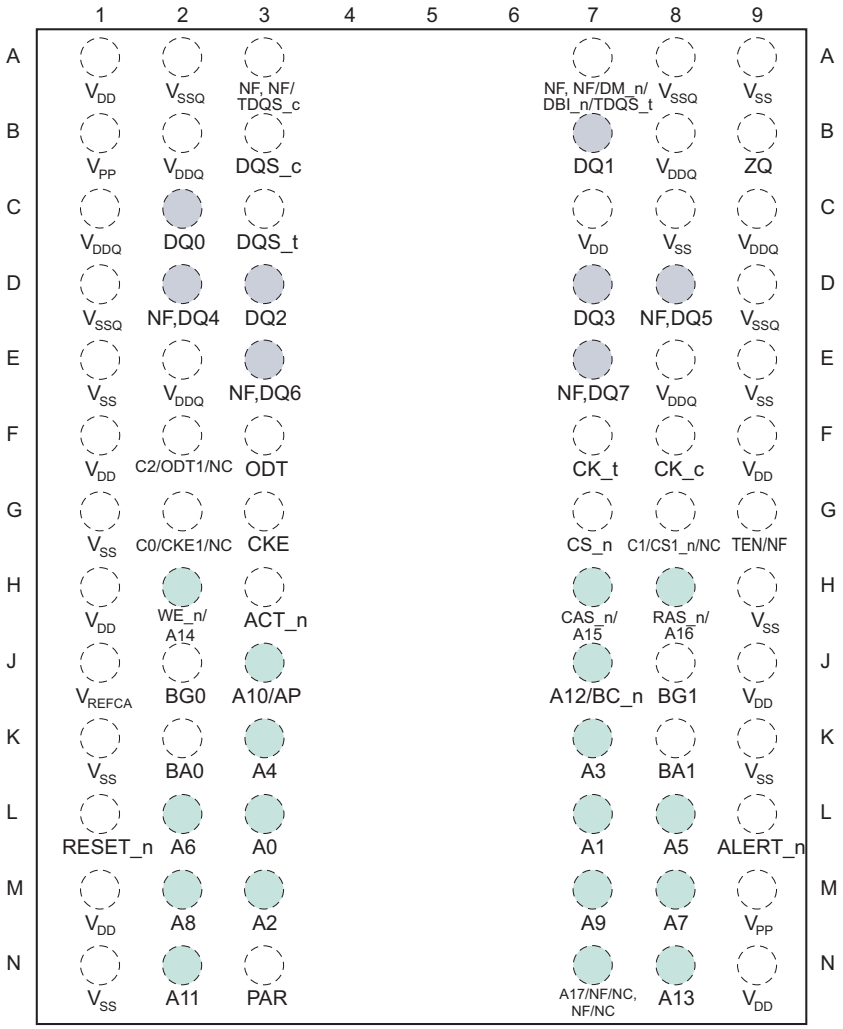

Notes: 1. See Ball Descriptions.
2. A comma "," separates the configuration; a slash "/" defines a mode register selectable function, command/address function, density, or package dependence.
3. Address bits (including bank groups) are density- and configuration-dependent (see Addressing).

Micron Technology, Inc. reserves the right to change products or specifications without notice.
© 2018 Micron Technology, Inc. All rights reserved.

Figure 6: 96-Ball x16 Ball Assignments

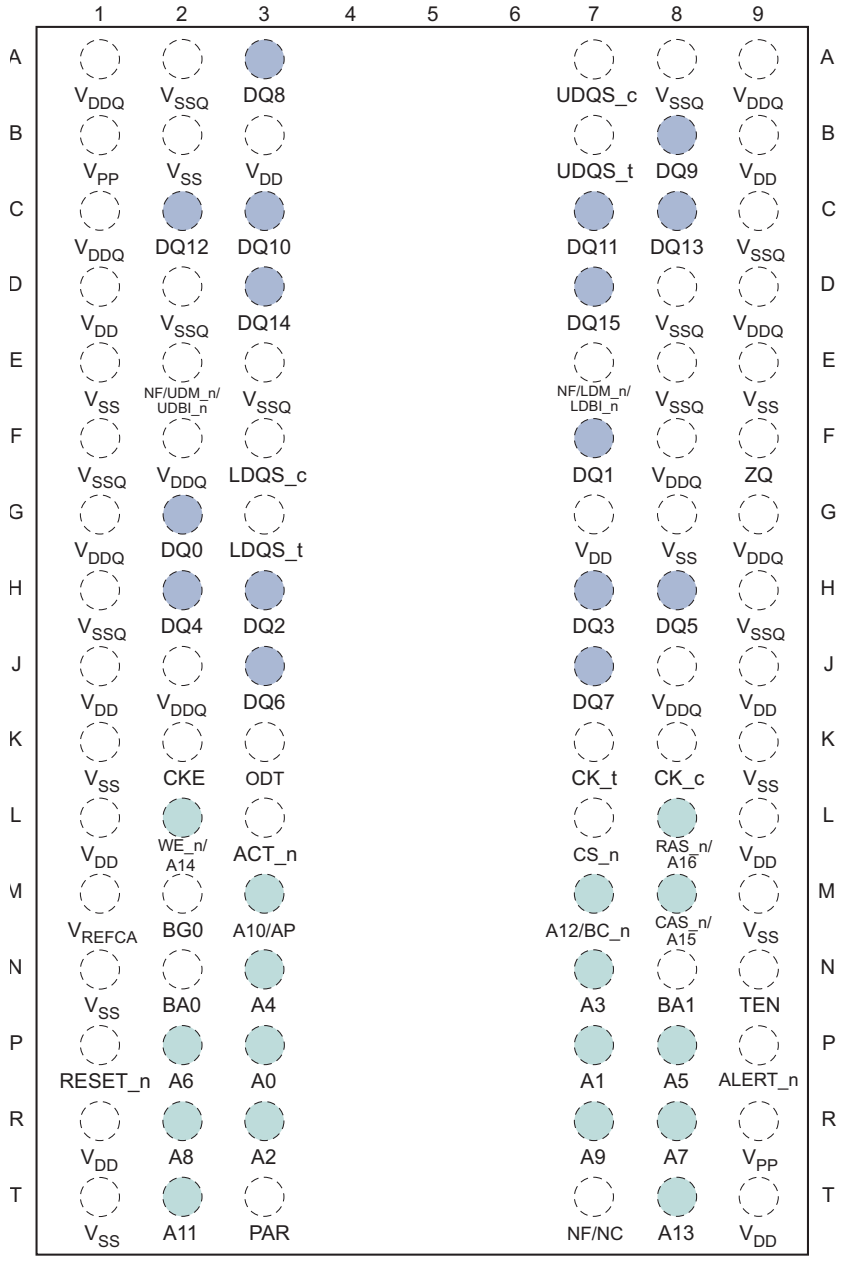

Notes: 1. See Ball Descriptions.
2. A slash "/" defines a mode register selectable function, command/address function, density, or package dependence.
3. Address bits (including bank groups) are density- and configuration-dependent (see Addressing).

Micron Technology, Inc. reserves the right to change products or specifications without notice.
© 2018 Micron Technology, Inc. All rights reserved.

Ball Descriptions

The pin description table below is a comprehensive list of all possible pins for DDR4 devices. All pins listed may not be supported on the device defined in this data sheet. See the Ball Assignments section to review all pins used on this device.

Table 3: Ball Descriptions

Symbol	Type	Description
A[17:0]	Input	**Address inputs:** Provide the row address for ACTIVATE commands and the column address for READ/WRITE commands to select one location out of the memory array in the respective bank. (A10/AP, A12/BC_n, WE_n/A14, CAS_n/A15, RAS_n/A16 have additional functions, see individual entries in this table.) The address inputs also provide the op-code during the MODE REGISTER SET command. A16 is used on some 8Gb and 16Gb parts. A17 connection is part-number specific; Contact vendor for more information.
A10/AP	Input	**Auto precharge:** A10 is sampled during READ and WRITE commands to determine whether auto precharge should be performed to the accessed bank after a READ or WRITE operation. (HIGH = auto precharge; LOW = no auto precharge.) A10 is sampled during a PRECHARGE command to determine whether the PRECHARGE applies to one bank (A10 LOW) or all banks (A10 HIGH). If only one bank is to be precharged, the bank is selected by the bank group and bank addresses.
A12/BC_n	Input	**Burst chop:** A12/BC_n is sampled during READ and WRITE commands to determine if burst chop (on-the-fly) will be performed. (HIGH = no burst chop; LOW = burst chopped). See the Command Truth Table.
ACT_n	Input	**Command input:** ACT_n indicates an ACTIVATE command. When ACT_n (along with CS_n) is LOW, the input pins RAS_n/A16, CAS_n/A15, and WE_n/A14 are treated as row address inputs for the ACTIVATE command. When ACT_n is HIGH (along with CS_n LOW), the input pins RAS_n/ A16, CAS_n/A15, and WE_n/A14 are treated as normal commands that use the RAS_n, CAS_n, and WE_n signals. See the Command Truth Table.
BA[1:0]	Input	**Bank address inputs:** Define the bank (within a bank group) to which an ACTIVATE, READ, WRITE, or PRECHARGE command is being applied. Also determines which mode register is to be accessed during a MODE REGISTER SET command.
BG[1:0]	Input	**Bank group address inputs:** Define the bank group to which an ACTIVATE, READ, WRITE, or PRECHARGE command is being applied. Also determines which mode register is to be accessed during a MODE REGISTER SET command. BG[1:0] are used in the x4 and x8 configurations. BG1 is not used in the x16 configuration.
C0/CKE1, C1/CS1_n, C2/ODT1	Input	**Stack address inputs:** These inputs are used only when devices are stacked; that is, they are used in 2H, 4H, and 8H stacks for x4 and x8 configurations (these pins are not used in the x16 configuration, and are NC on the x4/x8 SDP). DDR4 will support a traditional DDP package, which uses these three signals for control of the second die (CS1_n, CKE1, ODT1). DDR4 is not expected to support a traditional QDP package. For all other stack configurations, such as a 4H or 8H, it is assumed to be a single-load (master/slave) type of configuration where C0, C1, and C2 are used as chip ID selects in conjunction with a single CS_n, CKE, and ODT signal.
CK_t, CK_c	Input	**Clock:** Differential clock inputs. All address, command, and control input signals are sampled on the crossing of the positive edge of CK_t and the negative edge of CK_c.

Micron Technology, Inc. reserves the right to change products or specifications without notice.
© 2018 Micron Technology, Inc. All rights reserved.

Table 3: Ball Descriptions (Continued)

Symbol	Type	Description
CKE	Input	**Clock enable:** CKE HIGH activates and CKE LOW deactivates the internal clock signals, device input buffers, and output drivers. Taking CKE LOW provides PRECHARGE POWER-DOWN and SELF REFRESH operations (all banks idle), or active power-down (row active in any bank). CKE is asynchronous for self refresh exit, however, timing parameters such as ^{t}XS are still calculated from the first rising clock edge where CKE HIGH satisfies ^{t}IS. After V_{REFCA} has become stable during the power-on and initialization sequence, it must be maintained during all operations (including SELF REFRESH). CKE must be maintained HIGH throughout read and write accesses. Input buffers (excluding CK_t, CK_c, ODT, RESET_n, and CKE) are disabled during power-down. Input buffers (excluding CKE and RESET_n) are disabled during self refresh.
CS_n	Input	**Chip select:** All commands are masked when CS_n is registered HIGH. CS_n provides for external rank selection on systems with multiple ranks. CS_n is considered part of the command code.
DM_n, UDM_n LDM_n	Input	**Input data mask:** DM_n is an input mask signal for write data. Input data is masked when DM is sampled LOW coincident with that input data during a write access. DM is sampled on both edges of DQS. DM is not supported on x4 configurations. The UDM_n and LDM_n pins are used in the x16 configuration: UDM_n is associated with DQ[15:8]; LDM_n is associated with DQ[7:0]. The DM, DBI, and TDQS functions are enabled by mode register settings. See the Data Mask section.
ODT	Input	**On-die termination:** ODT (registered HIGH) enables termination resistance internal to the DDR4 SDRAM. When enabled, ODT (R_{TT}) is applied only to each DQ, DQS_t, DQS_c, DM_n/DBI_n/TDQS_t, and TDQS_c signal for the x4 and x8 configurations (when the TDQS function is enabled via mode register). For the x16 configuration, R_{TT} is applied to each DQ, UDQS_t, UDQS_c, LDQS_t, LDQS_c, UDM_n, and LDM_n signal. The ODT pin will be ignored if the mode registers are programmed to disable R_{TT}.
PAR	Input	**Parity for command and address:** This function can be enabled or disabled via the mode register. When enabled, the parity signal covers all command and address inputs, including ACT_n, RAS_n/A16, CAS_n/A15, WE_n/A14, A[17:0], A10/AP, A12/BC_n, BA[1:0], and BG[1:0] with C0, C1, and C2 on 3DS only devices. Control pins NOT covered by the parity signal are CS_n, CKE, and ODT. Unused address pins that are density- and configuration-specific should be treated internally as 0s by the DRAM parity logic. Command and address inputs will have parity check performed when commands are latched via the rising edge of CK_t and when CS_n is LOW.
RAS_n/A16, CAS_n/A15, WE_n/A14	Input	**Command inputs:** RAS_n/A16, CAS_n/A15, and WE_n/A14 (along with CS_n and ACT_n) define the command and/or address being entered. See the ACT_n description in this table.
RESET_n	Input	**Active LOW asynchronous reset:** Reset is active when RESET_n is LOW, and inactive when RESET_n is HIGH. RESET_n must be HIGH during normal operation. RESET_n is a CMOS rail-to-rail signal with DC HIGH and LOW at 80% and 20% of V_{DD} (960 mV for DC HIGH and 240 mV for DC LOW).
TEN	Input	**Connectivity test mode:** TEN is active when HIGH and inactive when LOW. TEN must be LOW during normal operation. TEN is a CMOS rail-to-rail signal with DC HIGH and LOW at 80% and 20% of V_{DD} (960mV for DC HIGH and 240mV for DC LOW). On Micron 3DS devices, connectivity test mode is not supported and the TEN pin should be considered NF maintained LOW at all times.

Micron Technology, Inc. reserves the right to change products or specifications without notice.
© 2018 Micron Technology, Inc. All rights reserved.

Table 3: Ball Descriptions (Continued)

Symbol	Type	Description
DQ	I/O	**Data input/output:** Bidirectional data bus. DQ represents DQ[3:0], DQ[7:0], and DQ[15:0] for the x4, x8, and x16 configurations, respectively. If write CRC is enabled via mode register, the write CRC code is added at the end of data burst. Any one or all of DQ0, DQ1, DQ2, and DQ3 may be used to monitor the internal V_{REF} level during test via mode register setting MR[4] A[4] = HIGH, training times change when enabled. During this mode, the R_{TT} value should be set to High-Z. This measurement is for verification purposes and is NOT an external voltage supply pin.
DBI_n, UDBI_n, LDBI_n	I/O	**DBI input/output:** Data bus inversion. DBI_n is an input/output signal used for data bus inversion in the x8 configuration. UDBI_n and LDBI_n are used in the x16 configuration; UDBI_n is associated with DQ[15:8], and LDBI_n is associated with DQ[7:0]. The DBI feature is not supported on the x4 configuration. DBI is not supported for 3DS devices and should be disabled in MR5. DBI can be configured for both READ (output) and WRITE (input) operations depending on the mode register settings. The DM, DBI, and TDQS functions are enabled by mode register settings. See the Data Bus Inversion section.
DQS_t, DQS_c, UDQS_t, UDQS_c, LDQS_t, LDQS_c	I/O	**Data strobe:** Output with READ data, input with WRITE data. Edge-aligned with READ data, centered-aligned with WRITE data. For the x16, LDQS corresponds to the data on DQ[7:0]; UDQS corresponds to the data on DQ[15:8]. For the x4 and x8 configurations, DQS corresponds to the data on DQ[3:0] and DQ[7:0], respectively. DDR4 SDRAM supports a differential data strobe only and does not support a single-ended data strobe.
ALERT_n	Output	**Alert output:** This signal allows the DRAM to indicate to the system's memory controller that a specific alert or event has occurred. Alerts will include the command/address parity error and the CRC data error when either of these functions is enabled in the mode register.
TDQS_t, TDQS_c	Output	**Termination data strobe:** TDQS_t and TDQS_c are used by x8 DRAMs only. When enabled via the mode register, the DRAM will enable the same R_{TT} termination resistance on TDQS_t and TDQS_c that is applied to DQS_t and DQS_c. When the TDQS function is disabled via the mode register, the DM/TDQS_t pin will provide the DATA MASK (DM) function, and the TDQS_c pin is not used. The TDQS function must be disabled in the mode register for both the x4 and x16 configurations. The DM function is supported only in x8 and x16 configurations.
V_{DD}	Supply	**Power supply:** 1.2V ±0.060V.
V_{DDQ}	Supply	**DQ power supply:** 1.2V ±0.060V.
V_{PP}	Supply	**DRAM activating power supply:** 2.5V –0.125V/+0.250V.
V_{REFCA}	Supply	Reference voltage for control, command, and address pins.
V_{SS}	Supply	Ground.
V_{SSQ}	Supply	DQ ground.
ZQ	Reference	**Reference ball for ZQ calibration:** This ball is tied to an external 240Ω resistor (RZQ), which is tied to V_{SSQ}.
RFU	–	Reserved for future use.
NC	–	**No connect:** No internal electrical connection is present.
NF	–	**No function:** Internal connection is present but has no function.

Micron Technology, Inc. reserves the right to change products or specifications without notice.
© 2018 Micron Technology, Inc. All rights reserved.

Package Dimensions

Figure 7: 78-Ball FBGA – x4, x8 (VA)

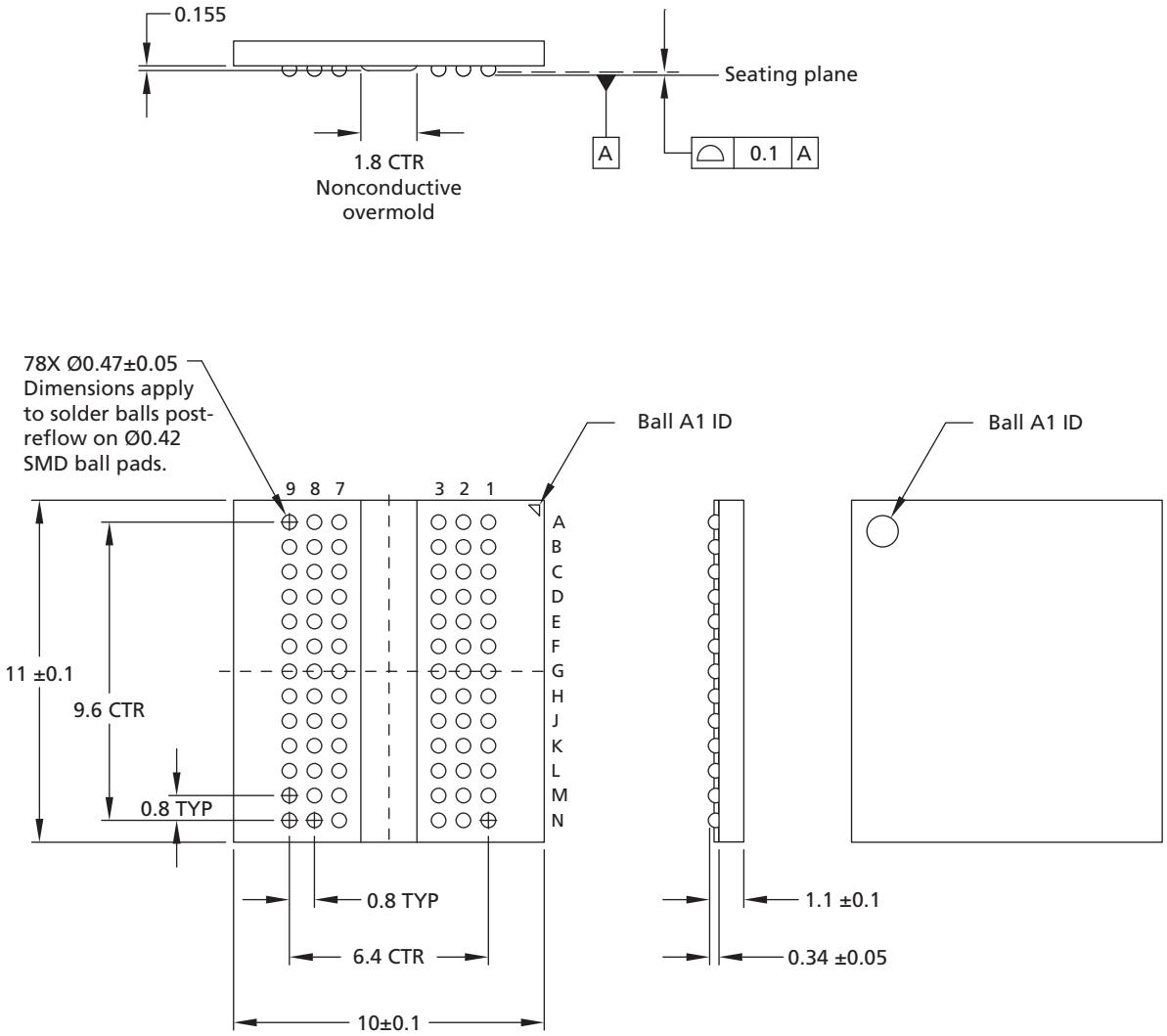

Notes: 1. All dimensions are in millimeters.
2. Solder ball material: SAC302 (96.8% Sn, 3% Ag, 0.2% Cu).

Micron Technology, Inc. reserves the right to change products or specifications without notice.
© 2018 Micron Technology, Inc. All rights reserved.

Figure 8: 78-Ball FBGA – x4, x8 (JC)

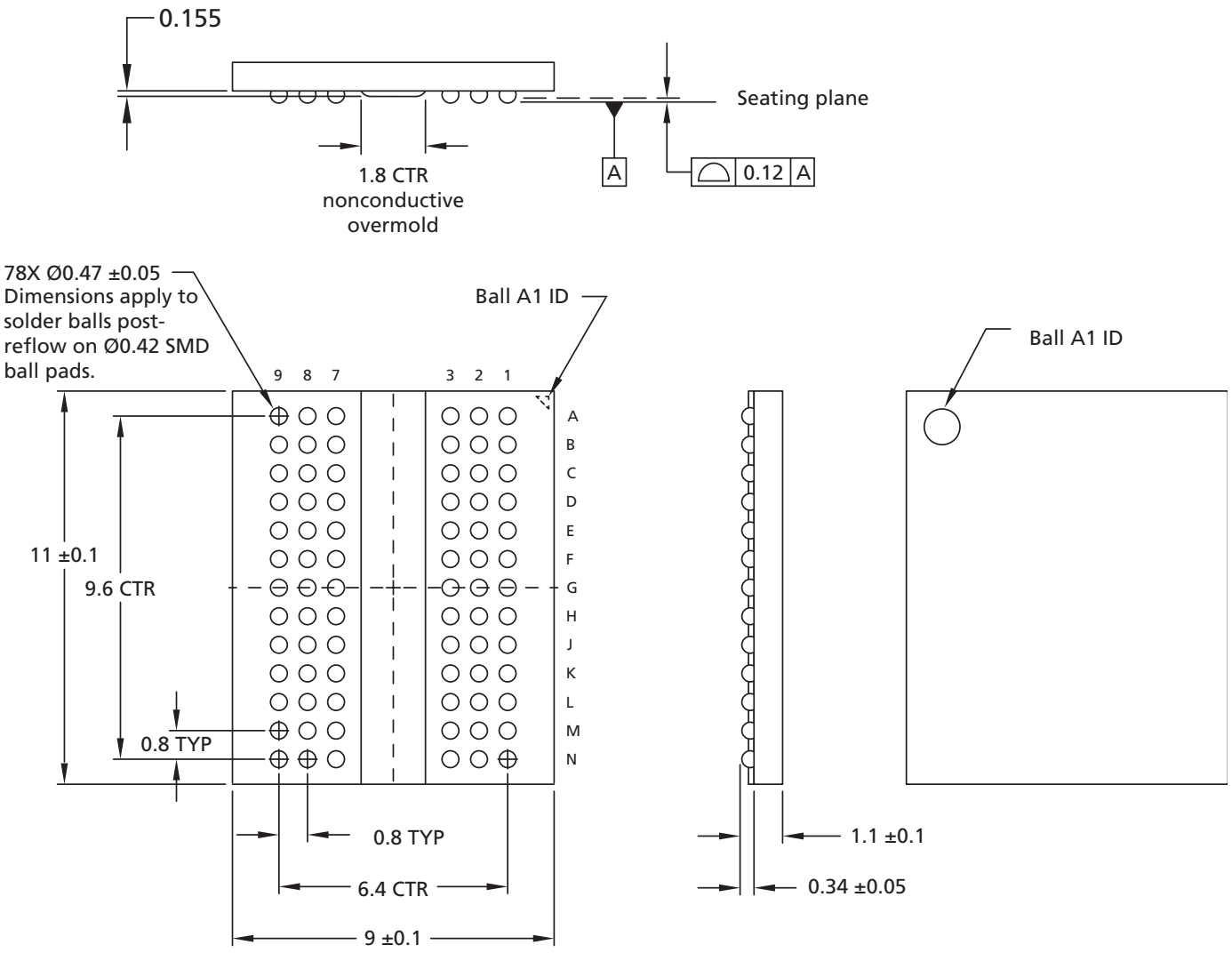

Notes: 1. All dimensions are in millimeters.
2. Solder ball material: SAC302 (96.8% Sn, 3% Ag, 0.2% Cu).

Micron Technology, Inc. reserves the right to change products or specifications without notice.
© 2018 Micron Technology, Inc. All rights reserved.

Figure 9: 78-Ball FBGA – x4, x8 (SA)

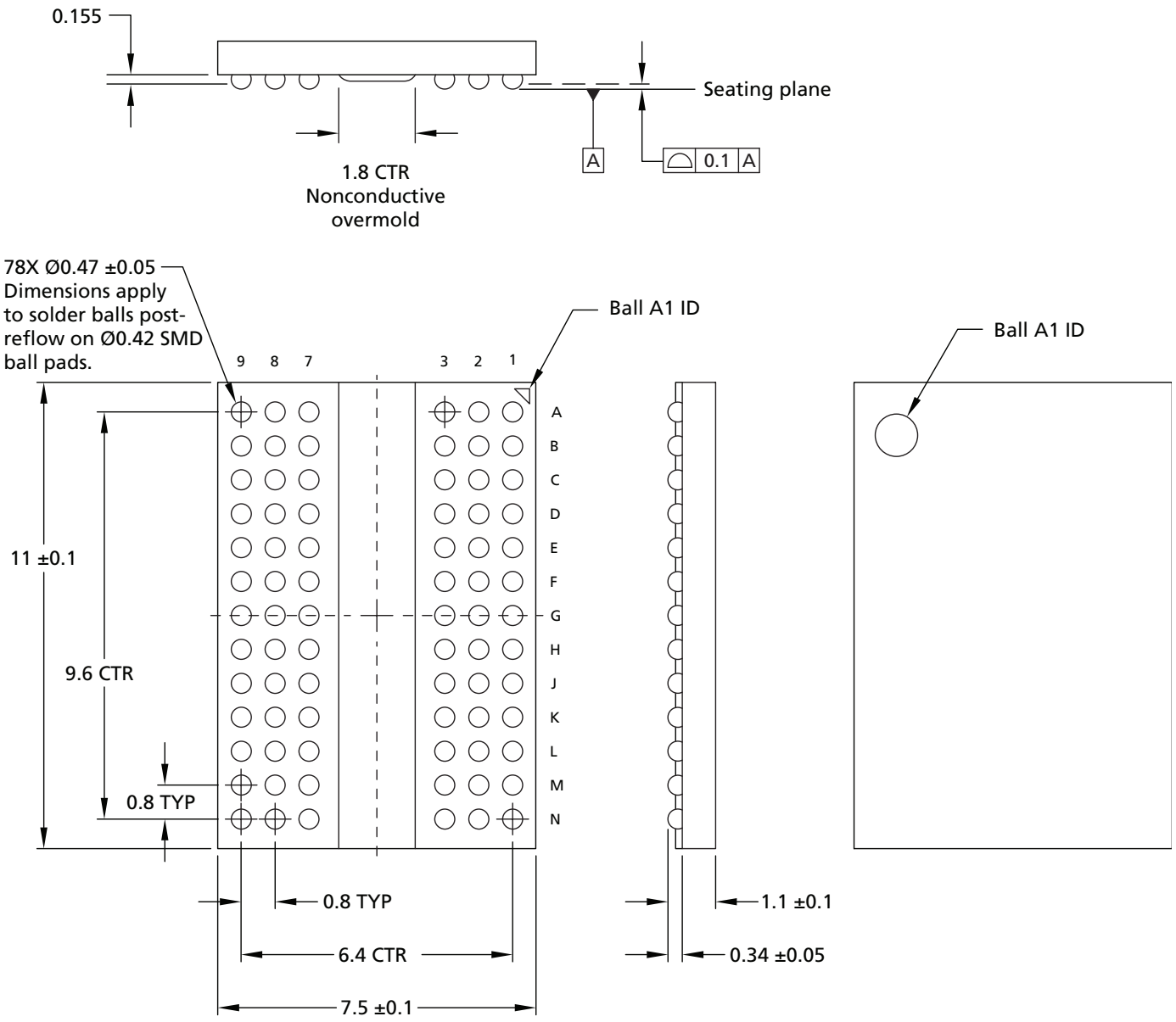

Notes: 1. All dimensions are in millimeters.
2. Solder ball material: SAC305 (96.5% Sn, 3% Ag, 0.5% Cu).

Micron Technology, Inc. reserves the right to change products or specifications without notice.
© 2018 Micron Technology, Inc. All rights reserved.

Figure 10: 96-Ball FBGA – x16 (RC)

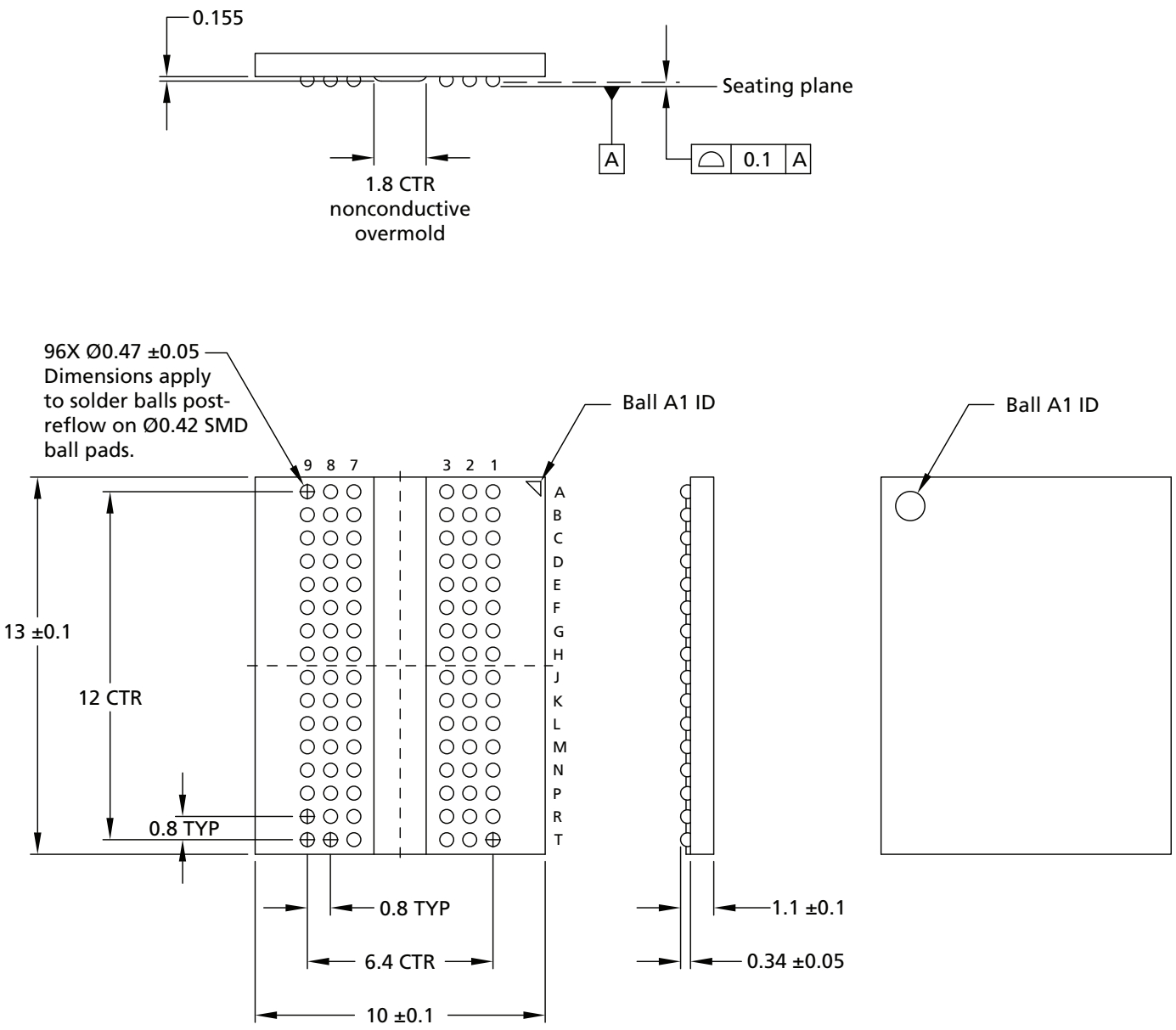

Notes: 1. All dimensions are in millimeters.
2. Solder ball material: SAC302 (96.8% Sn, 3% Ag, 0.2% Cu).

Micron Technology, Inc. reserves the right to change products or specifications without notice.
© 2018 Micron Technology, Inc. All rights reserved.

Figure 11: 96-Ball FBGA – x16 (KD)

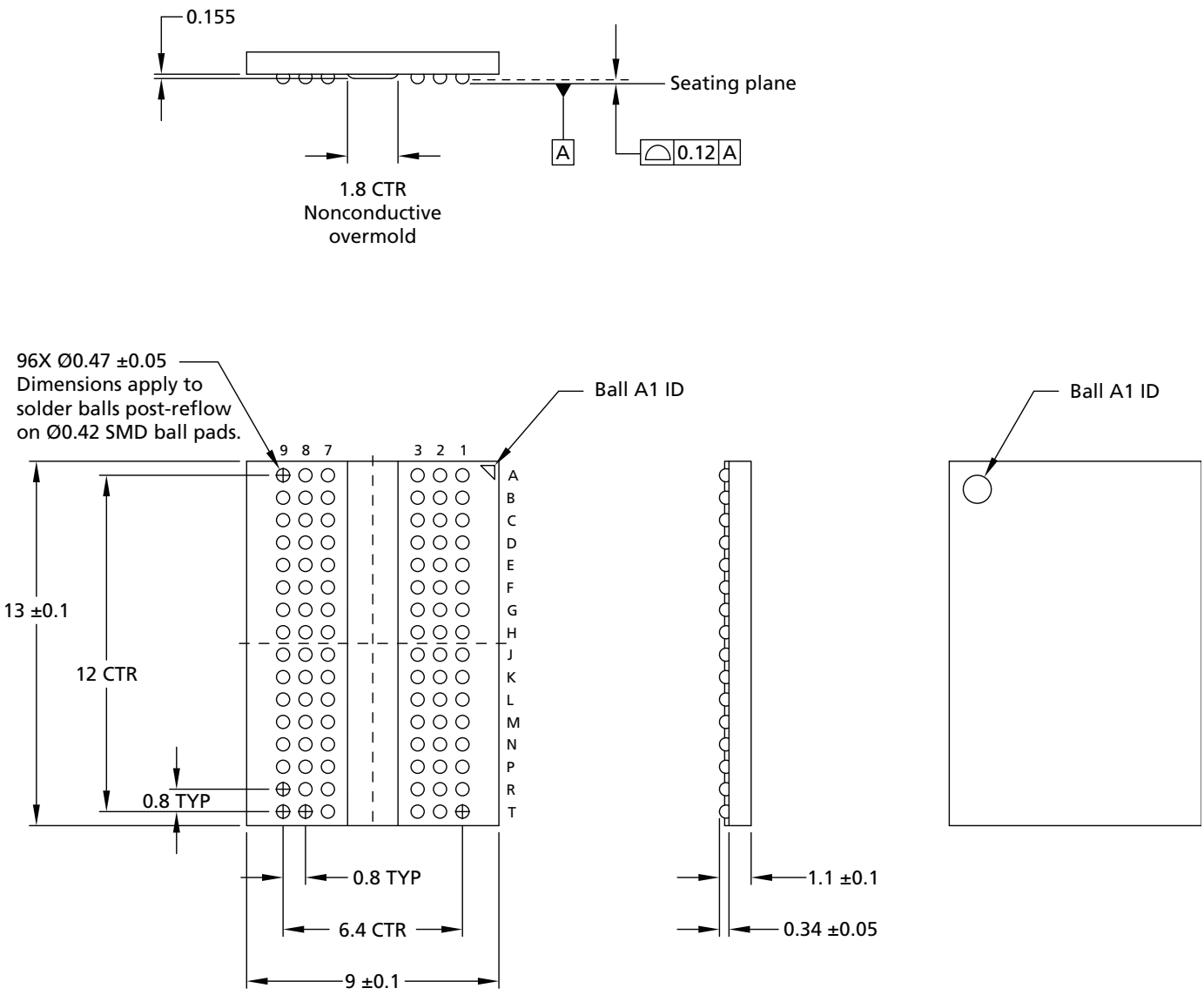

Notes: 1. All dimensions are in millimeters.
2. Solder ball material: SAC302 (96.8% Sn, 3% Ag, 0.2% Cu).

Micron Technology, Inc. reserves the right to change products or specifications without notice.
© 2018 Micron Technology, Inc. All rights reserved.

Figure 12: 96-Ball FBGA – x16 (TB)

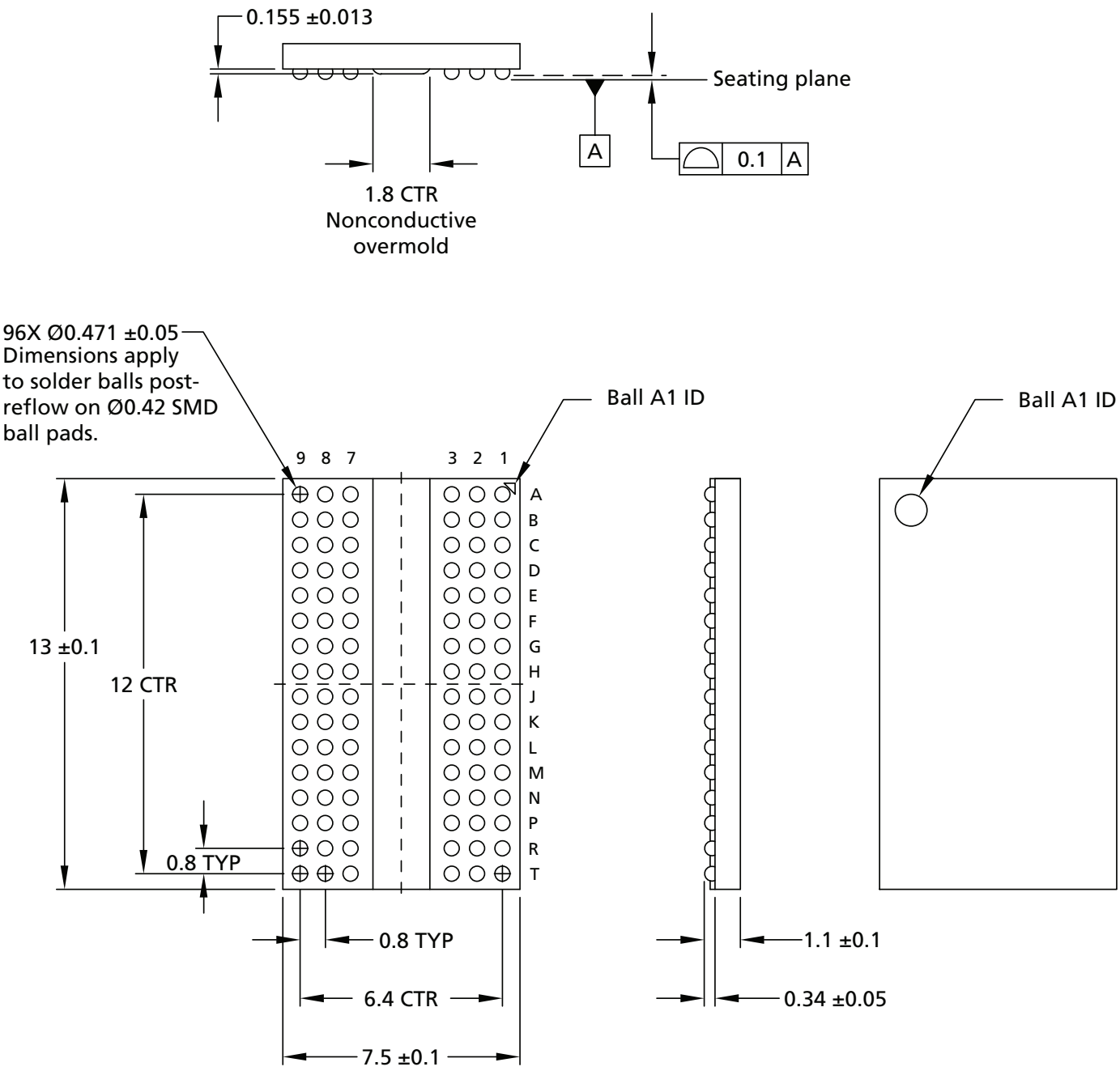

Notes: 1. All dimensions are in millimeters.
2. Solder ball material: SAC305 (96.5% Sn, 3% Ag, 0.5% Cu).

Micron Technology, Inc. reserves the right to change products or specifications without notice.
© 2018 Micron Technology, Inc. All rights reserved.

State Diagram

This simplified state diagram provides an overview of the possible state transitions and the commands to control them. Situations involving more than one bank, the enabling or disabling of on-die termination, and some other events are not captured in full detail.

Figure 13: Simplified State Diagram



Micron Technology, Inc. reserves the right to change products or specifications without notice.
© 2018 Micron Technology, Inc. All rights reserved.

Table 4: State Diagram Command Definitions

Command	Description
ACT	Active
MPR	Multipurpose register
MRS	Mode register set
PDE	Enter power-down
PDX	Exit power-down
PRE	Precharge
PREA	Precharge all
READ	RD, RDS4, RDS8
READ A	RDA, RDAS4, RDAS8
REF	Refresh, fine granularity refresh
RESET	Start reset procedure
SRE	Self refresh entry
SRX	Self refresh exit
TEN	Boundary scan mode enable
WRITE	WR, WRS4, WRS8 with/without CRC
WRITE A	WRA, WRAS4, WRAS8 with/without CRC
ZQCL	ZQ calibration long
ZQCS	ZQ calibration short

Notes: 1. See the Command Truth Table for more details.

Micron Technology, Inc. reserves the right to change products or specifications without notice.
© 2018 Micron Technology, Inc. All rights reserved.

Functional Description

The DDR4 SDRAM is a high-speed dynamic random-access memory internally configured as sixteen banks (4 bank groups with 4 banks for each bank group) for x4/x8 devices, and as eight banks for each bank group (2 bank groups with 4 banks each) for x16 devices. The device uses double data rate (DDR) architecture to achieve high-speed operation. DDR4 architecture is essentially an 8*n*-prefetch architecture with an interface designed to transfer two data words per clock cycle at the I/O pins. A single read or write access for a device module effectively consists of a single 8*n*-bit-wide, four-clock-cycle-data transfer at the internal DRAM core and eight corresponding *n*-bit-wide, one-half-clock-cycle data transfers at the I/O pins.

Read and write accesses to the device are burst-oriented. Accesses start at a selected location and continue for a burst length of eight or a chopped burst of four in a programmed sequence. Operation begins with the registration of an ACTIVE command, which is then followed by a READ or WRITE command. The address bits registered coincident with the ACTIVE command are used to select the bank and row to be accessed (BG[1:0] select the bank group for x4/x8, and BG0 selects the bank group for x16; BA[1:0] select the bank, and A[17:0] select the row. See the Addressing section for more details). The address bits registered coincident with the READ or WRITE command are used to select the starting column location for the burst operation, determine if the auto PRECHARGE command is to be issued (via A10), and select BC4 or BL8 mode on-the-fly (OTF) (via A12) if enabled in the mode register.

Prior to normal operation, the device must be powered up and initialized in a predefined manner. The following sections provide detailed information covering device reset and initialization, register definition, command descriptions, and device operation.

NOTE: The use of the NOP command is allowed only when exiting maximum power saving mode or when entering gear-down mode.

Micron Technology, Inc. reserves the right to change products or specifications without notice.
© 2018 Micron Technology, Inc. All rights reserved.

RESET and Initialization Procedure

To ensure proper device function, the power-up and reset initialization default values for the following mode register (MR) settings are defined as:

- Gear-down mode (MR3 A[3]): 0 = 1/2 rate
- Per-DRAM addressability (MR3 A[4]): 0 = disable
- Maximum power-saving mode (MR4 A[1]): 0 = disable
- CS to command/address latency (MR4 A[8:6]): 000 = disable
- CA parity latency mode (MR5 A[2:0]): 000 = disable
- Hard post package repair mode (MR4 A[13]): 0 = disable
- Soft post package repair mode (MR4 A[5]): 0 = disable

Power-Up and Initialization Sequence

The following sequence is required for power-up and initialization:

1. Apply power (RESET_n and TEN should be maintained below 0.2 × V_{DD} while supplies ramp up; all other inputs may be undefined). When supplies have ramped to a valid stable level, RESET_n must be maintained below 0.2 × V_{DD} for a minimum of ^{t}PW_RESET_L and TEN must be maintained below 0.2 × V_{DD} for a minimum of 700µs. CKE is pulled LOW anytime before RESET_n is de-asserted (minimum time of 10ns). The power voltage ramp time between 300mV to $V_{DD,min}$ must be no greater than 200ms, and during the ramp, V_{DD} must be greater than or equal to V_{DDQ} and (V_{DD} - V_{DDQ}) < 0.3V. V_{PP} must ramp at the same time or up to 10 minutes prior to V_{DD}, and V_{PP} must be equal to or higher than V_{DD} at all times. The total time for which V_{PP} is powered and V_{DD} is unpowered should not exceed 360 cumulative hours. After V_{DD} has ramped and reached a stable level, RESET_n must go high within 10 minutes. After RESET_n goes high, the initialization sequence must be started within 3 seconds. For debug purposes, the 10 minute and 3 second delay limits may be extended to 60 minutes each provided the DRAM is operated in this debug mode for no more than 360 cumulative hours.
   During power-up, the supply slew rate is governed by the limits stated in the table below and either condition A or condition B listed below must be met.

Table 5: Supply Power-up Slew Rate

Symbol	Min	Max	Unit	Comment
V_{DD}_SL, V_{DDQ}_SL, V_{PP}_SL	0.004	600	V/ms	Measured between 300mV and 80% of supply minimum
V_{DD}_ona	N/A	200	ms	V_{DD} maximum ramp time from 300mV to V_{DD} minimum
V_{DDQ}_ona	N/A	200	ms	V_{DDQ} maximum ramp time from 300mV to V_{DDQ} minimum

Notes: 1. 20 MHz band-limited measurement.

   – Condition A:
   - Apply V_{PP} without any slope reversal before or at the same time as V_{DD} and V_{DDQ}.
   - V_{DD} and V_{DDQ} are driven from a single-power converter output and apply V_{DD}/V_{DDQ} without any slope reversal before or at the same time as V_{TT} and V_{REFCA}.
   - The voltage levels on all balls other than V_{DD}, V_{DDQ}, V_{SS}, and V_{SSQ} must be less than or equal to V_{DDQ} and V_{DD} on one side and must be greater than or equal to V_{SSQ} and V_{SS} on the other side.
   - V_{TT} is limited to 0.76V MAX when the power ramp is complete.
   - V_{REFCA} tracks V_{DD}/2.

Micron Technology, Inc. reserves the right to change products or specifications without notice.
© 2018 Micron Technology, Inc. All rights reserved.

– Condition B:
  - Apply V_{PP} without any slope reversal before or at the same time as V_{DD}.
  - Apply V_{DD} without any slope reversal before or at the same time as V_{DDQ}.
  - Apply V_{DDQ} without any slope reversal before or at the same time as V_{TT} and V_{REFCA}.
  - The voltage levels on all pins other than V_{PP}, V_{DD}, V_{DDQ}, V_{SS}, and V_{SSQ} must be less than or equal to V_{DDQ} and V_{DD} on one side and must be larger than or equal to V_{SSQ} and V_{SS} on the other side.

2. After RESET_n is de-asserted, wait for a minimum of 500µs, but no longer than 3 seconds, before allowing CKE to be registered HIGH at clock edge Td. During this time, the device will start internal state initialization; this will be done independently of external clocks. A reasonable attempt was made in the design to power up with the following default MR settings: gear-down mode (MR3 A[3]): 0 = 1/2 rate; per-DRAM addressability (MR3 A[4]): 0 = disable; maximum power-down (MR4 A[1]): 0 = disable; CS to command/address latency (MR4 A[8:6]): 000 = disable; CA parity latency mode (MR5 A[2:0]): 000 = disable. However, it should be assumed that at power up the MR settings are undefined and should be programmed as shown below.
3. Clocks (CK_t, CK_c) need to be started and stabilized for at least 10ns or 5 ^{t}CK (whichever is larger) before CKE is registered HIGH at clock edge Td. Because CKE is a synchronous signal, the corresponding setup time to clock (^{t}IS) must be met. Also, a DESELECT command must be registered (with ^{t}IS setup time to clock) at clock edge Td. After the CKE is registered HIGH after RESET, CKE needs to be continuously registered HIGH until the initialization sequence is finished, including expiration of ^{t}DLLK and ^{t}ZQinit.
4. The device keeps its ODT in High-Z state as long as RESET_n is asserted. Further, the SDRAM keeps its ODT in High-Z state after RESET_n de-assertion until CKE is registered HIGH. The ODT input signal may be in an undefined state until ^{t}IS before CKE is registered HIGH. When CKE is registered HIGH, the ODT input signal may be statically held either LOW or HIGH. If $R_{TT(NOM)}$ is to be enabled in MR1, the ODT input signal must be statically held LOW. In all cases, the ODT input signal remains static until the power-up initialization sequence is finished, including the expiration of ^{t}DLLK and ^{t}ZQinit.
5. After CKE is registered HIGH, wait a minimum of RESET CKE EXIT time, ^{t}XPR, before issuing the first MRS command to load mode register (^{t}XPR = MAX (^{t}XS, 5 × ^{t}CK).
6. Issue MRS command to load MR3 with all application settings, wait ^{t}MRD.
7. Issue MRS command to load MR6 with all application settings, wait ^{t}MRD.
8. Issue MRS command to load MR5 with all application settings, wait ^{t}MRD.
9. Issue MRS command to load MR4 with all application settings, wait ^{t}MRD.
10. Issue MRS command to load MR2 with all application settings, wait ^{t}MRD.
11. Issue MRS command to load MR1 with all application settings, wait ^{t}MRD.
12. Issue MRS command to load MR0 with all application settings, wait ^{t}MOD.
13. Issue a ZQCL command to start ZQ calibration.
14. Wait for ^{t}DLLK and ^{t}ZQinit to complete.
15. The device will be ready for normal operation. Once the DRAM has been initialized, if the DRAM is in an idle state longer than 960ms, then either (a) REF commands must be issued within ^{t}REFI constraints (specification for posting allowed) or (b) CKE or CS_n must toggle once within every 960ms interval of idle time. For debug purposes, the 960ms delay limit maybe extended to 60 minutes provided the DRAM is operated in this debug mode for no more than 360 cumulative hours.
16. Optional MBIST-PPR mode can be entered by setting MR4:A0 to 1, followed by subsequent MR0 guard key sequences, then DRAM will drive ALERT_n to LOW. DRAM will drive ALERT_n to HIGH

Micron Technology, Inc. reserves the right to change products or specifications without notice.
© 2018 Micron Technology, Inc. All rights reserved.

to indicate that this operation is completed. MBIST-PPR mode can take place anytime after Tk. Note that no exit sequence or re-initialization is needed after MBIST completes; As soon as ALERT_N goes HIGH and ^{t}IS is satisfied, MR0 must be re-written to the pre guard key state, then and the DRAM is immediately ready to receive valid commands.

A stable valid V_{DD} level is a set DC level (0Hz to 250 KHz) and must be no less than $V_{DD,min}$ and no greater than $V_{DD,max}$. If the set DC level is altered anytime after initialization, the DLL reset and calibrations must be performed again after the new set DC level is stable. AC noise of ±60mV (greater than 250 KHz) is allowed on V_{DD} provided the noise doesn't alter V_{DD} to less than $V_{DD,min}$ or greater than $V_{DD,max}$.

A stable valid V_{DDQ} level is a set DC level (0Hz to 250 KHz) and must be no less than $V_{DDQ,min}$ and no greater than $V_{DDQ,max}$. If the set DC level is altered anytime after initialization, the DLL reset and calibrations must be performed again after the new set DC level is stable. AC noise of ±60mV (greater than 250 KHz) is allowed on V_{DDQ} provided the noise doesn't alter V_{DDQ} to less than $V_{DDQ,min}$ or greater than $V_{DDQ,max}$.

A stable valid V_{PP} level is a set DC level (0Hz to 250 KHz) and must be no less than $V_{PP,min}$ and no greater than $V_{PP,max}$. If the set DC level is altered anytime after initialization, the DLL reset and calibrations must be performed again after the new set DC level is stable. AC noise of ±120mV (greater than 250 KHz) is allowed on V_{PP} provided the noise doesn't alter V_{PP} to less than $V_{PP,min}$ or greater than $V_{PP,max}$.

Figure 14: RESET and Initialization Sequence at Power-On Ramping

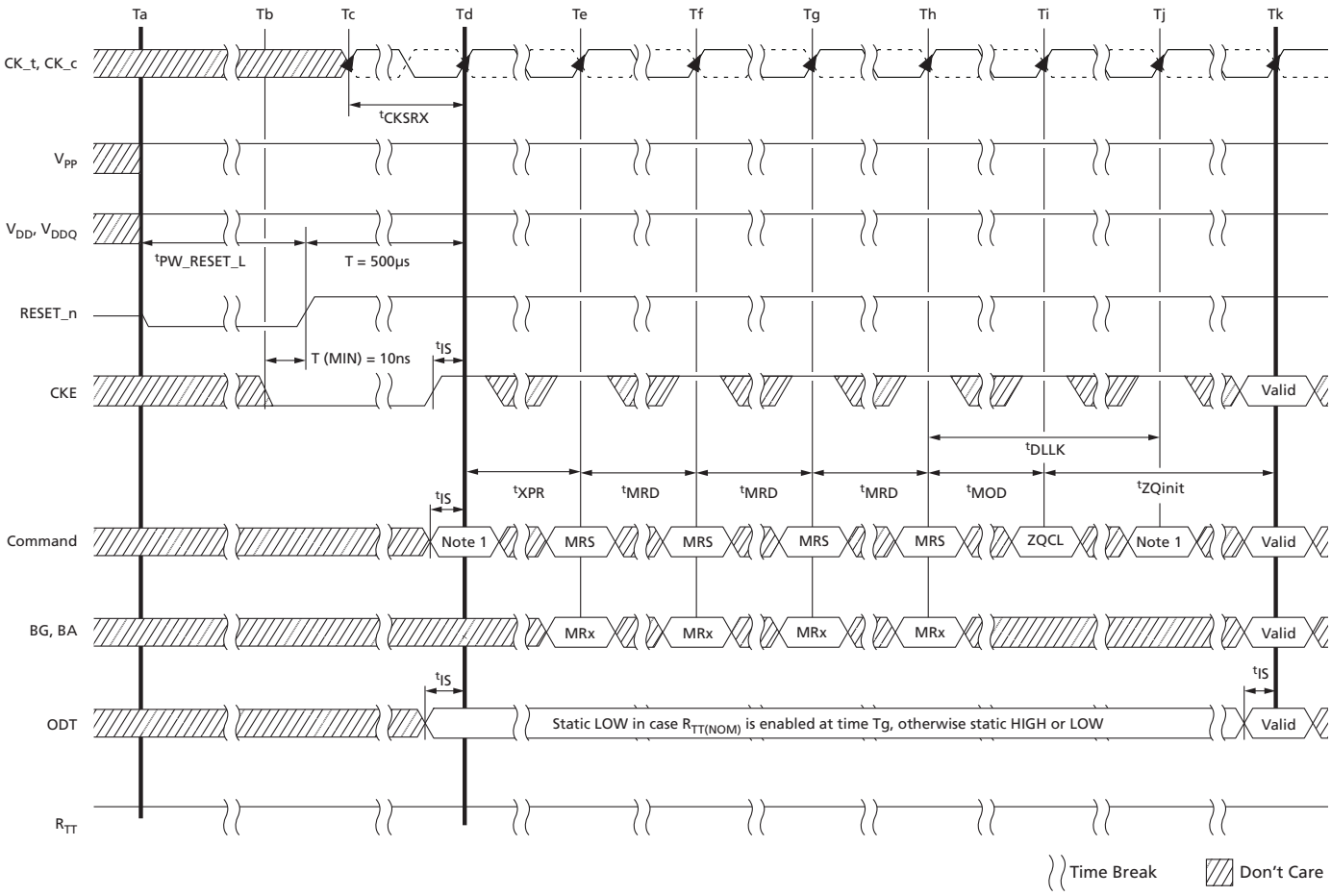

Micron Technology, Inc. reserves the right to change products or specifications without notice.
© 2018 Micron Technology, Inc. All rights reserved.

Notes: 1. From time point Td until Tk, a DES command must be applied between MRS and ZQCL commands.
2. MRS commands must be issued to all mode registers that have defined settings.
3. In general, there is no specific sequence for setting the MRS locations (except for dependent or co-related features, such as ENABLE DLL in MR1 prior to RESET DLL in MR0, for example).
4. TEN is not shown; however, it is assumed to be held LOW.
5. Optional MBIST-PPR may be entered any time after Tk.

RESET Initialization with Stable Power Sequence

The following sequence is required for RESET at no power interruption initialization:

1. Assert RESET_n below 0.2 × V_{DD} any time when reset is needed (all other inputs may be undefined).

   RESET_n needs to be maintained for minimum ^{t}PW_RESET. CKE is pulled LOW before RESET_n being de-asserted (minimum time 10ns).
2. Follow Steps 2 through 10 in the Reset and Initialization Sequence at Power-On Ramping procedure.

When the reset sequence is complete, all counters except the refresh counters have been reset and the device is ready for normal operation.

Figure 15: RESET Procedure at Power Stable Condition

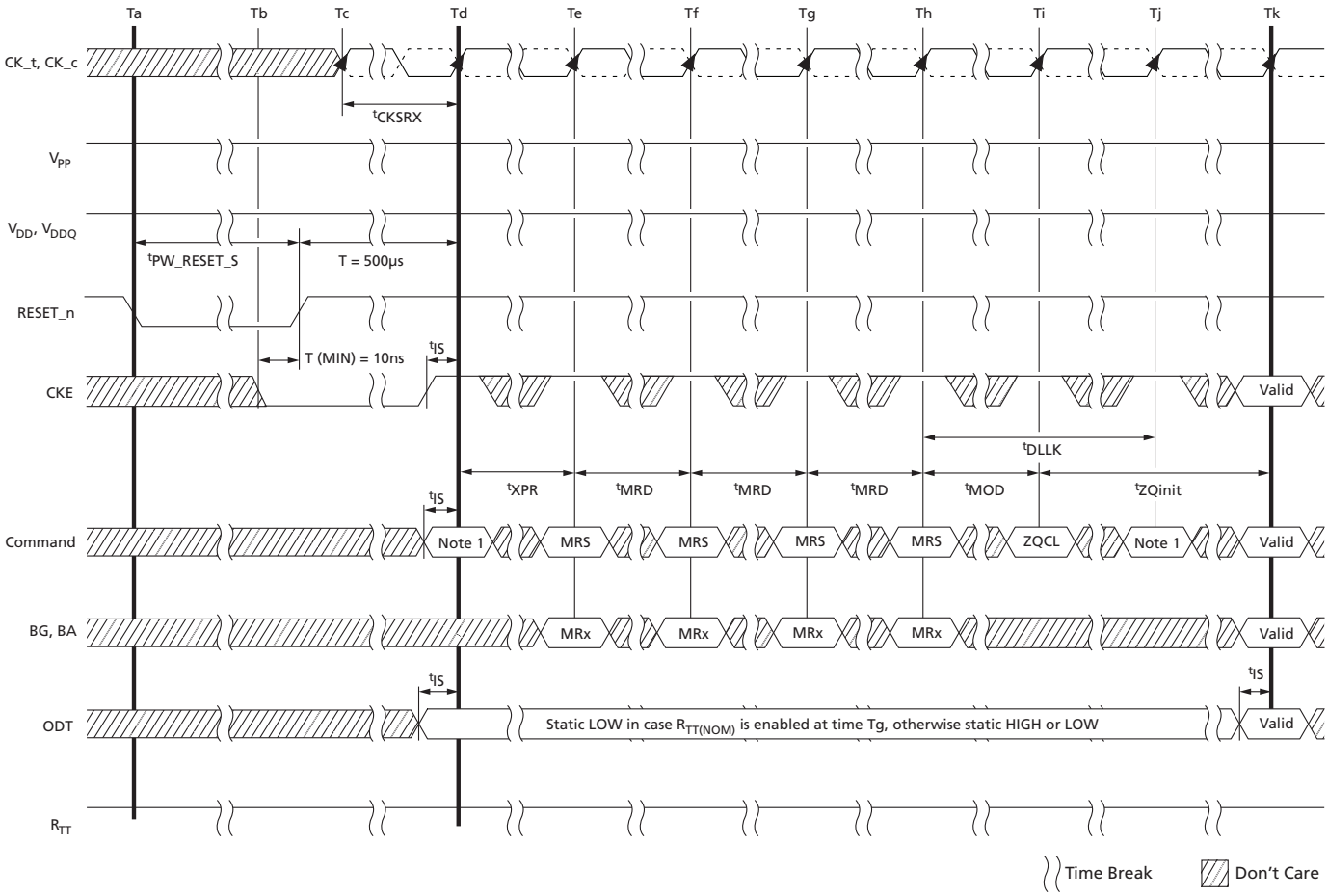

Notes: 1. From time point Td until Tk, a DES command must be applied between MRS and ZQCL commands.
2. MRS commands must be issued to all mode registers that have defined settings.

Micron Technology, Inc. reserves the right to change products or specifications without notice.
© 2018 Micron Technology, Inc. All rights reserved.

3. In general, there is no specific sequence for setting the MRS locations (except for dependent or co-related features, such as ENABLE DLL in MR1 prior to RESET DLL in MR0, for example).
4. TEN is not shown; however, it is assumed to be held LOW.

Uncontrolled Power-Down Sequence

In the event of an uncontrolled ramping down of V_{PP} supply, V_{PP} is allowed to be less than V_{DD} provided the following conditions are met:

- Condition A: V_{PP} and V_{DD}/V_{DDQ} are ramping down (as part of turning off) from normal operating levels.
- Condition B: The amount that V_{PP} may be less than V_{DD}/V_{DDQ} is less than or equal to 500mV.
- Condition C: The time V_{PP} may be less than V_{DD} is ≤10ms per occurrence with a total accumulated time in this state ≤100ms.
- Condition D: The time V_{PP} may be less than 2.0V and above V_{SS} while turning off is ≤15ms per occurrence with a total accumulated time in this state ≤150ms.

Programming Mode Registers

For application flexibility, various functions, features, and modes are programmable in seven mode registers (MR*n*) provided by the device as user defined variables that must be programmed via a MODE REGISTER SET (MRS) command. Because the default values of the mode registers are not defined, contents of mode registers must be fully initialized and/or re-initialized; that is, they must be written after power-up and/or reset for proper operation. The contents of the mode registers can be altered by re-executing the MRS command during normal operation. When programming the mode registers, even if the user chooses to modify only a sub-set of the MRS fields, all address fields within the accessed mode register must be redefined when the MRS command is issued. MRS and DLL RESET commands do not affect array contents, which means these commands can be executed any time after power-up without affecting the array contents.

The MRS command cycle time, ^{t}MRD, is required to complete the WRITE operation to the mode register and is the minimum time required between the two MRS commands shown in the ^{t}MRD Timing figure.

Some of the mode register settings affect address/command/control input functionality. In these cases, the next MRS command can be allowed when the function being updated by the current MRS command is completed. These MRS commands don't apply ^{t}MRD timing to the next MRS command; however, the input cases have unique MR setting procedures, so refer to individual function descriptions:

- Gear-down mode
- Per-DRAM addressability
- CMD address latency
- CA parity latency mode
- V_{REFDQ} training value
- V_{REFDQ} training mode
- V_{REFDQ} training range

Some mode register settings may not be supported because they are not required by certain speed bins.

Micron Technology, Inc. reserves the right to change products or specifications without notice.
© 2018 Micron Technology, Inc. All rights reserved.

Figure 16: tMRD Timing

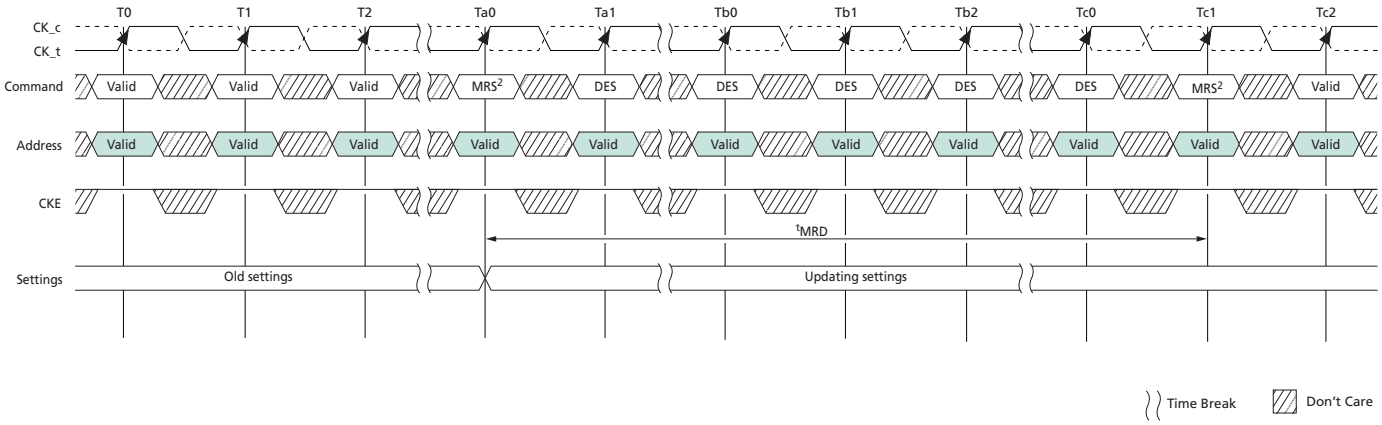

Notes: 1. This timing diagram depicts CA parity mode "disabled" case.

2. tMRD applies to all MRS commands with the following exceptions:
   Gear-down mode
   CA parity latency mode
   CMD address latency
   Per-DRAM addressability mode
   V_{REFDQ} training value, V_{REFDQ} training mode, and V_{REFDQ} training range

The MRS command to nonMRS command delay, tMOD, is required for the DRAM to update features, except for those noted in note 2 in figure below where the individual function descriptions may specify a different requirement. tMOD is the minimum time required from an MRS command to a nonMRS command, excluding DES, as shown in the tMOD Timing figure.

Figure 17: tMOD Timing

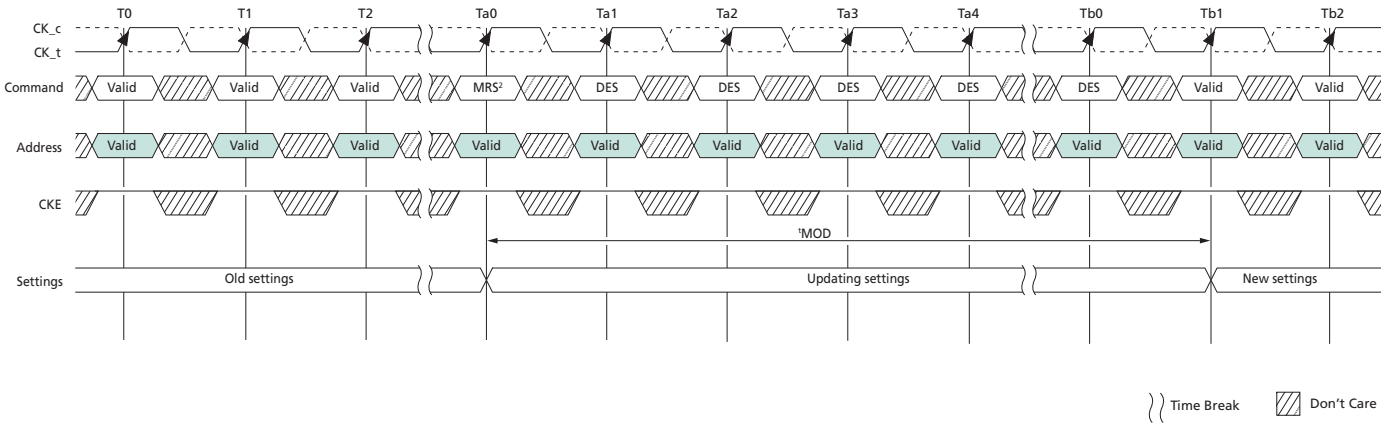

Notes: 1. This timing diagram depicts CA parity mode "disabled" case.

2. tMOD applies to all MRS commands with the following exceptions:
   DLL enable, DLL RESET, Gear-down mode
   V_{REFDQ} training value, internal V_{REF} training monitor, V_{REFDQ} training mode, and V_{REFDQ} training range
   Maximum power savings mode, Per-DRAM addressability mode, and CA parity latency mode

The mode register contents can be changed using the same command and timing requirements during normal operation as long as the device is in idle state; that is, all banks are in the precharged state with tRP satisfied, all data bursts are completed, and CKE is HIGH prior to writing into the mode register. If

Micron Technology, Inc. reserves the right to change products or specifications without notice.
© 2018 Micron Technology, Inc. All rights reserved.

the $R_{TT(NOM)}$ feature is enabled in the mode register prior to and/or after an MRS command, the ODT signal must continuously be registered LOW, ensuring R_{TT} is in an off state prior to the MRS command.

The ODT signal may be registered HIGH after ^{t}MOD has expired. If the $R_{TT(NOM)}$ feature is disabled in the mode register prior to and after an MRS command, the ODT signal can be registered either LOW or HIGH before, during, and after the MRS command. The mode registers are divided into various fields depending on functionality and modes.

In some mode register setting cases, function updating takes longer than ^{t}MOD. This type of MRS does not apply ^{t}MOD timing to the next valid command, excluding DES. These MRS command input cases have unique MR setting procedures, so refer to individual function descriptions.

Micron Technology, Inc. reserves the right to change products or specifications without notice.
© 2018 Micron Technology, Inc. All rights reserved.

Mode Register 0

Mode register 0 (MR0) controls various device operating modes as shown in the following register definition table. Not all settings listed may be available on a die; only settings required for speed bin support are available. MR0 is written by issuing the MRS command while controlling the states of the BG*x*, BA*x*, and A*x* address pins. The mapping of address pins during the MRS command is shown in the following MR0 Register Definition table.

Table 6: Address Pin Mapping

Address bus	BG 1	BG 0	BA 1	BA 0	A17	RAS_n	CAS_n	WE_n	A13	A12	A11	A10	A9	A8	A7	A6	A5	A4	A3	A2	A1	A0
Mode register	21	20	19	18	17	–	–	–	13	12	11	10	9	8	7	6	5	4	3	2	1	0

Notes: 1. RAS_n, CAS_n, and WE_n must be LOW during MODE REGISTER SET command.

Table 7: MR0 Register Definition

Mode Register	Description
21	**RFU** 0 = Must be programmed to 0 1 = Reserved
20:18	**MR select** **000 = MR0** 001 = MR1 010 = MR2 011 = MR3 100 = MR4 101 = MR5 110 = MR6 111 = DNU
17	**N/A on 4Gb and 8Gb, RFU** 0 = Must be programmed to 0 1 = Reserved
13,11:9	**WR (WRITE recovery)/RTP (READ-to-PRECHARGE)** 0000 = 10 / 5 clocks[1] 0001 = 12 / 6 clocks 0010 = 14 / 7 clocks[1] 0011 = 16 / 8 / clocks 0100 = 18 / 9 clocks[1] 0101 = 20 /10 clocks 0110 = 24 / 12 clocks 0111 = 22 / 11 clocks[1] 1000 = 26 / 13 clocks[1] 1001 = 28 / 14 clocks[2] 1010 through 1111 = Reserved
8	**DLL reset** 0 = No 1 = Yes
7	**Test mode (TM) – Manufacturer use only** 0 = Normal operating mode, must be programmed to 0

Micron Technology, Inc. reserves the right to change products or specifications without notice.
© 2018 Micron Technology, Inc. All rights reserved.

Table 7: MR0 Register Definition (Continued)

Mode Register	Description
12, 6:4, 2	**CAS latency (CL) – Delay in clock cycles from the internal READ command to first data-out** 00000 = 9 clocks[1] 00001 = 10 clocks 00010 = 11 clocks[1] 00011 = 12 clocks 00100 = 13 clocks[1] 00101 = 14 clocks 00110 = 15 clocks[1] 00111 = 16 clocks 01000 = 18 clocks 01001 = 20 clocks 01010 = 22 clocks 01011 = 24 clocks 01100 = 23 clocks[1] 01101 = 17 clocks[1] 01110 = 19 clocks[1] 01111 = 21 clocks [1] 10000 = 25 clocks 10001 = 26 clocks 10011 = 28 clocks 10100 = 29 clocks[1] 10101 = 30 clocks 10110 = 31 clocks[1] 10111 = 32 clocks
3	**Burst type (BT) – Data burst ordering within a READ or WRITE burst access** 0 = Nibble sequential 1 = Interleave
1:0	**Burst length (BL) – Data burst size associated with each read or write access** 00 = BL8 (fixed) 01 = BC4 or BL8 (on-the-fly) 10 = BC4 (fixed) 11 = Reserved

Notes: 1. Not allowed when 1/4 rate gear-down mode is enabled.
2. If WR requirement exceeds 28 clocks or RTP exceeds 14 clocks, WR should be set to 28 clocks and RTP should be set to 14 clocks.

Burst Length, Type, and Order

Accesses within a given burst may be programmed to sequential or interleaved order. The ordering of accesses within a burst is determined by the burst length, burst type, and the starting column address as shown in the following table. Burst length options include fixed BC4, fixed BL8, and on-the-fly (OTF), which allows BC4 or BL8 to be selected coincidentally with the registration of a READ or WRITE command via A12/BC_n.

Micron Technology, Inc. reserves the right to change products or specifications without notice.
© 2018 Micron Technology, Inc. All rights reserved.

Table 8: Burst Type and Burst Order

Note 1 applies to the entire table

Burst Length	READ/WRITE	Starting Column Address (A[2, 1, 0])	Burst Type = Sequential (Decimal)	Burst Type = Interleaved (Decimal)	Notes
BC4	READ	0 0 0	0, 1, 2, 3, T, T, T, T	0, 1, 2, 3, T, T, T, T	2, 3
		0 0 1	1, 2, 3, 0, T, T, T, T	1, 0, 3, 2, T, T, T, T	2, 3
		0 1 0	2, 3, 0, 1, T, T, T, T	2, 3, 0, 1, T, T, T, T	2, 3
		0 1 1	3, 0, 1, 2, T, T, T, T	3, 2, 1, 0, T, T, T, T	2, 3
		1 0 0	4, 5, 6, 7, T, T, T, T	4, 5, 6, 7, T, T, T, T	2, 3
		1 0 1	5, 6, 7, 4, T, T, T, T	5, 4, 7, 6, T, T, T, T	2, 3
		1 1 0	6, 7, 4, 5, T, T, T, T	6, 7, 4, 5, T, T, T, T	2, 3
		1 1 1	7, 4, 5, 6, T, T, T, T	7, 6, 5, 4, T, T, T, T	2, 3
	WRITE	0, V, V	0, 1, 2, 3, X, X, X, X	0, 1, 2, 3, X, X, X, X	2, 3
		1, V, V	4, 5, 6, 7, X, X, X, X	4, 5, 6, 7, X, X, X, X	2, 3
BL8	READ	0 0 0	0, 1, 2, 3, 4, 5, 6, 7	0, 1, 2, 3, 4, 5, 6, 7	
		0 0 1	1, 2, 3, 0, 5, 6, 7, 4	1, 0, 3, 2, 5, 4, 7, 6	
		0 1 0	2, 3, 0, 1, 6, 7, 4, 5	2, 3, 0, 1, 6, 7, 4, 5	
		0 1 1	3, 0, 1, 2, 7, 4, 5, 6	3, 2, 1, 0, 7, 6, 5, 4	
		1 0 0	4, 5, 6, 7, 0, 1, 2, 3	4, 5, 6, 7, 0, 1, 2, 3	
		1 0 1	5, 6, 7, 4, 1, 2, 3, 0	5, 4, 7, 6, 1, 0, 3, 2	
		1 1 0	6, 7, 4, 5, 2, 3, 0, 1	6, 7, 4, 5, 2, 3, 0, 1	
		1 1 1	7, 4, 5, 6, 3, 0, 1, 2	7, 6, 5, 4, 3, 2, 1, 0	
	WRITE	V, V, V	0, 1, 2, 3, 4, 5, 6, 7	0, 1, 2, 3, 4, 5, 6, 7	3

Notes: 1. 0...7 bit number is the value of CA[2:0] that causes this bit to be the first read during a burst.
2. When setting burst length to BC4 (fixed) in MR0, the internal WRITE operation starts two clock cycles earlier than for the BL8 mode, meaning the starting point for ^{t}WR and ^{t}WTR will be pulled in by two clocks. When setting burst length to OTF in MR0, the internal WRITE operation starts at the same time as a BL8 (even if BC4 was selected during column time using A12/BC4_n) meaning that if the OTF MR0 setting is used, the starting point for ^{t}WR and ^{t}WTR will not be pulled in by two clocks as described in the BC4 (fixed) case.
3. T = Output driver for data and strobes are in High-Z.
V = Valid logic level (0 or 1), but respective buffer input ignores level on input pins.
X = "Don't Care."

CAS Latency

The CAS latency (CL) setting is defined in the MR0 Register Definition table. CAS latency is the delay, in clock cycles, between the internal READ command and the availability of the first bit of output data. The device does not support half-clock latencies. The overall read latency (RL) is defined as additive latency (AL) + CAS latency (CL): RL = AL + CL.

Micron Technology, Inc. reserves the right to change products or specifications without notice.
© 2018 Micron Technology, Inc. All rights reserved.

Test Mode

The normal operating mode is selected by MR0[7] and all other bits set to the desired values shown in the MR0 Register Definition table. Programming MR0[7] to a value of 1 places the device into a DRAM manufacturer-defined test mode to be used only by the manufacturer, not by the end user. No operations or functionality is specified if MR0[7] = 1.

Write Recovery (WR)/READ-to-PRECHARGE

The programmed write recovery (WR) value is used for the auto precharge feature along with ^{t}RP to determine ^{t}DAL. WR for auto precharge (MIN) in clock cycles is calculated by dividing ^{t}WR (in ns) by ^{t}CK (in ns) and rounding to the next integer using the rounding algorithms found in the Converting Time-Based Specifications to Clock-Based Requirements section. The WR value must be programmed to be equal to or larger than ^{t}WR (MIN). When both DM and write CRC are enabled in the mode register, the device calculates CRC before sending the write data into the array; ^{t}WR values will change when enabled. If there is a CRC error, the device blocks the WRITE operation and discards the data.

Internal READ-to-PRECHARGE (RTP) command delay for auto precharge (MIN) in clock cycles is calculated by dividing ^{t}RTP (in ns) by ^{t}CK (in ns) and rounding to the next integer using the rounding algorithms found in the Converting Time-Based Specifications to Clock-Based Requirements section. The RTP value in the mode register must be programmed to be equal to or larger than RTP (MIN). The programmed RTP value is used with ^{t}RP to determine the ACT timing to the same bank.

DLL RESET

The DLL reset bit is self-clearing, meaning that it returns to the value of 0 after the DLL RESET function has been issued. After the DLL is enabled, a subsequent DLL RESET should be applied. Any time the DLL RESET function is used, ^{t}DLLK must be met before functions requiring the DLL can be used. Such as READ commands or synchronous ODT operations, for example.

Micron Technology, Inc. reserves the right to change products or specifications without notice.
© 2018 Micron Technology, Inc. All rights reserved.

Mode Register 1

Mode register 1 (MR1) controls various device operating modes as shown in the following register definition table. Not all settings listed may be available on a die; only settings required for speed bin support are available. MR1 is written by issuing the MRS command while controlling the states of the BG*x*, BA*x*, and A*x* address pins. The mapping of address pins during the MRS command is shown in the following MR1 Register Definition table.

Table 9: Address Pin Mapping

Address bus	BG 1	BG 0	BA 1	BA 0	A17	RAS_n	CAS_n	WE_n	A13	A12	A11	A10	A9	A8	A7	A6	A5	A4	A3	A2	A1	A0
Mode register	21	20	19	18	17	–	–	–	13	12	11	10	9	8	7	6	5	4	3	2	1	0

Notes: 1. RAS_n, CAS_n, and WE_n must be LOW during MODE REGISTER SET command.

Table 10: MR1 Register Definition

Mode Register	Description
21	**RFU** 0 = Must be programmed to 0 1 = Reserved
20:18	**MR select** 000 = MR0 **001 = MR1** 010 = MR2 011 = MR3 100 = MR4 101 = MR5 110 = MR6 111 = DNU
17	**N/A on 4Gb and 8Gb, RFU** 0 = Must be programmed to 0 1 = Reserved
12	**Data output disable (Qoff) – Output buffer disable** 0 = Enabled (normal operation) 1 = Disabled (both ODI and R_{TT})
11	**Termination data strobe (TDQS) – Additional termination pins (x8 configuration only)** 0 = TDQS disabled 1 = TDQS enabled
10, 9, 8	**Nominal ODT ($R_{TT(NOM)}$) – Data bus termination setting** 000 = $R_{TT(NOM)}$ disabled 001 = RZQ/4 (60 ohm) 010 = RZQ/2 (120 ohm) 011 = RZQ/6 (40 ohm) 100 = RZQ/1 (240 ohm) 101 = RZQ/5 (48 ohm) 110 = RZQ/3 (80 ohm) 111 = RZQ/7 (34 ohm)

Micron Technology, Inc. reserves the right to change products or specifications without notice.
© 2018 Micron Technology, Inc. All rights reserved.

Table 10: MR1 Register Definition (Continued)

Mode Register	Description
7	**Write leveling (WL) – Write leveling mode** 0 = Disabled (normal operation) 1 = Enabled (enter WL mode)
13, 6, 5	**Rx CTLE Control** 000 = Vendor Default 001 = Vendor Defined 010 = Vendor Defined 011 = Vendor Defined 100 = Vendor Defined 101 = Vendor Defined 110 = Vendor Defined 111 = Vendor Defined
4, 3	**Additive latency (AL) – Command additive latency setting** 00 = 0 (AL disabled) 01 = CL - 1[1] 10 = CL - 2 11 = Reserved
2, 1	**Output driver impedance (ODI) – Output driver impedance setting** 00 = RZQ/7 (34 ohm) 01 = RZQ/5 (48 ohm) 10 = Reserved (Although not JEDEC-defined and not tested, this setting will provide RZQ/6 or 40 ohm) 11 = Reserved
0	**DLL enable – DLL enable feature** 0 = DLL disabled 1 = DLL enabled (normal operation)

Notes: 1. Not allowed when 1/4 rate gear-down mode is enabled.

DLL Enable/DLL Disable

The DLL must be enabled for normal operation and is required during power-up initialization and upon returning to normal operation after having the DLL disabled. During normal operation (DLL enabled with MR1[0]) the DLL is automatically disabled when entering the SELF REFRESH operation and is automatically re-enabled upon exit of the SELF REFRESH operation. Any time the DLL is enabled and subsequently reset, ^{t}DLLK clock cycles must occur before a READ or SYNCHRONOUS ODT command can be issued to allow time for the internal clock to be synchronized with the external clock. Failing to wait for synchronization to occur may result in a violation of the ^{t}DQSCK, ^{t}AON, or ^{t}AOF parameters.

During ^{t}DLLK, CKE must continuously be registered HIGH. The device does not require DLL for any WRITE operation, except when $R_{TT(WR)}$ is enabled and the DLL is required for proper ODT operation.

The direct ODT feature is not supported during DLL off mode. The ODT resistors must be disabled by continuously registering the ODT pin LOW and/or by programming the $R_{TT(NOM)}$ bits MR1[9,6,2] = 000 via an MRS command during DLL off mode.

The dynamic ODT feature is not supported in DLL off mode; to disable dynamic ODT externally, use the MRS command to set $R_{TT(WR)}$, MR2[10:9] = 00.

Micron Technology, Inc. reserves the right to change products or specifications without notice.
© 2018 Micron Technology, Inc. All rights reserved.

Output Driver Impedance Control

The output driver impedance of the device is selected by MR1[2,1], as shown in the MR1 Register Definition table.

ODT $R_{TT(NOM)}$ Values

The device is capable of providing three different termination values: $R_{TT(Park)}$, $R_{TT(NOM)}$, and $R_{TT(WR)}$. The nominal termination value, $R_{TT(NOM)}$, is programmed in MR1. A separate value, $R_{TT(WR)}$, may be programmed in MR2 to enable a unique R_{TT} value when ODT is enabled during WRITE operations. The $R_{TT(WR)}$ value can be applied during WRITE commands even when $R_{TT(NOM)}$ is disabled. A third R_{TT} value, $R_{TT(Park)}$, is programed in MR5. $R_{TT(Park)}$ provides a termination value when the ODT signal is LOW.

Additive Latency

The ADDITIVE LATENCY (AL) operation is supported to make command and data buses efficient for sustainable bandwidths in the device. In this operation, the device allows a READ or WRITE command (either with or without auto precharge) to be issued immediately after the ACTIVATE command. The command is held for the time of AL before it is issued inside the device. READ latency (RL) is controlled by the sum of the AL and CAS latency (CL) register settings. WRITE latency (WL) is controlled by the sum of the AL and CAS WRITE latency (CWL) register settings.

Table 11: Additive Latency (AL) Settings

A4	A3	AL
0	0	0 (AL disabled)
0	1	CL - 1
1	0	CL - 2
1	1	Reserved

Notes: 1. AL has a value of CL - 1 or CL - 2 based on the CL values programmed in the MR0 register.

Rx CTLE Control

The Mode Register for Rx CTLE Control MR1[A13,A6,A5] is vendor specific. Since CTLE circuits can not be typically bypassed a disable option is not provided. Instead, a vendor optimized setting is given. It should be noted that the settings are not specifically linear in relationship to the vendor optimized setting, so the host may opt to instead walk through all the provided options and use the setting that works best in their environment.

Write Leveling

For better signal integrity, the device uses fly-by topology for the commands, addresses, control signals, and clocks. Fly-by topology benefits from a reduced number of stubs and their lengths, but it causes flight-time skew between clock and strobe at every DRAM on the DIMM. This makes it difficult for the controller to maintain ^{t}DQSS, ^{t}DSS, and ^{t}DSH specifications. Therefore, the device supports a write leveling feature that allows the controller to compensate for skew.

Output Disable

The device outputs may be enabled/disabled by MR1[12] as shown in the MR1 Register Definition table. When MR1[12] is enabled (MR1[12] = 1) all output pins (such as DQ and DQS) are disconnected

Micron Technology, Inc. reserves the right to change products or specifications without notice.
© 2018 Micron Technology, Inc. All rights reserved.

from the device, which removes any loading of the output drivers. For example, this feature may be useful when measuring module power. For normal operation, set MR1[12] to 0.

Termination Data Strobe

Termination data strobe (TDQS) is a feature of the x8 device and provides additional termination resistance outputs that may be useful in some system configurations. Because this function is available only in a x8 configuration, it must be disabled for x4 and x16 configurations.

While TDQS is not supported in x4 or x16 configurations, the same termination resistance function that is applied to the TDQS pins is applied to the DQS pins when enabled via the mode register.

The TDQS, DBI, and DATA MASK (DM) functions share the same pin. When the TDQS function is enabled via the mode register, the DM and DBI functions are not supported. When the TDQS function is disabled, the DM and DBI functions can be enabled separately.

Table 12: TDQS Function Matrix

TDQS	Data Mask (DM)	WRITE DBI	READ DBI
Disabled	**Enabled**	Disabled	**Enabled** or disabled
	Disabled	**Enabled**	**Enabled** or disabled
	Disabled	Disabled	**Enabled** or disabled
Enabled	Disabled	Disabled	Disabled

Micron Technology, Inc. reserves the right to change products or specifications without notice.
© 2018 Micron Technology, Inc. All rights reserved.

Mode Register 2

Mode register 2 (MR2) controls various device operating modes as shown in the following register definition table. Not all settings listed may be available on a die; only settings required for speed bin support are available. MR2 is written by issuing the MRS command while controlling the states of the BG*x*, BA*x*, and A*x* address pins. The mapping of address pins during the MRS command is shown in the following MR2 Register Definition table.

Table 13: Address Pin Mapping

Address bus	BG 1	BG 0	BA 1	BA 0	A17	RAS_n	CAS_n	WE_n	A13	A12	A11	A10	A9	A8	A7	A6	A5	A4	A3	A2	A1	A0
Mode register	21	20	19	18	17	–	–	–	13	12	11	10	9	8	7	6	5	4	3	2	1	0

Notes: 1. RAS_n, CAS_n, and WE_n must be LOW during MODE REGISTER SET command.

Table 14: MR2 Register Definition

Mode Register	Description
21	**RFU** 0 = Must be programmed to 0 1 = Reserved
20:18	**MR select** 000 = MR0 001 = MR1 **010 = MR2** 011 = MR3 100 = MR4 101 = MR5 110 = MR6 111 = DNU
17	**N/A on 4Gb and 8Gb, RFU** 0 = Must be programmed to 0 1 = Reserved
13	**RFU** 0 = Must be programmed to 0 1 = Reserved
12	**WRITE data bus CRC** 0 = Disabled 1 = Enabled
11:9	**Dynamic ODT ($R_{TT(WR)}$) – Data bus termination setting during WRITEs** 000 = $R_{TT(WR)}$ disabled (WRITE does not affect R_{TT} value) 001 = RZQ/2 (120 ohm) 010 = RZQ/1 (240 ohm) 011 = High-Z 100 = RZQ/3 (80 ohm) 101 = Reserved 110 = Reserved 111 = Reserved

Micron Technology, Inc. reserves the right to change products or specifications without notice.
© 2018 Micron Technology, Inc. All rights reserved.

Table 14: MR2 Register Definition (Continued)

Mode Register	Description
7:6	**Low-power auto self refresh (LPASR) – Mode summary** 00 = Manual mode - Normal operating temperature range (T_C: -40°C–85°C) 01 = Manual mode - Reduced operating temperature range (T_C: -40°C–45°C) 10 = Manual mode - Extended operating temperature range (T_C: -40°C–105°C) 11 = ASR mode - Automatically switching among all modes
5:3	**CAS WRITE latency (CWL) – Delay in clock cycles from the internal WRITE command to first data-in 1^{t}CK WRITE preamble** 000 = 9 (DDR4-1600)[1] 001 = 10 (DDR4-1866) 010 = 11 (DDR4-2133/1600)[1] 011 = 12 (DDR4-2400/1866) 100 = 14 (DDR4-2666/2133) 101 = 16 (DDR4-2933,3200/2400) 110 = 18 (DDR4-2666) 111 = 20 (DDR4-2933, 3200)
	CAS WRITE latency (CWL) – Delay in clock cycles from the internal WRITE command to first data-in 2^{t}CK WRITE preamble 000 = N/A 001 = N/A 010 = N/A 011 = N/A 100 = 14 (DDR4-2400) 101 = 16 (DDR4-2666/2400) 110 = 18 (DDR4-2933, 3200/2666) 111 = 20 (DDR4-2933, 3200)
8, 2	**RFU** 0 = Must be programmed to 0 1 = Reserved
1:0	**RFU** 0 = Must be programmed to 0 1 = Reserved

Notes: 1. Not allowed when 1/4 rate gear-down mode is enabled.

CAS WRITE Latency

CAS WRITE latency (CWL) is defined by MR2[5:3] as shown in the MR2 Register Definition table. CWL is the delay, in clock cycles, between the internal WRITE command and the availability of the first bit of input data. The device does not support any half-clock latencies. The overall WRITE latency (WL) is defined as additive latency (AL) + parity latency (PL) + CAS WRITE latency (CWL): WL = AL +PL + CWL.

Low-Power Auto Self Refresh

Low-power auto self refresh (LPASR) is supported in the device. Applications requiring SELF REFRESH operation over different temperature ranges can use this feature to optimize the I_{DD6} current for a given temperature range as specified in the MR2 Register Definition table.

Micron Technology, Inc. reserves the right to change products or specifications without notice.
© 2018 Micron Technology, Inc. All rights reserved.

Dynamic ODT

In certain applications and to further enhance signal integrity on the data bus, it is desirable to change the termination strength of the device without issuing an MRS command. This may be done by configuring the dynamic ODT ($R_{TT(WR)}$) settings in MR2[11:9]. In write leveling mode, only $R_{TT(NOM)}$ is available.

Write Cyclic Redundancy Check Data Bus

The write cyclic redundancy check (CRC) data bus feature during writes has been added to the device. When enabled via the mode register, the data transfer size goes from the normal 8-bit (BL8) frame to a larger 10-bit UI frame, and the extra two UIs are used for the CRC information.

Micron Technology, Inc. reserves the right to change products or specifications without notice.
© 2018 Micron Technology, Inc. All rights reserved.

Mode Register 3

Mode register 3 (MR3) controls various device operating modes as shown in the following register definition table. Not all settings listed may be available on a die; only settings required for speed bin support are available. MR3 is written by issuing the MRS command while controlling the states of the BG*x*, BA*x*, and A*x* address pins. The mapping of address pins during the MRS command is shown in the following MR3 Register Definition table.

Table 15: Address Pin Mapping

Address bus	BG 1	BG 0	BA 1	BA 0	A17	RAS_n	CAS_n	WE_n	A13	A12	A11	A10	A9	A8	A7	A6	A5	A4	A3	A2	A1	A0
Mode register	21	20	19	18	17	–	–	–	13	12	11	10	9	8	7	6	5	4	3	2	1	0

Notes: 1. RAS_n, CAS_n, and WE_n must be LOW during MODE REGISTER SET command.

Table 16: MR3 Register Definition

Mode Register	Description
21	**RFU** 0 = Must be programmed to 0 1 = Reserved
20:18	**MR select** 000 = MR0 001 = MR1 010 = MR2 **011 = MR3** 100 = MR4 101 = MR5 110 = MR6 111 = DNU
17	**N/A on 4Gb and 8Gb, RFU** 0 = Must be programmed to 0 1 = Reserved
13	**RFU** 0 = Must be programmed to 0 1 = Reserved
12:11	**Multipurpose register (MPR) – Read format** 00 = Serial 01 = Parallel 10 = Staggered 11 = Reserved
10:9	**WRITE CMD latency when CRC/DM enabled** 00 = 4CK (DDR4-1600) 01 = 5CK (DDR4-1866/2133/2400/2666) 10 = 6CK (DDR4-2933/3200) 11 = Reserved

Micron Technology, Inc. reserves the right to change products or specifications without notice.
© 2018 Micron Technology, Inc. All rights reserved.

Table 16: MR3 Register Definition (Continued)

Mode Register	Description
8:6	**Fine granularity refresh mode** 000 = Normal mode (fixed 1x) 001 = Fixed 2x 010 = Fixed 4x 011 = Reserved 100 = Reserved 101 = On-the-fly 1x/2x 110 = On-the-fly 1x/4x 111 = Reserved
5	**Temperature sensor status** 0 = Disabled 1 = Enabled
4	**Per-DRAM addressability** 0 = Normal operation (disabled) 1 = Enable
3	**Gear-down mode – Ratio of internal clock to external data rate** 0 = [1:1]; (1/2 rate data) 1 = [2:1]; (1/4 rate data)
2	**Multipurpose register (MPR) access** 0 = Normal operation 1 = Data flow from MPR
1:0	**MPR page select** 00 = Page 0 01 = Page 1 10 = Page 2 11 = Page 3 (restricted for DRAM manufacturer use only)

Multipurpose Register

The multipurpose register (MPR) is used for several features:

- Readout of the contents of the MR*n* registers
- WRITE and READ system patterns used for data bus calibration
- Readout of the error frame when the command address parity feature is enabled

To enable MPR, issue an MRS command to MR3[2] = 1. MR3[12:11] define the format of read data from the MPR. Prior to issuing the MRS command, all banks must be in the idle state (all banks precharged and ^{t}RP met). After MPR is enabled, any subsequent RD or RDA commands will be redirected to a specific mode register.

The mode register location is specified with the READ command using address bits. The MR is split into upper and lower halves to align with a burst length limitation of 8. Power-down mode, SELF REFRESH, and any other nonRD/RDA or nonWR/WRA commands are not allowed during MPR mode. The RESET function is supported during MPR mode, which requires device re-initialization.

WRITE Command Latency When CRC/DM is Enabled

The WRITE command latency (WCL) must be set when both write CRC and DM are enabled for write CRC persistent mode. This provides the extra time required when completing a WRITE burst when write CRC and DM are enabled. This means at data rates less than or equal to 1600 MT/s then 4nCK is used, 5nCK or 6nCK are not allowed; at data rates greater than 1600 MT/s and less than or equal to 2666

Micron Technology, Inc. reserves the right to change products or specifications without notice.
© 2018 Micron Technology, Inc. All rights reserved.

MT/s then 5nCK is used, 4nCK or 6nCK are not allowed; and at data rates greater than 2666 MT/s and less than or equal to 3200 MT/s then 6nCK is used; 4nCK or 5nCK are not allowed.

Fine Granularity Refresh Mode

This mode had been added to DDR4 to help combat the performance penalty due to refresh lockout at high densities. Shortening ^{t}RFC and decreasing cycle time allows more accesses to the chip and allows for increased scheduling flexibility.

Temperature Sensor Status

This mode directs the DRAM to update the temperature sensor status at MPR Page 2, MPR0 [4,3]. The temperature sensor setting should be updated within 32ms; when an MPR read of the temperature sensor status bits occurs, the temperature sensor status should be no older than 32ms.

Per-DRAM Addressability

This mode allows commands to be masked on a per device basis providing any device in a rank (devices sharing the same command and address signals) to be programmed individually. As an example, this feature can be used to program different ODT or V_{REF} values on DRAM devices within a given rank.

Gear-Down Mode

The device defaults in 1/2 rate (1N) clock mode and uses a low frequency MRS command followed by a sync pulse to align the proper clock edge for operating the control lines CS_n, CKE, and ODT when in 1/4 rate (2N) mode. For operation in 1/2 rate mode, no MRS command or sync pulse is required.

Micron Technology, Inc. reserves the right to change products or specifications without notice.
© 2018 Micron Technology, Inc. All rights reserved.

Mode Register 4

Mode register 4 (MR4) controls various device operating modes as shown in the following register definition table. Not all settings listed may be available on a die; only settings required for speed bin support are available. MR4 is written by issuing the MRS command while controlling the states of the BG*x*, BA*x*, and A*x* address pins. The mapping of address pins during the MRS command is shown in the following MR4 Register Definition table.

Table 17: Address Pin Mapping

Address bus	BG 1	BG 0	BA 1	BA 0	A17	RAS_n	CAS_n	WE_n	A13	A12	A11	A10	A9	A8	A7	A6	A5	A4	A3	A2	A1	A0
Mode register	21	20	19	18	17	–	–	–	13	12	11	10	9	8	7	6	5	4	3	2	1	0

Notes: 1. RAS_n, CAS_n, and WE_n must be LOW during MODE REGISTER SET (MRS) command.

Table 18: MR4 Register Definition

Mode Register	Description
21	**RFU** 0 = Must be programmed to 0 1 = Reserved
20:18	**MR select** 000 = MR0 001 = MR1 010 = MR2 011 = MR3 **100 = MR4** 101 = MR5 110 = MR6 111 = DNU
17	**N/A on 4Gb and 8Gb, RFU** 0 = Must be programmed to 0 1 = Reserved
13	**Hard Post Package Repair (hPPR mode)** 0 = Disabled 1 = Enabled
12	**WRITE preamble setting** 0 = 1^{t}CK toggle[1] 1 = 2^{t}CK toggle (When operating in 2^{t}CK WRITE preamble mode, CWL must be programmed to a value at least 1 clock greater than the lowest CWL setting supported in the applicable ^{t}CK range.)
11	**READ preamble setting** 0 = 1^{t}CK toggle[1] 1 = 2^{t}CK toggle
10	**READ preamble training** 0 = Disabled 1 = Enabled
9	**Self refresh abort mode** 0 = Disabled 1 = Enabled

Micron Technology, Inc. reserves the right to change products or specifications without notice.
© 2018 Micron Technology, Inc. All rights reserved.

Table 18: MR4 Register Definition (Continued)

Mode Register	Description
8:6	**CMD (CAL) address latency** 000 = 0 clocks (disabled) 001 =3 clocks[1] 010 = 4 clocks 011 = 5 clocks[1] 100 = 6 clocks 101 = 8 clocks 110 = Reserved 111 = Reserved
5	**soft Post Package Repair (sPPR mode)** 0 = Disabled 1 = Enabled
4	**Internal V_{REF} monitor** 0 = Disabled 1 = Enabled
3	**Temperature controlled refresh mode** 0 = Disabled 1 = Enabled
2	**Temperature controlled refresh range** 0 = Normal temperature mode 1 = Extended temperature mode
1	**Maximum power savings mode** 0 = Normal operation 1 = Enabled
0	**MBIST-PPR** 0 = Disabled 1 = Enabled

Notes: 1. Not allowed when 1/4 rate gear-down mode is enabled.

Hard Post Package Repair Mode

The hard post package repair (hPPR) mode feature is JEDEC optional for 4Gb DDR4 memories. Performing an MPR read to page 2 MPR0 [7] indicates whether hPPR mode is available (A7 = 1) or not available (A7 = 0). hPPR mode provides a simple and easy repair method of the device after placed in the system. One row per bank can be repaired. The repair process is irrevocable so great care should be exercised when using.

Soft Post Package Repair Mode

The soft post package repair (sPPR) mode feature is JEDEC optional for 4Gb and 8Gb DDR4 memories. Performing an MPR read to page 2 MPR0 [6] indicates whether sPPR mode is available (A6 = 1) or not available (A6 = 0). sPPR mode provides a simple and easy repair method of the device after placed in the system. One row per bank can be repaired. The repair process is revocable by either doing a reset or power-down or by rewriting a new address in the same bank.

Micron Technology, Inc. reserves the right to change products or specifications without notice.
© 2018 Micron Technology, Inc. All rights reserved.

WRITE Preamble

Programmable WRITE preamble, ^{t}WPRE, can be set to 1^{t}CK or 2^{t}CK via the MR4 register. The 1^{t}CK setting is similar to DDR3. However, when operating in 2^{t}CK WRITE preamble mode, CWL must be programmed to a value at least 1 clock greater than the lowest CWL setting supported in the applicable ^{t}CK range.

Some even settings will require addition of 2 clocks. If the alternate longer CWL was used, the additional clocks will not be required.

READ Preamble

Programmable READ preamble ^{t}RPRE can be set to 1^{t}CK or 2^{t}CK via the MR4 register. Both the 1^{t}CK and 2^{t}CK DDR4 preamble settings are different from that defined for the DDR3 SDRAM. Both DDR4 READ preamble settings may require the memory controller to train (or read level) its data strobe receivers using the READ preamble training.

READ Preamble Training

Programmable READ preamble training can be set to 1^{t}CK or 2^{t}CK. This mode can be used by the memory controller to train or READ level its data strobe receivers.

Temperature-Controlled Refresh

When temperature-controlled refresh mode is enabled, the device may adjust the internal refresh period to be longer than ^{t}REFI of the normal temperature range by skipping external REFRESH commands with the proper gear ratio. For example, the DRAM temperature sensor detected less than 45°C. Normal temperature mode covers the range of -40°C to 85°C, while the extended temperature range covers -40°C to 105°C.

Command Address Latency

COMMAND ADDRESS LATENCY (CAL) is a power savings feature and can be enabled or disabled via the MRS setting. CAL is defined as the delay in clock cycles (^{t}CAL) between a CS_n registered LOW and its corresponding registered command and address. The value of CAL (in clocks) must be programmed into the mode register according to the ^{t}CAL(ns)/^{t}CK(ns) rounding algorithms found in the Converting Time-Based Specifications to Clock-Based Requirements section.

Internal V_{REF} Monitor

This mode enables output of internally generated V_{REFDQ} for monitoring on DQ0, DQ1, DQ2, and DQ3. May be used during V_{REFDQ} training and test. While in this mode, R_{TT} should be set to High-Z. V_{REF_time} must be increased by 10ns if DQ load is 0pF, plus an additional 15ns per pF of loading. This measurement is for verification purposes and is NOT an external voltage supply pin.

Maximum Power Savings Mode

This mode provides the lowest power mode where data retention is not required. When the device is in the maximum power saving mode, it does not need to guarantee data retention or respond to any external command (except the MAXIMUM POWER SAVING MODE EXIT command and during the assertion of RESET_n signal LOW).

Micron Technology, Inc. reserves the right to change products or specifications without notice.
© 2018 Micron Technology, Inc. All rights reserved.

MBIST-PPR

This mode is JEDEC optional and allows for a self-contained DRAM test and repair. Please refer to the Features list on page 1 for a list of die revisions that support MBIST-PPR.

Micron Technology, Inc. reserves the right to change products or specifications without notice.
© 2018 Micron Technology, Inc. All rights reserved.

Mode Register 5

Mode register 5 (MR5) controls various device operating modes as shown in the following register definition table. Not all settings listed may be available on a die; only settings required for speed bin support are available. MR5 is written by issuing the MRS command while controlling the states of the BG*x*, BA*x*, and A*x* address pins. The mapping of address pins during the MRS command is shown in the following MR5 Register Definition table.

Table 19: Address Pin Mapping

Address bus	BG 1	BG 0	BA 1	BA 0	A17	RAS_n	CAS_n	WE_n	A13	A12	A11	A10	A9	A8	A7	A6	A5	A4	A3	A2	A1	A0
Mode register	21	20	19	18	17	–	–	–	13	12	11	10	9	8	7	6	5	4	3	2	1	0

Notes: 1. RAS_n, CAS_n, and WE_n must be LOW during MODE REGISTER SET command.

Table 20: MR5 Register Definition

Mode Register	Description
21	**RFU** 0 = Must be programmed to 0 1 = Reserved
20:18	**MR select** 000 = MR0 001 = MR1 010 = MR2 011 = MR3 100 = MR4 **101 = MR5** 110 = MR6 111 = DNU
17	**N/A on 4Gb and 8Gb, RFU** 0 = Must be programmed to 0 1 = Reserved
13	**RFU** 0 = Must be programmed to 0 1 = Reserved
12	**Data bus inversion (DBI) – READ DBI enable** 0 = Disabled 1 = Enabled
11	**Data bus inversion (DBI) – WRITE DBI enable** 0 = Disabled 1 = Enabled
10	**Data mask (DM)** 0 = Disabled 1 = Enabled
9	**CA parity persistent error mode** 0 = Disabled 1 = Enabled

Micron Technology, Inc. reserves the right to change products or specifications without notice.
© 2018 Micron Technology, Inc. All rights reserved.

Table 20: MR5 Register Definition (Continued)

Mode Register	Description
8:6	**Parked ODT value ($R_{TT(Park)}$)** 000 = $R_{TT(Park)}$ disabled 001 = RZQ/4 (60 ohm) 010 = RZQ/2 (120 ohm) 011 = RZQ/6 (40 ohm) 100 = RZQ/1 (240 ohm) 101 = RZQ/5 (48 ohm) 110 = RZQ/3 (80 ohm) 111 = RZQ/7 (34 ohm)
5	**ODT input buffer for power-down** 0 = Buffer enabled 1 = Buffer disabled
4	**CA parity error status** 0 = Clear 1 = Error
3	**CRC error status** 0 = Clear 1 = Error
2:0	**CA parity latency mode** 000 = Disable 001 = 4 clocks (DDR4-1600/1866/2133) 010 = 5 clocks (DDR4-2400/2666)[1] 011 = 6 clocks (DDR4-2933/3200) 100 = Reserved 101 = Reserved 110 = Reserved 111 = Reserved

Notes: 1. Not allowed when 1/4 rate gear-down mode is enabled.

Data Bus Inversion

The DATA BUS INVERSION (DBI) function has been added to the device and is supported only for x8 and x16 configurations (x4 is not supported). The DBI function shares a common pin with the DM and TDQS functions. The DBI function applies to both READ and WRITE operations; Write DBI cannot be enabled at the same time the DM function is enabled. Refer to the TDQS Function Matrix table for valid configurations for all three functions (TDQS/DM/DBI). DBI is not allowed during MPR READ operation; during an MPR read, the DRAM ignores the read DBI enable setting in MR5 bit A12.

DBI is not supported for 3DS devices and should be disabled in MR5.

Data Mask

The DATA MASK (DM) function, also described as a partial write, has been added to the device and is supported only for x8 and x16 configurations (x4 is not supported). The DM function shares a common pin with the DBI and TDQS functions. The DM function applies only to WRITE operations and cannot be enabled at the same time the write DBI function is enabled. Refer to the TDQS Function Matrix table for valid configurations for all three functions (TDQS/DM/DBI).

Micron Technology, Inc. reserves the right to change products or specifications without notice.
© 2018 Micron Technology, Inc. All rights reserved.

CA Parity Persistent Error Mode

Normal CA parity mode (CA parity persistent mode disabled) no longer performs CA parity checking while the parity error status bit remains set at 1. However, with CA parity persistent mode enabled, CA parity checking continues to be performed when the parity error status bit is set to a 1.

ODT Input Buffer for Power-Down

This feature determines whether the ODT input buffer is on or off during power-down. If the input buffer is configured to be on (enabled during power-down), the ODT input signal must be at a valid logic level. If the input buffer is configured to be off (disabled during power-down), the ODT input signal may be floating and the device does not provide $R_{TT(NOM)}$ termination. However, the device may provide $R_{TT(Park)}$ termination depending on the MR settings. This is primarily for additional power savings.

CA Parity Error Status

The device will set the error status bit to 1 upon detecting a parity error. The parity error status bit remains set at 1 until the device controller clears it explicitly using an MRS command.

CRC Error Status

The device will set the error status bit to 1 upon detecting a CRC error. The CRC error status bit remains set at 1 until the device controller clears it explicitly using an MRS command.

CA Parity Latency Mode

CA parity is enabled when a latency value, dependent on ^{t}CK, is programmed; this accounts for parity calculation delay internal to the device. The normal state of CA parity is to be disabled. If CA parity is enabled, the device must ensure there are no parity errors before executing the command. CA parity signal (PAR) covers ACT_n, RAS_n/A16, CAS_n/A15, WE_n/A14, and the address bus including bank address and bank group bits. The control signals CKE, ODT, and CS_n are not included in the parity calculation.

Micron Technology, Inc. reserves the right to change products or specifications without notice.
© 2018 Micron Technology, Inc. All rights reserved.

Mode Register 6

Mode register 6 (MR6) controls various device operating modes as shown in the following register definition table. Not all settings listed may be available on a die; only settings required for speed bin support are available. MR6 is written by issuing the MRS command while controlling the states of the BG*x*, BA*x*, and A*x* address pins. The mapping of address pins during the MRS command is shown in the following MR6 Register Definition table.

Table 21: Address Pin Mapping

Address bus	BG 1	BG 0	BA 1	BA 0	A17	RAS_n	CAS_n	WE_n	A13	A12	A11	A10	A9	A8	A7	A6	A5	A4	A3	A2	A1	A0
Mode register	21	20	19	18	17	–	–	–	13	12	11	10	9	8	7	6	5	4	3	2	1	0

Notes: 1. RAS_n, CAS_n, and WE_n must be LOW during MODE REGISTER SET command.

Table 22: MR6 Register Definition

Mode Register	Description
21	**RFU** 0 = Must be programmed to 0 1 = Reserved
20:18	**MR select** 000 = MR0 001 = MR1 010 = MR2 011 = MR3 100 = MR4 101 = MR5 **110 = MR6** 111 = DNU
17	**NA on 4Gb and 8Gb, RFU** 0 = Must be programmed to 0 1 = Reserved
12:10	**Data rate** 000 = Data rate≤ 1333 Mb/s (1333 Mb/s) 001 = 1333 Mb/s < Data rate ≤ 1866 Mb/s (1600, 1866 Mb/s) 010 = 1866 Mb/s < Data rate ≤ 2400 Mb/s (2133, 2400 Mb/s) 011 = 2400 Mb/s < Data rate ≤ 2666 Mb/s (2666 Mb/s) 100 = 2666 Mb/s < Data rate ≤ 3200 Mb/s (2933, 3200 Mb/s) 101 = Reserved 110 = Reserved 111 = Reserved
13, 9, 8	**RFU** Default = 000; Must be programmed to 000 001 = Reserved 010 = Reserved 011 = Reserved 100 = Reserved 101 = Reserved 110 = Reserved 111 = Reserved

Micron Technology, Inc. reserves the right to change products or specifications without notice.
© 2018 Micron Technology, Inc. All rights reserved.

Table 22: MR6 Register Definition (Continued)

Mode Register	Description
7	**V_{REF} Calibration Enable** 0 = Disable 1 = Enable
6	**V_{REF} Calibration Range** 0 = Range 1 1 = Range 2
5:0	**V_{REF} Calibration Value** See the V_{REFDQ} Range and Levels table in the V_{REFDQ} Calibration section

Data Rate Programming

The device controller must program the correct data rate according to the operating frequency.

V_{REFDQ} Calibration Enable

V_{REFDQ} calibration is where the device internally generates its own V_{REFDQ} to be used by the DQ input receivers. The V_{REFDQ} value will be output on any DQ of DQ[3:0] for evaluation only. The device controller is responsible for setting and calibrating the internal V_{REFDQ} level using an MRS protocol (adjust up, adjust down, and so on). It is assumed that the controller will use a series of writes and reads in conjunction with V_{REFDQ} adjustments to optimize and verify the data eye. Enabling V_{REFDQ} calibration must be used whenever values are being written to the MR6[6:0] register.

V_{REFDQ} Calibration Range

The device defines two V_{REFDQ} calibration ranges: Range 1 and Range 2. Range 1 supports V_{REFDQ} between 60% and 92% of V_{DDQ} while Range 2 supports V_{REFDQ} between 45% and 77% of V_{DDQ}, as seen in V_{REFDQ} Specification table. Although not a restriction, Range 1 was targeted for module-based designs and Range 2 was added to target point-to-point designs.

V_{REFDQ} Calibration Value

Fifty settings provide approximately 0.65% of granularity steps sizes for both Range 1 and Range 2 of V_{REFDQ}, as seen in V_{REFDQ} Range and Levels table in the V_{REFDQ} Calibration section.

Micron Technology, Inc. reserves the right to change products or specifications without notice.
© 2018 Micron Technology, Inc. All rights reserved.

Truth Tables

Table 23: Truth Table – Command

Notes 1–5 apply to the entire table; Note 6 applies to all READ/WRITE commands

Function		Symbol	Prev. CKE	Pres. CKE	CS_n	ACT_n	RAS_n/A16	CAS_n/A15	WE_n/A14	BG[1:0]	BA [1:0]	C[2:0]	A12/BC_n	A[13,11]	A10/AP	A[9:0]	Notes
MODE REGISTER SET		MRS	H	H	L	H	L	L	L	BG	BA	V	OP code				7
REFRESH		REF	H	H	L	H	L	L	H	V	V	V	V	V	V	V	
Self refresh entry		SRE	H	L	L	H	L	L	H	V	V	V	V	V	V	V	8, 9, 10
Self refresh exit		SRX	L	H	H	X	X	X	X	X	X	X	X	X	X	X	8, 9, 10, 11
					L	H	H	H	H	V	V	V	V	V	V	V	
Single-bank PRECHARGE		PRE	H	H	L	H	L	H	L	BG	BA	V	V	V	L	V	
PRECHARGE all banks		PREA	H	H	L	H	L	H	L	V	V	V	V	V	H	V	
Reserved for future use		RFU	H	H	L	H	L	H	H	RFU							
Bank ACTIVATE		ACT	H	H	L	L	Row address (RA)			BG	BA	V	Row address (RA)				
WRITE	BL8 fixed, BC4 fixed	WR	H	H	L	H	H	L	L	BG	BA	V	V	V	L	CA	
	BC4OTF	WRS4	H	H	L	H	H	L	L	BG	BA	V	L	V	L	CA	
	BL8OTF	WRS8	H	H	L	H	H	L	L	BG	BA	V	H	V	L	CA	
WRITE with auto pre-charge	BL8 fixed, BC4 fixed	WRA	H	H	L	H	H	L	L	BG	BA	V	V	V	H	CA	
	BC4OTF	WRAS4	H	H	L	H	H	L	L	BG	BA	V	L	V	H	CA	
	BL8OTF	WRAS8	H	H	L	H	H	L	L	BG	BA	V	H	V	H	CA	
READ	BL8 fixed, BC4 fixed	RD	H	H	L	H	H	L	H	BG	BA	V	V	V	L	CA	
	BC4OTF	RDS4	H	H	L	H	H	L	H	BG	BA	V	L	V	L	CA	
	BL8OTF	RDS8	H	H	L	H	H	L	H	BG	BA	V	H	V	L	CA	

Micron Technology, Inc. reserves the right to change products or specifications without notice.
© 2018 Micron Technology, Inc. All rights reserved.

CCM005-1406124318-10453
16gb_ddr4_dram.pdf - Rev. H 8/2021 EN

Function		Symbol	Prev. CKE	Pres. CKE	CS_n	ACT_n	RAS_n/A16	CAS_n/A15	WE_n/A14	BG[1:0]	BA [1:0]	C[2:0]	A12/BC_n	A[13,11]	A10/AP	A[9:0]	Notes
READ with auto pre-charge	BL8 fixed, BC4 fixed	RDA	H	H	L	H	H	L	H	BG	BA	V	V	V	H	CA	
	BC4OTF	RDAS4	H	H	L	H	H	L	H	BG	BA	V	L	V	H	CA	
	BL8OTF	RDAS8	H	H	L	H	H	L	H	BG	BA	V	H	V	H	CA	
NO OPERATION		NOP	H	H	L	H	H	H	H	V	V	V	V	V	V	V	12
Device DESELECTED		DES	H	H	H	X	X	X	X	X	X	X	X	X	X	X	13
Power-down entry		PDE	H	L	H	X	X	X	X	X	X	X	X	X	X	X	10, 14
Power-down exit		PDX	L	H	H	X	X	X	X	X	X	X	X	X	X	X	10, 14
ZQ CALIBRATION LONG		ZQCL	H	H	L	H	H	H	L	X	X	X	X	X	H	X	
ZQ CALIBRATION SHORT		ZQCS	H	H	L	H	H	H	L	X	X	X	X	X	L	X	

- BG = Bank group address
- BA = Bank address
- RA = Row address
- CA = Column address
- BC_n = Burst chop
- X = "Don't Care"
- V = Valid

2. All DDR4 SDRAM commands are defined by states of CS_n, ACT_n, RAS_n/A16, CAS_n/A15, WE_n/A14, and CKE at the rising edge of the clock. The MSB of BG, BA, RA, and CA are device density- and configuration-dependent. When ACT_n = H, pins RAS_n/A16, CAS_n/A15, and WE_n/A14 are used as command pins RAS_n, CAS_n, and WE_n, respectively. When ACT_n = L, pins RAS_n/A16, CAS_n/A15, and WE_n/A14 are used as address pins A16, A15, and A14, respectively.
3. RESET_n is enabled LOW and is used only for asynchronous reset and must be maintained HIGH during any function.
4. Bank group addresses (BG) and bank addresses (BA) determine which bank within a bank group is being operated upon. For MRS commands, the BG and BA selects the specific mode register location.
5. V means HIGH or LOW (but a defined logic level), and X means either defined or undefined (such as floating) logic level.
6. READ or WRITE bursts cannot be terminated or interrupted, and fixed/on-the-fly (OTF) BL will be defined by MRS.
7. During an MRS command, A17 is RFU and is device density- and configuration-dependent.
8. The state of ODT does not affect the states described in this table. The ODT function is not available during self refresh.
9. V_{PP} and V_{REF} (V_{REFCA}) must be maintained during SELF REFRESH operation.
10. Refer to the Truth Table – CKE table for more details about CKE transition.
11. Controller guarantees self refresh exit to be synchronous. DRAM implementation has the choice of either synchronous or asynchronous.
12. The NO OPERATION (NOP) command may be used only when exiting maximum power saving mode or when entering gear-down mode.

Micron Technology, Inc. reserves the right to change products or specifications without notice.
© 2018 Micron Technology, Inc. All rights reserved.

CCM005-1406124318-10453
16gb_ddr4_dram.pdf - Rev. H 8/2021 EN

13. The NOP command may not be used in place of the DESELECT command.
14. The power-down mode does not perform any REFRESH operation.

Micron Technology, Inc. reserves the right to change products or specifications without notice.
© 2018 Micron Technology, Inc. All rights reserved.

Table 24: Truth Table – CKE

Notes 1–7, 9, and 20 apply to the entire table

Current State	CKE		Command (n)	Action (n)	Notes
	Previous Cycle (n - 1)	Present Cycle (n)			
Power-down	L	L	X	Maintain power-down	8, 10, 11
	L	H	DES	Power-down exit	8, 10, 12
Self refresh	L	L	X	Maintain self refresh	11, 13
	L	H	DES	Self refresh exit	8, 13, 14, 15
Bank(s) active	H	L	DES	Active power-down entry	8, 10, 12, 16
Reading	H	L	DES	Power-down entry	8, 10, 12, 16, 17
Writing	H	L	DES	Power-down entry	8, 10, 12, 16, 17
Precharging	H	L	DES	Power-down entry	8, 10, 12, 16, 17
Refreshing	H	L	DES	Precharge power-down entry	8, 12
All banks idle	H	L	DES	Precharge power-down entry	8, 10, 12, 16, 18
	H	L	REFRESH	Self refresh	16, 18, 19

Notes:
1. Current state is defined as the state of the DDR4 SDRAM immediately prior to clock edge n.
2. CKE (n) is the logic state of CKE at clock edge n; CKE (n-1) was the state of CKE at the previous clock edge.
3. COMMAND (n) is the command registered at clock edge n, and ACTION (n) is a result of COMMAND (n); ODT is not included here.
4. All states and sequences not shown are illegal or reserved unless explicitly described elsewhere in this document.
5. The state of ODT does not affect the states described in this table. The ODT function is not available during self refresh.
6. During any CKE transition (registration of CKE H->L or CKE H->L), the CKE level must be maintained until 1 nCK prior to ^{t}CKE (MIN) being satisfied (at which time CKE may transition again).
7. DESELECT and NOP are defined in the Truth Table – Command table.
8. For power-down entry and exit parameters, see the Power-Down Modes section.
9. CKE LOW is allowed only if ^{t}MRD and ^{t}MOD are satisfied.
10. The power-down mode does not perform any REFRESH operations.
11. X = "Don't Care" (including floating around V_{REF}) in self refresh and power-down. X also applies to address pins.
12. The DESELECT command is the only valid command for power-down entry and exit.
13. V_{PP} and V_{REFCA} must be maintained during SELF REFRESH operation.
14. On self refresh exit, the DESELECT command must be issued on every clock edge occurring during the ^{t}XS period. READ or ODT commands may be issued only after ^{t}XSDLL is satisfied.
15. The DESELECT command is the only valid command for self refresh exit.
16. Self refresh cannot be entered during READ or WRITE operations. For a detailed list of restrictions see the SELF REFRESH Operation and Power-Down Modes sections.
17. If all banks are closed at the conclusion of the READ, WRITE, or PRECHARGE command, then precharge power-down is entered; otherwise, active power-down is entered.

CCM005-1406124318-10453
16gb_ddr4_dram.pdf - Rev. H 8/2021 EN

Micron Technology, Inc. reserves the right to change products or specifications without notice.
© 2018 Micron Technology, Inc. All rights reserved.

18. Idle state is defined as all banks are closed (^{t}RP, ^{t}DAL, and so on, satisfied), no data bursts are in progress, CKE is HIGH, and all timings from previous operations are satisfied (^{t}MRD, ^{t}MOD, ^{t}RFC, ^{t}ZQinit, ^{t}ZQoper, ^{t}ZQCS, and so on), as well as all self refresh exit and power-down exit parameters are satisfied (^{t}XS, ^{t}XP, ^{t}XSDLL, and so on).
19. Self refresh mode can be entered only from the all banks idle state.
20. For more details about all signals, see the Truth Table – Command table; must be a legal command as defined in the table.

Micron Technology, Inc. reserves the right to change products or specifications without notice.
© 2018 Micron Technology, Inc. All rights reserved.

NOP Command

The NO OPERATION (NOP) command was originally used to instruct the selected DDR4 SDRAM to perform a NOP (CS_n = LOW and ACT_n, RAS_n/A16, CAS_n/A15, and WE_n/A14 = HIGH). This prevented unwanted commands from being registered during idle or wait states. NOP command general support has been removed and the command should not be used unless specifically allowed, which is when exiting maximum power-saving mode or when entering gear-down mode.

DESELECT Command

The deselect function (CS_n HIGH) prevents new commands from being executed; therefore, with this command, the device is effectively deselected. Operations already in progress are not affected.

DLL-Off Mode

DLL-off mode is entered by setting MR1 bit A0 to 0, which will disable the DLL for subsequent operations until the A0 bit is set back to 1. The MR1 A0 bit for DLL control can be switched either during initialization or during self refresh mode. Refer to the Input Clock Frequency Change section for more details.

The maximum clock frequency for DLL-off mode is specified by the parameter ^{t}CKDLL_OFF.

Due to latency counter and timing restrictions, only one CL value and CWL value (in MR0 and MR2 respectively) are supported. The DLL-off mode is only required to support setting both CL = 10 and CWL = 9.

DLL-off mode will affect the read data clock-to-data strobe relationship (^{t}DQSCK), but not the data strobe-to-data relationship (^{t}DQSQ,^{t}QH). Special attention is needed to line up read data to the controller time domain.

Compared with DLL-on mode, where ^{t}DQSCK starts from the rising clock edge (AL + CL) cycles after the READ command, the DLL-off mode ^{t}DQSCK starts (AL + CL - 1) cycles after the READ command. Another difference is that ^{t}DQSCK may not be small compared to^{t}CK (it might even be larger than ^{t}CK), and the difference between ^{t}DQSCK (MIN) and ^{t}DQSCK (MAX) is significantly larger than in DLL-on mode. The ^{t}DQSCK (DLL-off) values are undefined and the user is responsible for training to the data-eye.

The timing relations on DLL-off mode READ operation are shown in the following diagram, where CL = 10, AL = 0, and BL = 8.

Micron Technology, Inc. reserves the right to change products or specifications without notice.
© 2018 Micron Technology, Inc. All rights reserved.

Figure 18: DLL-Off Mode Read Timing Operation

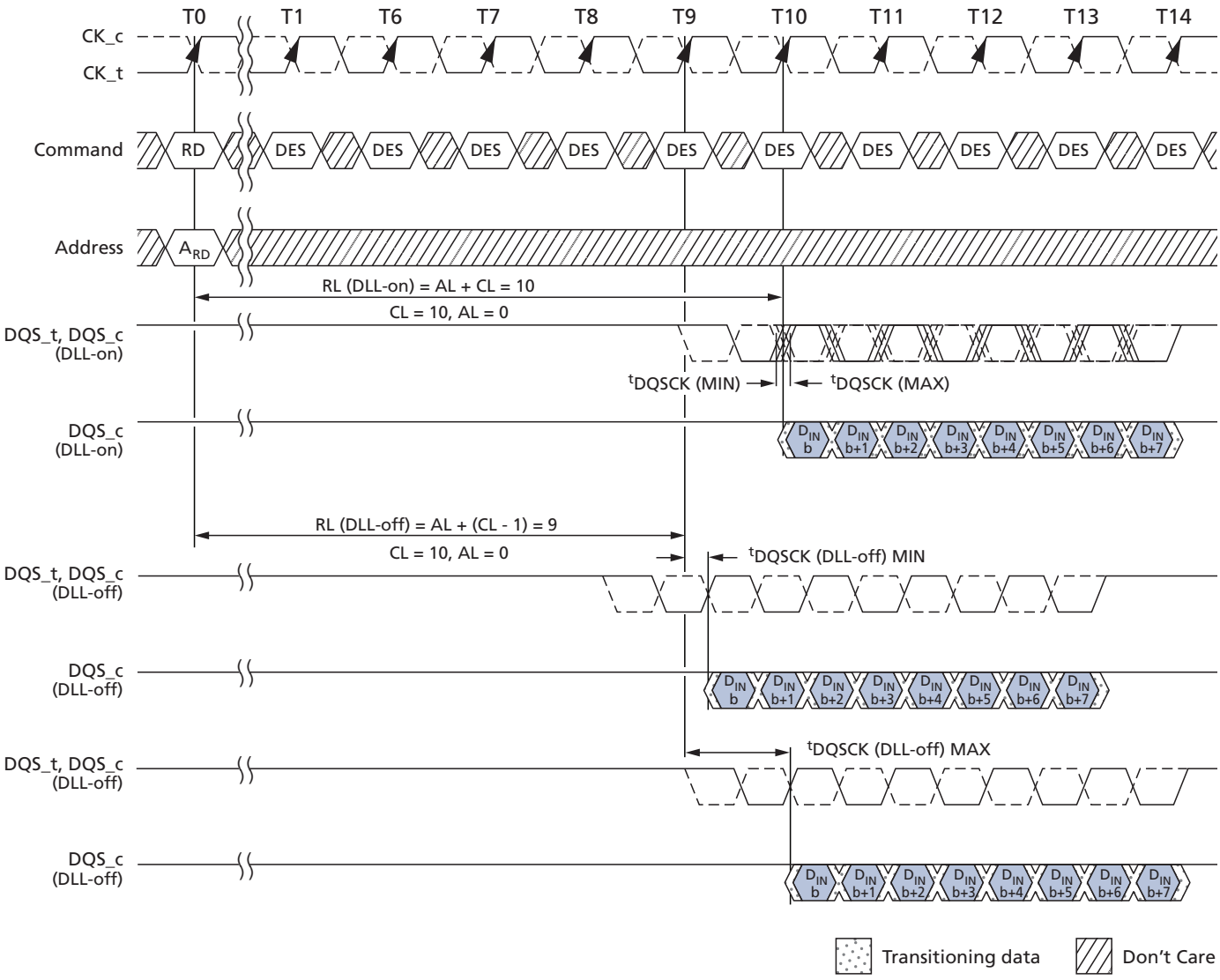

Micron Technology, Inc. reserves the right to change products or specifications without notice.
© 2018 Micron Technology, Inc. All rights reserved.

DLL-On/Off Switching Procedures

The DLL-off mode is entered by setting MR1 bit A0 to 0; this will disable the DLL for subsequent operations until the A0 bit is set back to 1.

DLL Switch Sequence from DLL-On to DLL-Off

To switch from DLL-on to DLL-off requires the frequency to be changed during self refresh, as outlined in the following procedure:

1. Starting from the idle state (all banks pre-charged, all timings fulfilled, and, to disable the DLL, the DRAM on-die termination resistors, $R_{TT(NOM)}$, must be in High-Z before MRS to MR1.)
2. Set MR1 bit A0 to 1 to disable the DLL.
3. Wait ^{t}MOD.
4. Enter self refresh mode; wait until ^{t}CKSRE/^{t}CKSRE_PAR is satisfied.
5. Change frequency, following the guidelines in the Input Clock Frequency Change section.
6. Wait until a stable clock is available for at least ^{t}CKSRX at device inputs.
7. Starting with the SELF REFRESH EXIT command, CKE must continuously be registered HIGH until all ^{t}MOD timings from any MRS command are satisfied. In addition, if any ODT features were enabled in the mode registers when self refresh mode was entered, the ODT signal must continuously be registered LOW until all ^{t}MOD timings from any MRS command are satisfied. If $R_{TT(NOM)}$ was disabled in the mode registers when self refresh mode was entered, the ODT signal is "Don't Care."
8. Wait ^{t}XS_FAST, ^{t}XS_ABORT, or ^{t}XS, and then set mode registers with appropriate values (an update of CL, CWL, and WR may be necessary; a ZQCL command can also be issued after ^{t}XS_FAST).
   - ^{t}XS_FAST: ZQCL, ZQCS, and MRS commands. For MRS commands, only CL and WR/RTP registers in MR0, the CWL register in MR2, and gear-down mode in MR3 may be accessed provided the device is not in per-DRAM addressability mode. Access to other device mode registers must satisfy ^{t}XS timing.
   - ^{t}XS_ABORT: If MR4 [9] is enabled, then the device aborts any ongoing refresh and does not increment the refresh counter. The controller can issue a valid command after a delay of ^{t}XS_ABORT. Upon exiting from self refresh, the device requires a minimum of one extra REFRESH command before it is put back into self refresh mode. This requirement remains the same regardless of the MRS bit setting for self refresh abort.
   - ^{t}XS: ACT, PRE, PREA, REF, SRE, PDE, WR, WRS4, WRS8, WRA, WRAS4, WRAS8, RD, RDS4, RDS8, RDA, RDAS4, and RDAS8.
9. Wait ^{t}MOD to complete.

The device is ready for the next command.

Micron Technology, Inc. reserves the right to change products or specifications without notice.
© 2018 Micron Technology, Inc. All rights reserved.

Figure 19: DLL Switch Sequence from DLL-On to DLL-Off

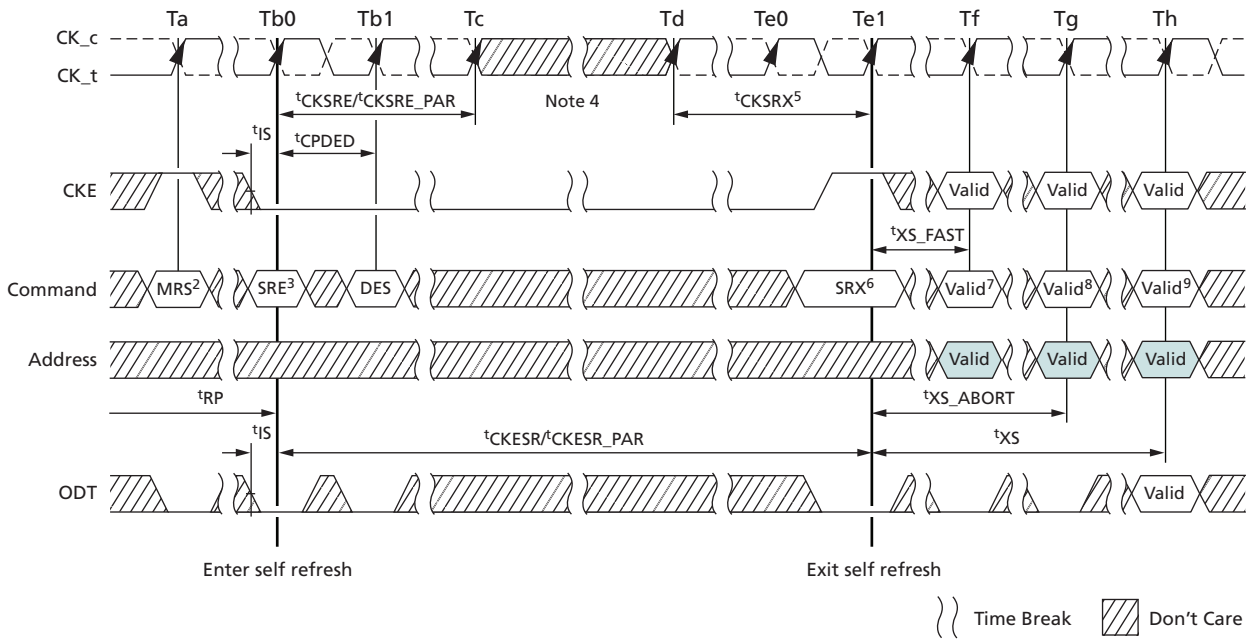

Notes: 1. Starting in the idle state. R_{TT} in stable state.
2. Disable DLL by setting MR1 bit A0 to 0.
3. Enter SR.
4. Change frequency.
5. Clock must be stable ^{t}CKSRX.
6. Exit SR.
7. Update mode registers allowed with DLL-off settings met.

Micron Technology, Inc. reserves the right to change products or specifications without notice.
© 2018 Micron Technology, Inc. All rights reserved.

DLL-Off to DLL-On Procedure

To switch from DLL-off to DLL-on (with required frequency change) during self refresh:

1. Starting from the idle state (all banks pre-charged, all timings fulfilled, and DRAM ODT resistors ($R_{TT(NOM)}$) must be in High-Z before self refresh mode is entered.)
2. Enter self refresh mode; wait until ^{t}CKSRE/^{t}CKSRE_PAR are satisfied.
3. Change frequency (following the guidelines in the Input Clock Frequency Change section).
4. Wait until a stable clock is available for at least ^{t}CKSRX at device inputs.
5. Starting with the SELF REFRESH EXIT command, CKE must continuously be registered HIGH until ^{t}DLLK timing from the subsequent DLL RESET command is satisfied. In addition, if any ODT features were enabled in the mode registers when self refresh mode was entered, the ODT signal must continuously be registered LOW or HIGH until ^{t}DLLK timing from the subsequent DLL RESET command is satisfied. If $R_{TT(NOM)}$ disabled in the mode registers when self refresh mode was entered, the ODT signal is "Don't Care."
6. Wait ^{t}XS or ^{t}XS_ABORT, depending on bit 9 in MR4, then set MR1 bit A0 to 0 to enable the DLL.
7. Wait ^{t}MRD, then set MR0 bit A8 to 1 to start DLL reset.
8. Wait ^{t}MRD, then set mode registers with appropriate values; an update of CL, CWL, and WR may be necessary. After ^{t}MOD is satisfied from any proceeding MRS command, a ZQCL command can also be issued during or after ^{t}DLLK.
9. Wait for ^{t}MOD to complete. Remember to wait ^{t}DLLK after DLL RESET before applying any command requiring a locked DLL. In addition, wait for ^{t}ZQoper in case a ZQCL command was issued.

The device is ready for the next command.

Figure 20: DLL Switch Sequence from DLL-Off to DLL-On

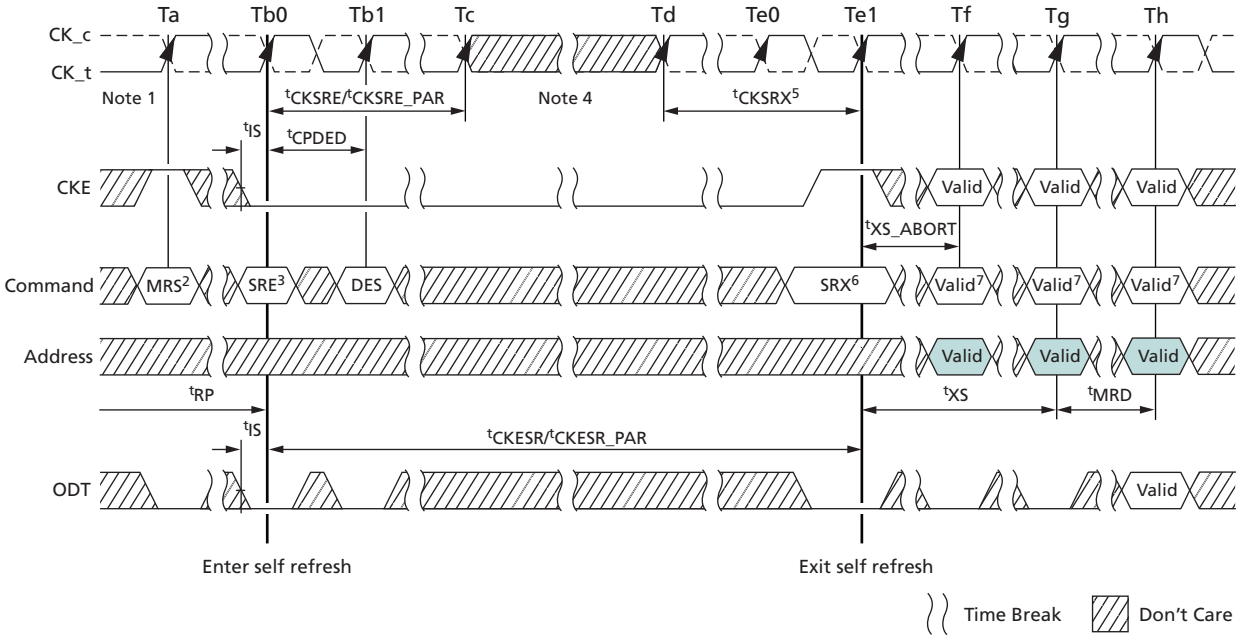

Notes: 1. Starting in the idle state.
2. Enter SR.
3. Change frequency.

Micron Technology, Inc. reserves the right to change products or specifications without notice.
© 2018 Micron Technology, Inc. All rights reserved.

4. Clock must be stable ^{t}CKSRX.
5. Exit SR.
6. Set DLL to on by setting MR1 to A0 = 0.
7. Update mode registers.
8. Issue any valid command.

Input Clock Frequency Change

After the device is initialized, it requires the clock to be stable during almost all states of normal operation. This means that after the clock frequency has been set and is in the stable state, the clock period is not allowed to deviate except for what is allowed by the clock jitter and spread spectrum clocking (SSC) specifications. The input clock frequency can be changed from one stable clock rate to another stable clock rate only when in self refresh mode. Outside of self refresh mode, it is illegal to change the clock frequency.

After the device has been successfully placed in self refresh mode and ^{t}CKSRE/^{t}CKSRE_PAR have been satisfied, the state of the clock becomes a "Don't Care." Following a "Don't Care," changing the clock frequency is permissible, provided the new clock frequency is stable prior to ^{t}CKSRX. When entering and exiting self refresh mode for the sole purpose of changing the clock frequency, the self refresh entry and exit specifications must still be met as outlined in SELF REFRESH Operation.

For the new clock frequency, additional MRS commands to MR0, MR2, MR3, MR4, MR5, and MR6 may need to be issued to program appropriate CL, CWL, gear-down mode, READ and WRITE preamble, Command Address Latency, and data rate values.

When the clock rate is being increased (faster), the MR settings that require additional clocks should be updated prior to the clock rate being increased. In particular, the PL latency must be disabled when the clock rate changes, ie. while in self refresh mode. For example, if changing the clock rate from DDR4-2133 to DDR4-2933 with CA parity mode enabled, MR5[2:0] must first change from PL = 4 to PL = disable prior to PL = 6. The correct procedure would be to (1) change PL = 4 to disable via MR5 [2:0], (2) enter self refresh mode, (3) change clock rate from DDR4-2133 to DDR4-2933, (4) exit self refresh mode, (5) Enable CA parity mode setting PL = 6 vis MR5 [2:0].

If the MR settings that require additional clocks are updated after the clock rate has been increased, for example. after exiting self refresh mode, the required MR settings must be updated prior to removing the DRAM from the IDLE state, unless the DRAM is RESET. If the DRAM leaves the IDLE state to enter self refresh mode or ZQ Calibration, the updating of the required MR settings may be deferred to the next time the DRAM enters the IDLE state.

If MR6 is issued prior to self refresh entry for the new data rate value, DLL will relock automatically at self refresh exit. However, if MR6 is issued after self refresh entry, MR0 must be issued to reset the DLL.

The device input clock frequency can change only within the minimum and maximum operating frequency specified for the particular speed grade. Any frequency change below the minimum operating frequency would require the use of DLL-on mode to DLL-off mode transition sequence (see DLL-On/Off Switching Procedures).

Write Leveling

For better signal integrity, DDR4 memory modules use fly-by topology for the commands, addresses, control signals, and clocks. Fly-by topology has benefits from the reduced number of stubs and their length, but it also causes flight-time skew between clock and strobe at every DRAM on the DIMM. This makes it difficult for the controller to maintain ^{t}DQSS,^{t}DSS, and ^{t}DSH specifications. Therefore, the device supports a write leveling feature to allow the controller to compensate for skew. This feature

Micron Technology, Inc. reserves the right to change products or specifications without notice.
© 2018 Micron Technology, Inc. All rights reserved.

may not be required under some system conditions, provided the host can maintain the ^{t}DQSS, ^{t}DSS, and ^{t}DSH specifications.

The memory controller can use the write leveling feature and feedback from the device to adjust the DQS (DQS_t, DQS_c) to CK (CK_t, CK_c) relationship. The memory controller involved in the leveling must have an adjustable delay setting on DQS to align the rising edge of DQS with that of the clock at the DRAM pin. The DRAM asynchronously feeds back CK, sampled with the rising edge of DQS, through the DQ bus. The controller repeatedly delays DQS until a transition from 0 to 1 is detected. The DQS delay established though this exercise would ensure the ^{t}DQSS specification. Besides ^{t}DQSS, ^{t}DSS and ^{t}DSH specifications also need to be fulfilled. One way to achieve this is to combine the actual ^{t}DQSS in the application with an appropriate duty cycle and jitter on the DQS signals. Depending on the actual ^{t}DQSS in the application, the actual values for ^{t}DQSL and ^{t}DQSH may have to be better than the absolute limits provided in the AC Timing Parameters section in order to satisfy ^{t}DSS and ^{t}DSH specifications. A conceptual timing of this scheme is shown below.

Figure 21: Write Leveling Concept, Example 1

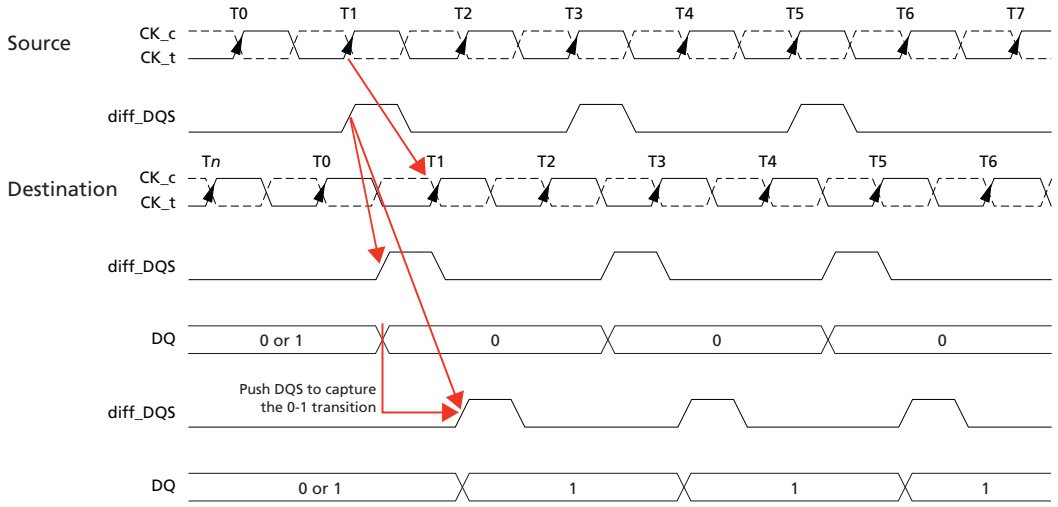

DQS driven by the controller during leveling mode must be terminated by the DRAM based on the ranks populated. Similarly, the DQ bus driven by the DRAM must also be terminated at the controller.

All data bits carry the leveling feedback to the controller across the DRAM configurations: x4, x8, and x16. On a x16 device, both byte lanes should be leveled independently. Therefore, a separate feedback mechanism should be available for each byte lane. The upper data bits should provide the feedback of the upper diff_DQS(diff_UDQS)-to-clock relationship; the lower data bits would indicate the lower diff_DQS(diff_LDQS)-to-clock relationship.

The figure below is another representative way to view the write leveling procedure. Although it shows the clock varying to a static strobe, this is for illustrative purpose only; the clock does not actually change phase, the strobe is what actually varies. By issuing multiple WL bursts, the DQS strobe can be varied to capture with fair accuracy the time at which the clock edge arrives at the DRAM clock input buffer.

Micron Technology, Inc. reserves the right to change products or specifications without notice.
© 2018 Micron Technology, Inc. All rights reserved.

Figure 22: Write Leveling Concept, Example 2

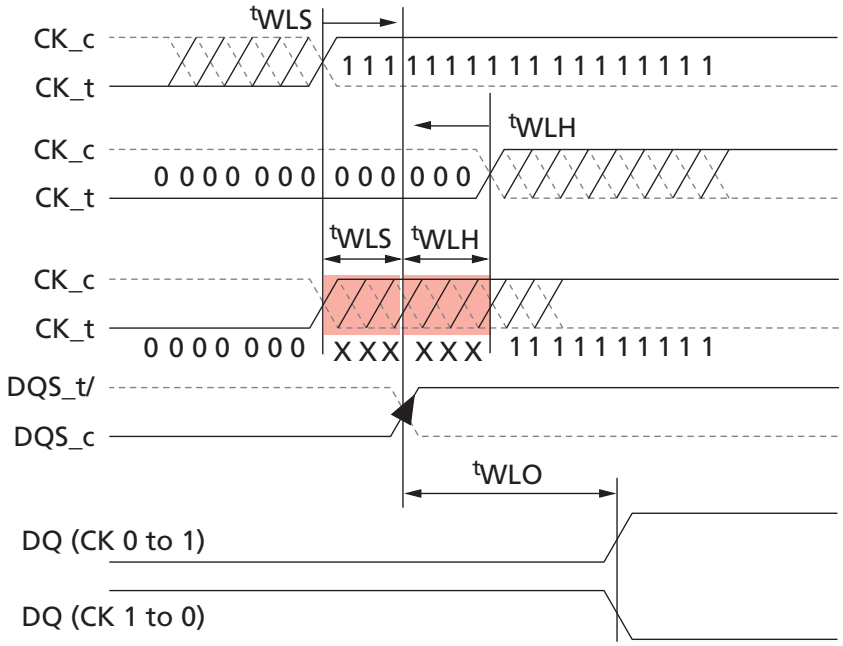

DRAM Setting for Write Leveling and DRAM TERMINATION Function in that Mode

The DRAM enters into write leveling mode if A7 in MR1 is HIGH. When leveling is finished, the DRAM exits write leveling mode if A7 in MR1 is LOW (see the MR Leveling Procedures table). Note that in write leveling mode, only DQS terminations are activated and deactivated via the ODT pin, unlike normal operation (see DRAM DRAM TERMINATION Function in Leveling Mode table).

Table 25: MR Settings for Leveling Procedures

Function	MR1	Enable	Disable
Write leveling enable	A7	1	0
Output buffer mode (Q off)	A12	0	1

Table 26: DRAM TERMINATION Function in Leveling Mode

ODT Pin at DRAM	DQS_t/DQS_c Termination	DQ Termination
$R_{TT(NOM)}$ with ODT HIGH	On	Off
$R_{TT(Park)}$ with ODT LOW	On	Off

Notes: 1. In write leveling mode, with the mode's output buffer either disabled (MR1[bit7] = 1 and MR1[bit12] = 1) or with its output buffer enabled (MR1[bit7] = 1 and MR1[bit12] = 0), all $R_{TT(NOM)}$ and $R_{TT(Park)}$ settings are supported.
2. $R_{TT(WR)}$ is not allowed in write leveling mode and must be set to disable prior to entering write leveling mode.

Procedure Description

The memory controller initiates the leveling mode of all DRAM by setting bit 7 of MR1 to 1. When entering write leveling mode, the DQ pins are in undefined driving mode. During write leveling mode, only the DESELECT command is supported, other than MRS commands to change the Qoff bit (MR1[A12]) and to exit write leveling (MR1[A7]). Upon exiting write leveling mode, the MRS command performing the exit (MR1[A7] = 0) may also change the other MR1 bits. Because the controller levels

Micron Technology, Inc. reserves the right to change products or specifications without notice.
© 2018 Micron Technology, Inc. All rights reserved.

one rank at a time, the output of other ranks must be disabled by setting MR1 bit A12 to 1. The controller may assert ODT after ^{t}MOD, at which time the DRAM is ready to accept the ODT signal, unless DODTLon or DODTLoff have been altered (the ODT internal pipe delay is increased when increasing WRITE latency [WL] or READ latency [RL] by the previous MR command), then ODT assertion should be delayed by DODTLon after ^{t}MOD is satisfied, which means the delay is now ^{t}MOD + DODTLon.

The controller may drive DQS_t LOW and DQS_c HIGH after a delay of ^{t}WLDQSEN, at which time the DRAM has applied ODT to these signals. After ^{t}DQSL and ^{t}WLMRD, the controller provides a single DQS_t, DQS_c edge, which is used by the DRAM to sample CK driven from the controller. ^{t}WLMRD (MAX) timing is controller dependent.

The DRAM samples CK status with the rising edge of DQS and provides feedback on all the DQ bits asynchronously after ^{t}WLO timing. There is a DQ output uncertainty of ^{t}WLOE defined to allow mismatch on DQ bits. The ^{t}WLOE period is defined from the transition of the earliest DQ bit to the corresponding transition of the latest DQ bit. There are no read strobes (DQS_t, DQS_c) needed for these DQs. The controller samples incoming DQ and either increments or decrements DQS delay setting and launches the next DQS pulse after some time, which is controller dependent. After a 0-to-1 transition is detected, the controller locks the DQS delay setting, and write leveling is achieved for the device. The following figure shows the timing diagram and parameters for the overall write leveling procedure.

Figure 23: Write Leveling Sequence (DQS Capturing CK LOW at T1 and CK HIGH at T2)

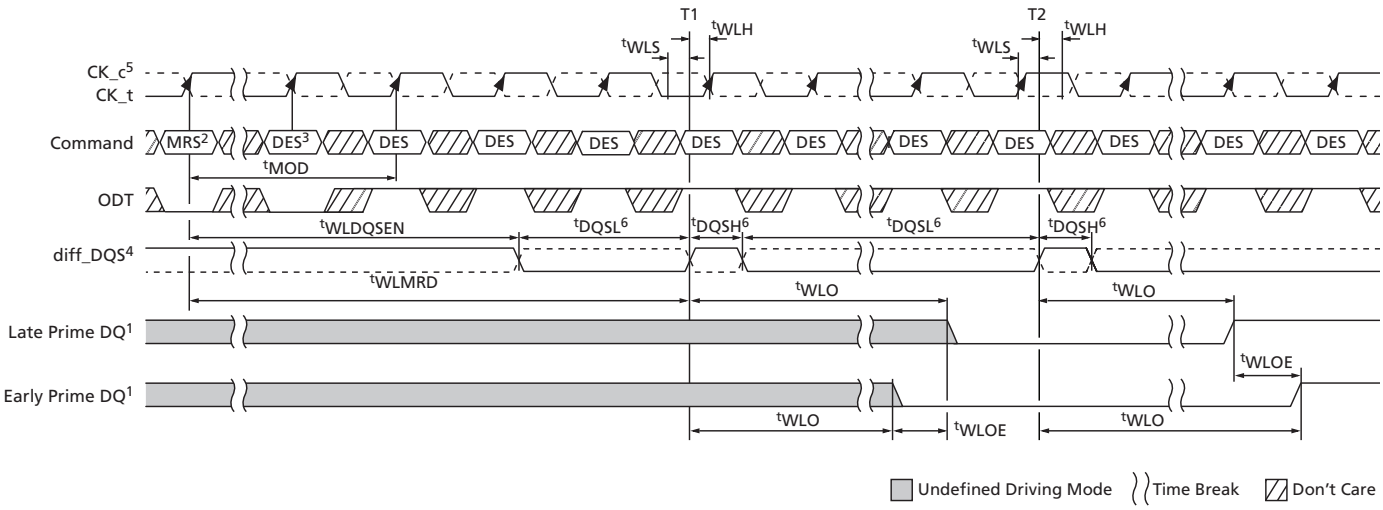

Notes: 1. The device drives leveling feedback on all DQs.
2. MRS: Load MR1 to enter write leveling mode.
3. diff_DQS is the differential data strobe. Timing reference points are the zero crossings. DQS_t is shown with a solid line; DQS_c is shown with a dotted line.
4. CK_t is shown with a solid dark line; CK_c is shown with a dotted line.
5. DQS needs to fulfill minimum pulse width requirements, ^{t}DQSH (MIN) and ^{t}DQSL (MIN), as defined for regular WRITEs; the maximum pulse width is system dependent.
6. ^{t}WLDQSEN must be satisfied following equation when using ODT:
   - DLL = Enable, then ^{t}WLDQSEN > ^{t}MOD (MIN) + DODTLon + ^{t}ADC
   - DLL = Disable, then ^{t}WLDQSEN > ^{t}MOD (MIN) + ^{t}AONAS

Micron Technology, Inc. reserves the right to change products or specifications without notice.
© 2018 Micron Technology, Inc. All rights reserved.

Write Leveling Mode Exit

Write leveling mode should be exited as follows:

1. After the last rising strobe edge (see ~T0), stop driving the strobe signals (see ~Tc0). Note that from this point on, DQ pins are in undefined driving mode and will remain undefined, until ^{t}MOD after the respective MR command (Te1).
2. Drive ODT pin LOW (^{t}IS must be satisfied) and continue registering LOW (see Tb0).
3. After R_{TT} is switched off, disable write leveling mode via the MRS command (see Tc2).
4. After ^{t}MOD is satisfied (Te1), any valid command can be registered. (MR commands can be issued after ^{t}MRD [Td1]).

Figure 24: Write Leveling Exit

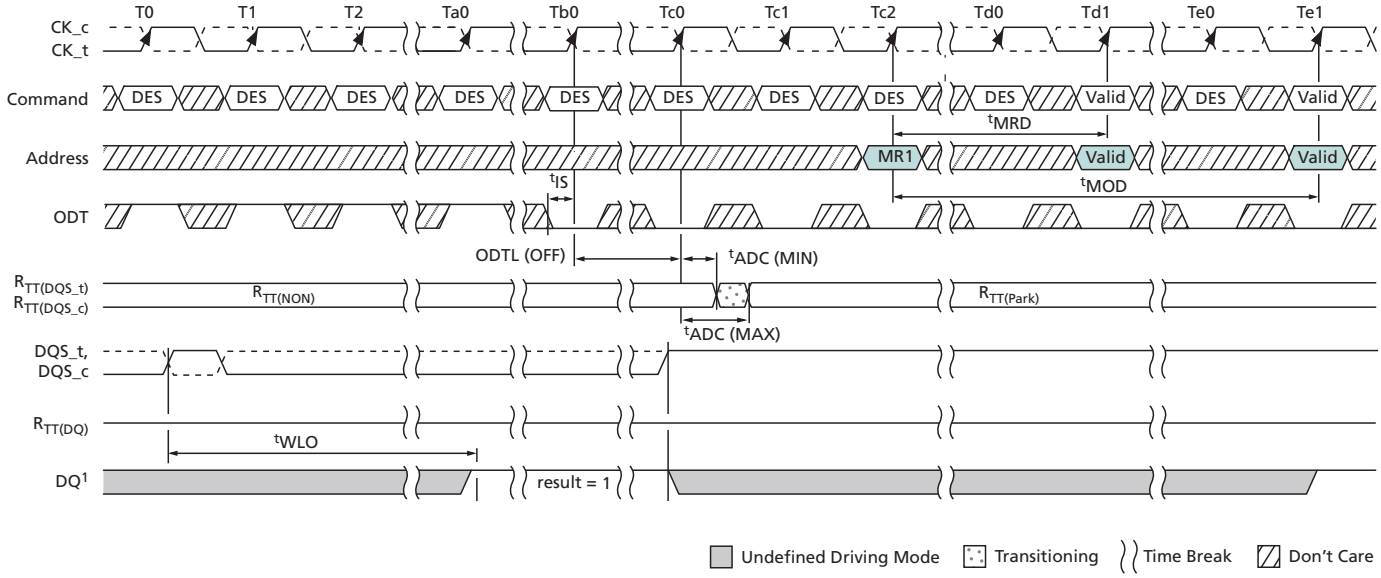

Notes: 1. The DQ result = 1 between Ta0 and Tc0 is a result of the DQS signals capturing CK_t HIGH just after the T0 state.
2. See previous figure for specific ^{t}WLO timing.

Micron Technology, Inc. reserves the right to change products or specifications without notice.
© 2018 Micron Technology, Inc. All rights reserved.

Command Address Latency

DDR4 supports the command address latency (CAL) function as a power savings feature. This feature can be enabled or disabled via the MRS setting. CAL timing is defined as the delay in clock cycles (^{t}CAL) between a CS_n registered LOW and its corresponding registered command and address. The value of CAL in clocks must be programmed into the mode register (see MR1 Register Definition table) and is based on the ^{t}CAL(ns)/^{t}CK(ns) rounding algorithms found in the Converting Time-Based Specifications to Clock-Based Requirements section.

Figure 25: CAL Timing Definition

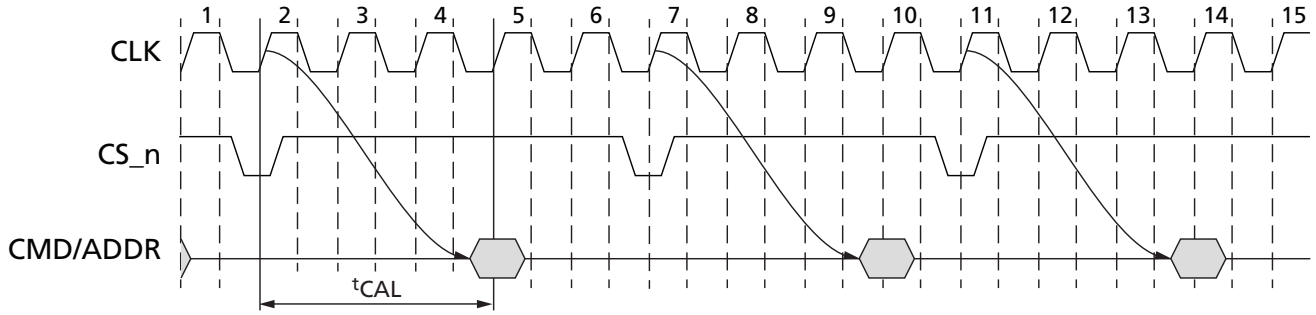

CAL gives the DRAM time to enable the command and address receivers before a command is issued. After the command and the address are latched, the receivers can be disabled if CS_n returns to HIGH. For consecutive commands, the DRAM will keep the command and address input receivers enabled for the duration of the command sequence.

Figure 26: CAL Timing Example (Consecutive CS_n = LOW)

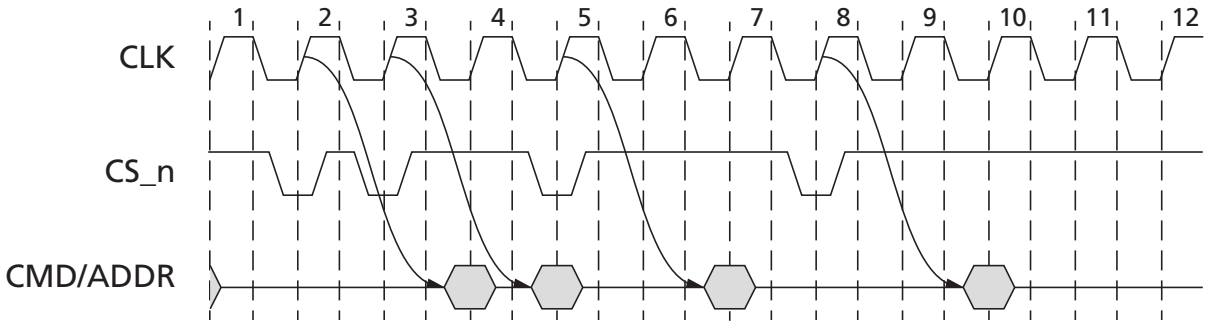

When the CAL mode is enabled, additional time is required for the MRS command to complete. The earliest the next valid command can be issued is ^{t}MOD_CAL, which should be equal to ^{t}MOD + ^{t}CAL. The two following figures are examples.

Micron Technology, Inc. reserves the right to change products or specifications without notice.
© 2018 Micron Technology, Inc. All rights reserved.

Figure 27: CAL Enable Timing – ^{t}MOD_CAL

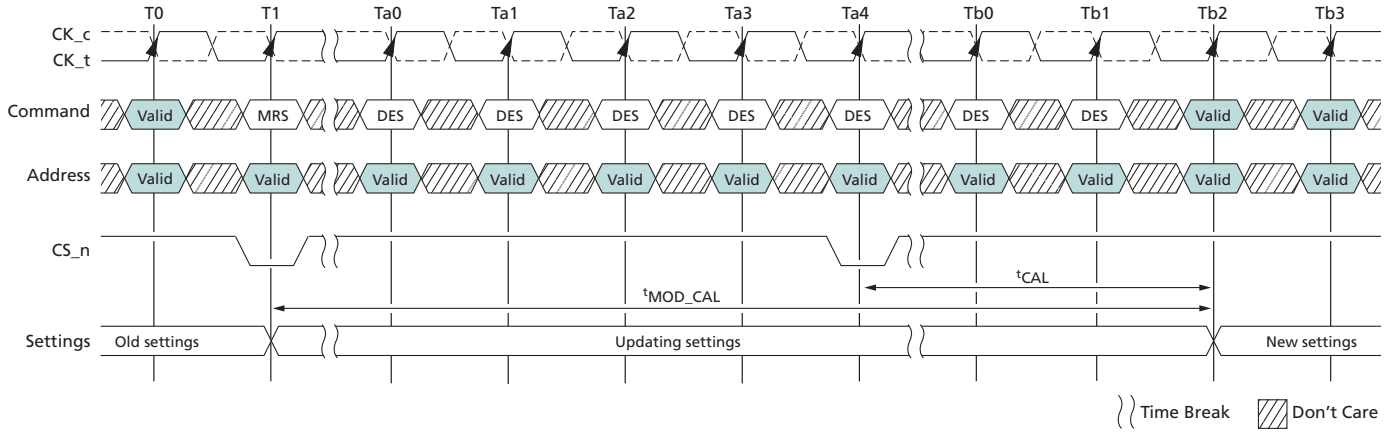

Note: 1. CAL mode is enabled at T1.

Figure 28: ^{t}MOD_CAL, MRS to Valid Command Timing with CAL Enabled

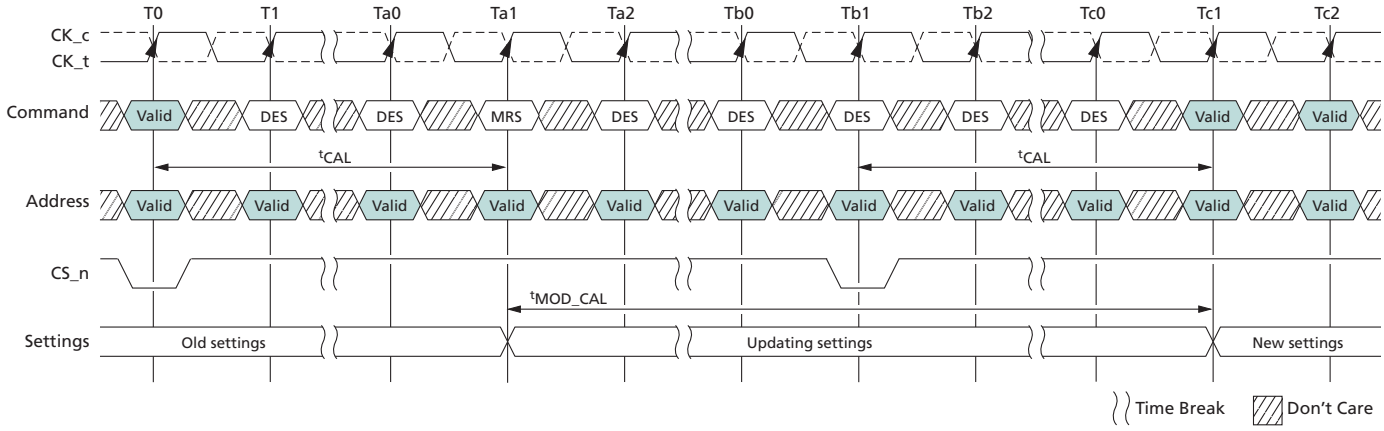

Note: 1. MRS at Ta1 may or may not modify CAL, ^{t}MOD_CAL is computed based on new ^{t}CAL setting if modified.

When the CAL mode is enabled or being enabled, the earliest the next MRS command can be issued is ^{t}MRD_CAL is equal to ^{t}MOD + ^{t}CAL. The two following figures are examples.

Figure 29: CAL Enabling MRS to Next MRS Command, ^{t}MRD_CAL

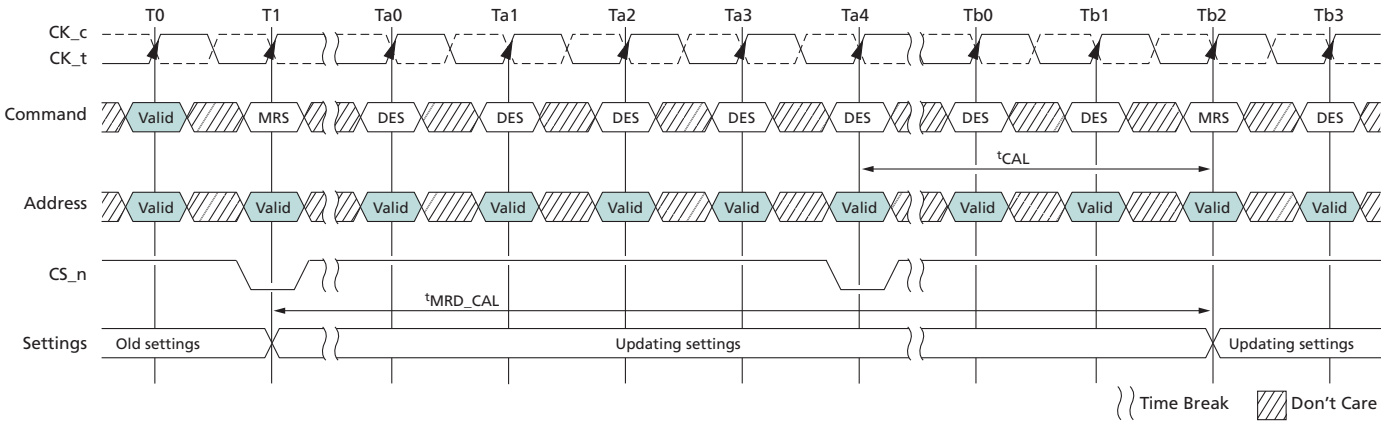

Micron Technology, Inc. reserves the right to change products or specifications without notice.
© 2018 Micron Technology, Inc. All rights reserved.

Note: 1. Command address latency mode is enabled at T1.

Figure 30: ^{t}MRD_CAL, Mode Register Cycle Time With CAL Enabled

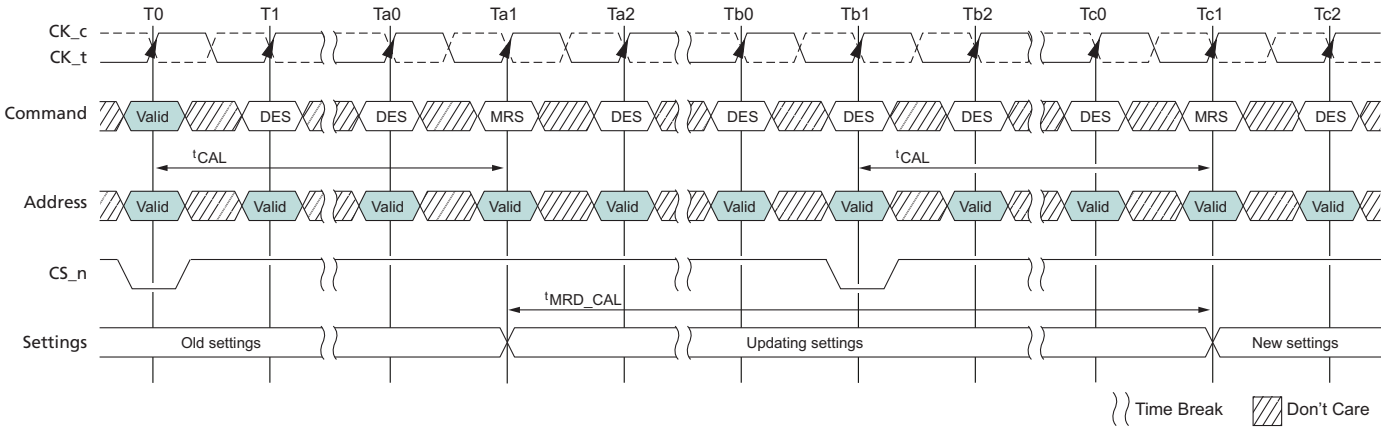

Note: 1. MRS at Ta1 may or may not modify CAL, ^{t}MRD_CAL is computed based on new ^{t}CAL setting if modified.

CAL Examples: Consecutive READ BL8 with two different CALs and 1^{t}CK preamble in different bank group shown in the following figures.

Micron Technology, Inc. reserves the right to change products or specifications without notice.
© 2018 Micron Technology, Inc. All rights reserved.

Figure 31: Consecutive READ BL8, CAL3, 1tCK Preamble, Different Bank Group

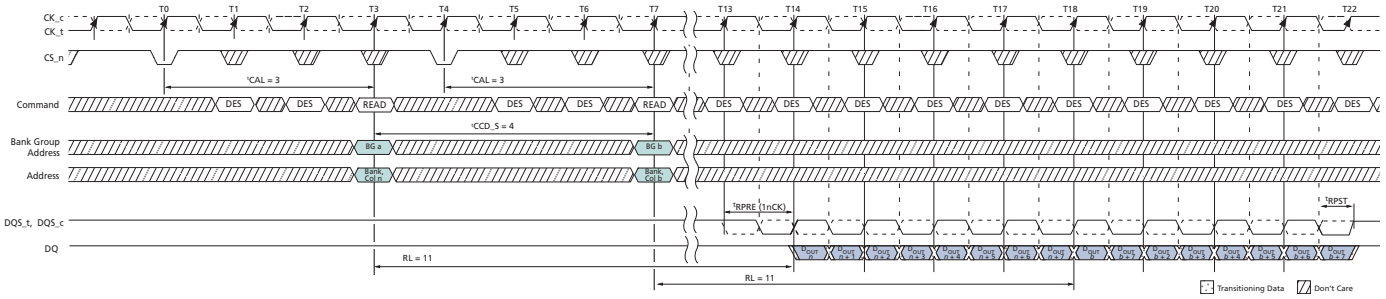

Notes: 1. BL = 8, AL = 0, CL = 11, CAL = 3, Preamble = 1tCK.
2. D_{OUT} n = data-out from column n; D_{OUT} b = data-out from column b.
3. DES commands are shown for ease of illustration, other commands may be valid at these times.
4. BL8 setting activated by either MR0[A1:0 = 00] or MR0[A1:0 = 01] and A12 = 1 during READ command at T3 and T7.
5. CA parity = Disable, CS to CA latency = Enable, Read DBI = Disable.
6. Enabling CAL mode does not impact ODT control timings. ODT control timings should be maintained with the same timing relationship relative to the command/address bus as when CAL is disabled.

Figure 32: Consecutive READ BL8, CAL4, 1tCK Preamble, Different Bank Group

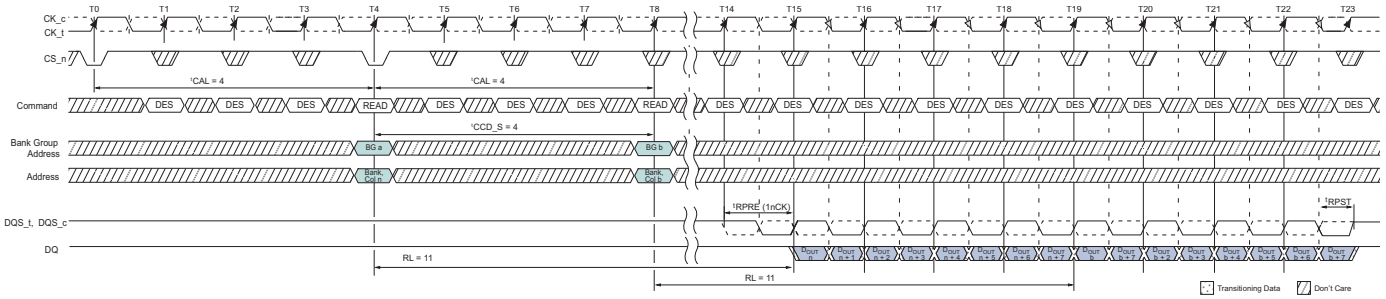

Notes: 1. BL = 8, AL = 0, CL = 11, CAL = 4, Preamble = 1tCK.
2. D_{OUT} n = data-out from column n; D_{OUT} b = data-out from column b.
3. DES commands are shown for ease of illustration, other commands may be valid at these times.
4. BL8 setting activated by either MR0[A1:0 = 00] or MR0[A1:0 = 01] and A12 = 1 during READ command at T4 and T8.
5. CA parity = Disable, CS to CA latency = Enable, Read DBI = Disable.
6. Enabling CAL mode does not impact ODT control timings. ODT control timings should be maintained with the same timing relationship relative to the command/address bus as when CAL is disabled.

CCM005-1406124318-10453
16gb_ddr4_dram.pdf - Rev. H 8/2021 EN
Micron Technology, Inc. reserves the right to change products or specifications without notice.
© 2018 Micron Technology, Inc. All rights reserved.

Low-Power Auto Self Refresh Mode

An auto self refresh mode is provided for application ease. Auto self refresh mode is enabled by setting MR2[6] = 1 and MR2[7] = 1. The device will manage self refresh entry over the supported temperature range of the DRAM. In this mode, the device will change its self refresh rate as the DRAM operating temperature changes, going lower at low temperatures and higher at high temperatures.

Manual Self Refresh Mode

If auto self refresh mode is not enabled, the low-power auto self refresh mode register must be manually programmed to one of the three self refresh operating modes. This mode provides the flexibility to select a fixed self refresh operating mode at the entry of the self refresh, according to the system memory temperature conditions. The user is responsible for maintaining the required memory temperature condition for the mode selected during the SELF REFRESH operation. The user may change the selected mode after exiting self refresh and before entering the next self refresh. If the temperature condition is exceeded for the mode selected, there is a risk to data retention resulting in loss of data.

Table 27: Auto Self Refresh Mode

MR2[7]	MR2[6]	Low-Power Auto Self Refresh Mode	SELF REFRESH Operation	Operating Temperature Range for Self Refresh Mode (DRAM T_{CASE})
0	0	Normal	Variable or fixed normal self refresh rate maintains data retention at the normal operating temperature. User is required to ensure that 85°C DRAM T_{CASE} (MAX) is not exceeded to avoid any risk of data loss.	-40°C to 85°C
1	0	Extended temperature	Variable or fixed high self refresh rate optimizes data retention to support the extended temperature range.	-40°C to 105°C
0	1	Reduced temperature	Variable or fixed self refresh rate or any other DRAM power consumption reduction control for the reduced temperature range. User is required to ensure 45°C DRAM T_{CASE} (MAX) is not exceeded to avoid any risk of data loss.	-40°C to 45°C
1	1	Auto self refresh	Auto self refresh mode enabled. Self refresh power consumption and data retention are optimized for any given operating temperature condition.	All of the above

Micron Technology, Inc. reserves the right to change products or specifications without notice.
© 2018 Micron Technology, Inc. All rights reserved.

Figure 33: Auto Self Refresh Ranges

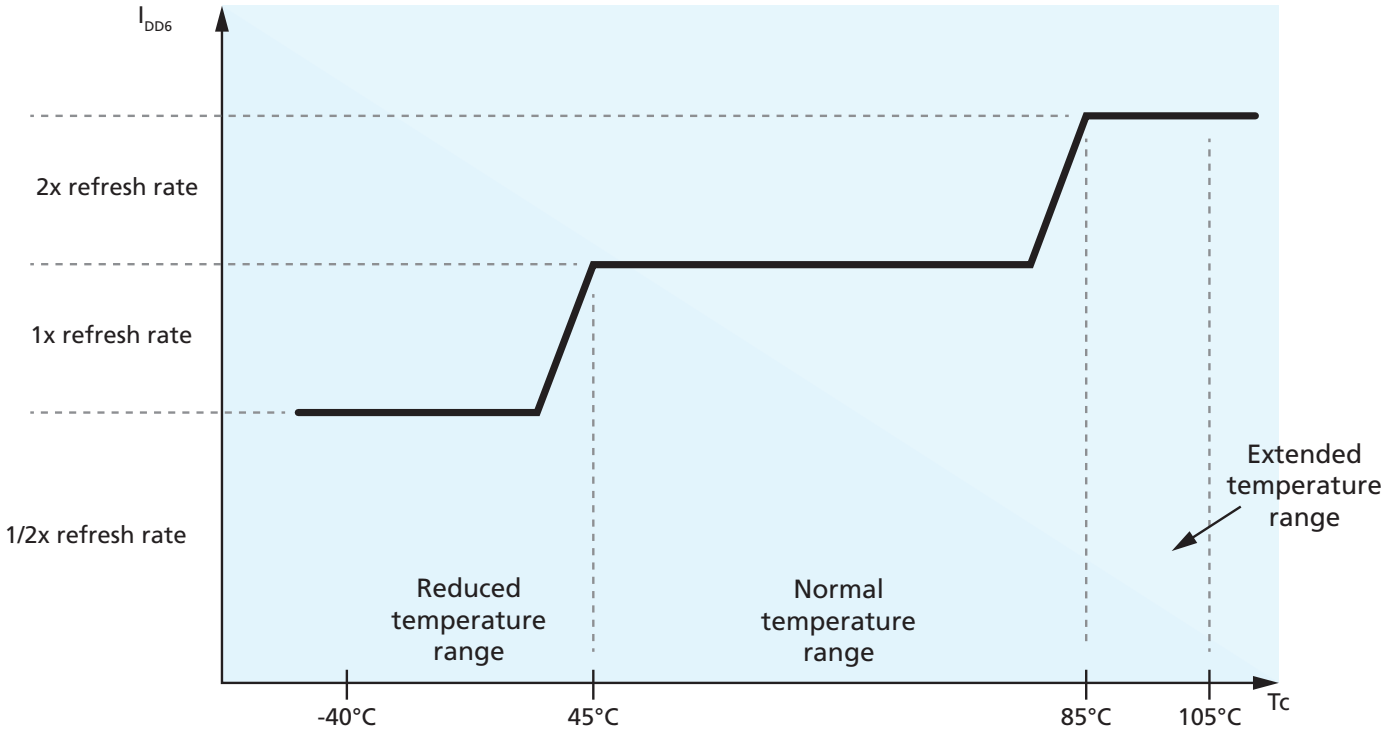

Micron Technology, Inc. reserves the right to change products or specifications without notice.
© 2018 Micron Technology, Inc. All rights reserved.

Multipurpose Register

The MULTIPURPOSE REGISTER (MPR) function, MPR access mode, is used to write/read specialized data to/from the DRAM. The MPR consists of four logical pages, MPR Page 0 through MPR Page 3, with each page having four 8-bit registers, MPR0 through MPR3. Page 0 can be read by any of three readout modes (serial, parallel, or staggered) while Pages 1, 2, and 3 can be read by only the serial readout mode. Page 3 is for DRAM vendor use only. MPR mode enable and page selection is done with MRS commands. Data bus inversion (DBI) is not allowed during MPR READ operation.

Once the MPR access mode is enabled (MR3[2] = 1), only the following commands are allowed: MRS, RD, RDA WR, WRA, DES, REF, and RESET; RDA/WRA have the same functionality as RD/WR which means the auto precharge part of RDA/WRA is ignored. Power-down mode and SELF REFRESH command are not allowed during MPR enable mode. No other command can be issued within ^{t}RFC after a REF command has been issued; 1x refresh (only) is to be used during MPR access mode. While in MPR access mode, MPR read or write sequences must be completed prior to a REFRESH command.

Figure 34: MPR Block Diagram

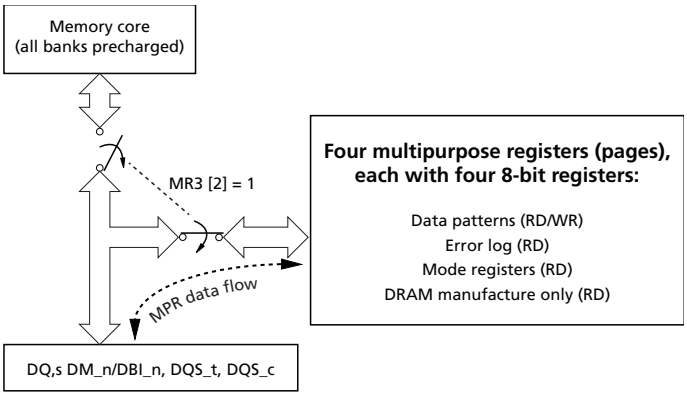

Table 28: MR3 Setting for the MPR Access Mode

Address	Operation Mode	Description
A[12:11]	MPR data read format	00 = Serial ..... 01 = Parallel 10 = Staggered .... 11 = Reserved
A2	MPR access	0 = Standard operation (MPR not enabled) 1 = MPR data flow enabled
A[1:0]	MPR page selection	00 = Page 0 .... 01 = Page 1 10 = Page 2 .... 11 = Page 3

Table 29: DRAM Address to MPR UI Translation

MPR Location	[7]	[6]	[5]	[4]	[3]	[2]	[1]	[0]
DRAM address – A*x*	A7	A6	A5	A4	A3	A2	A1	A0
MPR UI – UI*x*	UI0	UI1	UI2	UI3	UI4	UI5	UI6	UI7

Micron Technology, Inc. reserves the right to change products or specifications without notice.
© 2018 Micron Technology, Inc. All rights reserved.

Table 30: MPR Page and MPR*x* Definitions

Address	MPR Location	[7]	[6]	[5]	[4]	[3]	[2]	[1]	[0]	Note
MPR Page 0 – Read or Write (Data Patterns)										
BA[1:0]	00 = MPR0	0	1	0	1	0	1	0	1	Read/Write (default value listed)
	01 = MPR1	0	0	1	1	0	0	1	1	
	10 = MPR2	0	0	0	0	1	1	1	1	
	11 = MPR3	0	0	0	0	0	0	0	0	
MPR Page 1 – Read-only (Error Log)										
BA[1:0]	00 = MPR0	A7	A6	A5	A4	A3	A2	A1	A0	Read-only
	01 = MPR1	CAS_n/A15	WE_n/A14	A13	A12	A11	A10	A9	A8	
	10 = MPR2	PAR	ACT_n	BG1	BG0	BA1	BA0	A17	RAS_n/A16	
	11 = MPR3	CRC error status	CA parity error status CA parity latency: [5] = MR5[2], [4] = MR5[1], [3] = MR5[0]				C2	C1	C0	
MPR Page 2 – Read-only (MRS Readout)										
BA[1:0]	00 = MPR0	hPPR support	sPPR support	$R_{TT(WR)}$ MR2[11]	Temperature sensor status[2]		CRC write enable MR2[12]	$R_{TT(WR)}$ MR2[10:9]		Read-only
	01 = MPR1	V_{REFDQ} trainging range MR6[6]V_{REFDQ} training value: [6:1] = MR6[5:0]							Gear-down enable MR3[3]	
	10 = MPR2CAS latency: [7:3] = MR0[6:4,2,12]					CAS write latency [2:0] = MR2[5:3]				
	11 = MPR3$R_{TT(NOM)}$: [7:5] = MR1[10:8]			$R_{TT(Park)}$: [4:2] = MR5[8:6]			R_{ON}: [1:0] = MR1[2:1]			
MPR Page 3 – Read-only (Restricted, except for MPR3 [3:0])										
BA[1:0]	00 = MPR0	DC	DC	DC	DC	DC	DC	DC	DC	Read-only
	01 = MPR1	DC	DC	DC	DC	DC	DC	DC	DC	
	10 = MPR2	DC	DC	DC	DC	DC	DC	DC	DC	
	11 = MPR3	MBIST-PPR Support	DCMBIST-PPR Transparency			MAC	MAC	MAC	MAC	

Notes: 1. DC = "Don't Care"
2. MPR[4:3] 00 = Sub 1X refresh; MPR[4:3] 01 = 1X refresh; MPR[4:3] 10 = 2X refresh; MPR[4:3] 11 = Reserved

MPR Reads

MPR reads are supported using BL8 and BC4 modes. Burst length on-the-fly is not supported for MPR reads. Data bus inversion (DBI) is not allowed during MPR READ operation; the device will ignore the Read DBI enable setting in MR5 [12] when in MPR mode. READ commands for BC4 are supported with a starting column address of A[2:0] = 000 or 100. After power-up, the content of MPR Page 0 has the default values, which are defined in . MPR page 0 can be rewritten via an MPR WRITE command. The

Micron Technology, Inc. reserves the right to change products or specifications without notice.
© 2018 Micron Technology, Inc. All rights reserved.

device maintains the default values unless it is rewritten by the DRAM controller. If the DRAM controller does overwrite the default values (Page 0 only), the device will maintain the new values unless re-initialized or there is power loss.

Timing in MPR mode:

- Reads (back-to-back) from Page 0 may use ^{t}CCD_S or ^{t}CCD_L timing between READ commands
- Reads (back-to-back) from Pages 1, 2, or 3 may not use ^{t}CCD_S timing between READ commands; ^{t}CCD_L must be used for timing between READ commands

The following steps are required to use the MPR to read out the contents of a mode register (MPR Page *x*, MPR*y*).

1. The DLL must be locked if enabled.
2. Precharge all; wait until ^{t}RP is satisfied.
3. MRS command to MR3[2] = 1 (Enable MPR data flow), MR3[12:11] = MPR read format, and MR3[1:0] MPR page.
   a) MR3[12:11] MPR read format:
      i) 00 = Serial read format
      ii) 01 = Parallel read format
      iii) 10 = staggered read format
      iv) 11 = RFU
   b) MR3[1:0] MPR page:
      i) 00 = MPR Page 0
      ii) 01 = MPR Page 1
      iii) 10 = MPR Page 2
      iv) 11 = MPR Page 3
4. ^{t}MRD and ^{t}MOD must be satisfied.
5. Redirect all subsequent READ commands to specific MPR*x* location.
6. Issue RD or RDA command.
   a) BA1 and BA0 indicate MPR*x* location:
      i) 00 = MPR0
      ii) 01 = MPR1
      iii) 10 = MPR2
      iv) 11 = MPR3
   b) A12/BC = 0 or 1; BL8 or BC4 fixed-only, BC4 OTF not supported.
      i) If BL = 8 and MR0 A[1:0] = 01, A12/BC must be set to 1 during MPR READ commands.
   c) A2 = burst-type dependant:
      i) BL8: A2 = 0 with burst order fixed at 0, 1, 2, 3, 4, 5, 6, 7
      ii) BL8: A2 = 1 not allowed
      iii) BC4: A2 = 0 with burst order fixed at 0, 1, 2, 3, T, T, T, T
      iv) BC4: A2 = 1 with burst order fixed at 4, 5, 6, 7, T, T, T, T
   d) A[1:0] = 00, data burst is fixed nibble start at 00.
   e) Remaining address inputs, including A10, and BG1 and BG0 are "Don't Care."
7. After RL = AL + CL, DRAM bursts data from MPR*x* location; MPR readout format determined by MR3[A12,11,1,0].
8. Steps 5 through 7 may be repeated to read additional MPR*x* locations.

Micron Technology, Inc. reserves the right to change products or specifications without notice.
© 2018 Micron Technology, Inc. All rights reserved.

9. After the last MPR*x* READ burst, ^{t}MPRR must be satisfied prior to exiting.
10. Issue MRS command to exit MPR mode; MR3[2] = 0.
11. After the ^{t}MOD sequence is completed, the DRAM is ready for normal operation from the core (such as ACT).

MPR Readout Format

The MPR read data format can be set to three different settings: serial, parallel, and staggered.

MPR Readout Serial Format

The serial format is required when enabling the MPR function to read out the contents of an MR*x*, temperature sensor status, and the command address parity error frame. However, data bus calibration locations (four 8-bit registers) can be programmed to read out any of the three formats. The DRAM is required to drive associated strobes with the read data similar to normal operation (such as using MRS preamble settings).

Serial format implies that the same pattern is returned on all DQ lanes, as shown the table below, which uses values programmed into the MPR via [7:0] as 0111 1111.

Table 31: MPR Readout Serial Format

Serial	UI0	UI1	UI2	UI3	UI4	UI5	UI6	UI7
x4 Device								
DQ0	0	1	1	1	1	1	1	1
DQ1	0	1	1	1	1	1	1	1
DQ2	0	1	1	1	1	1	1	1
DQ3	0	1	1	1	1	1	1	1
x8 Device								
DQ0	0	1	1	1	1	1	1	1
DQ1	0	1	1	1	1	1	1	1
DQ2	0	1	1	1	1	1	1	1
DQ3	0	1	1	1	1	1	1	1
DQ4	0	1	1	1	1	1	1	1
DQ5	0	1	1	1	1	1	1	1
DQ6	0	1	1	1	1	1	1	1
DQ7	0	1	1	1	1	1	1	1
x16 Device								
DQ0	0	1	1	1	1	1	1	1
DQ1	0	1	1	1	1	1	1	1
DQ2	0	1	1	1	1	1	1	1
DQ3	0	1	1	1	1	1	1	1
DQ4	0	1	1	1	1	1	1	1
DQ5	0	1	1	1	1	1	1	1
DQ6	0	1	1	1	1	1	1	1
DQ7	0	1	1	1	1	1	1	1

Micron Technology, Inc. reserves the right to change products or specifications without notice.
© 2018 Micron Technology, Inc. All rights reserved.

Table 31: MPR Readout Serial Format (Continued)

Serial	UI0	UI1	UI2	UI3	UI4	UI5	UI6	UI7
DQ8	0	1	1	1	1	1	1	1
DQ9	0	1	1	1	1	1	1	1
DQ10	0	1	1	1	1	1	1	1
DQ11	0	1	1	1	1	1	1	1
DQ12	0	1	1	1	1	1	1	1
DQ13	0	1	1	1	1	1	1	1
DQ14	0	1	1	1	1	1	1	1
DQ15	0	1	1	1	1	1	1	1

MPR Readout Parallel Format

Parallel format implies that the MPR data is returned in the first data UI and then repeated in the remaining UIs of the burst, as shown in the table below. Data pattern location 0 is the only location used for the parallel format. RD/RDA from data pattern locations 1, 2, and 3 are not allowed with parallel data return mode. In this example, the pattern programmed in the data pattern location 0 is 0111 1111. The x4 configuration only outputs the first four bits (0111 in this example). For the x16 configuration, the same pattern is repeated on both the upper and lower bytes.

Table 32: MPR Readout – Parallel Format

Parallel	UI0	UI1	UI2	UI3	UI4	UI5	UI6	UI7
x4 Device								
DQ0	0	0	0	0	0	0	0	0
DQ1	1	1	1	1	1	1	1	1
DQ2	1	1	1	1	1	1	1	1
DQ3	1	1	1	1	1	1	1	1
x8 Device								
DQ0	0	0	0	0	0	0	0	0
DQ1	1	1	1	1	1	1	1	1
DQ2	1	1	1	1	1	1	1	1
DQ3	1	1	1	1	1	1	1	1
DQ4	1	1	1	1	1	1	1	1
DQ5	1	1	1	1	1	1	1	1
DQ6	1	1	1	1	1	1	1	1
DQ7	1	1	1	1	1	1	1	1
x16 Device								
DQ0	0	0	0	0	0	0	0	0
DQ1	1	1	1	1	1	1	1	1
DQ2	1	1	1	1	1	1	1	1
DQ3	1	1	1	1	1	1	1	1
DQ4	1	1	1	1	1	1	1	1

Micron Technology, Inc. reserves the right to change products or specifications without notice.
© 2018 Micron Technology, Inc. All rights reserved.

Table 32: MPR Readout – Parallel Format

Parallel	UI0	UI1	UI2	UI3	UI4	UI5	UI6	UI7
DQ5	1	1	1	1	1	1	1	1
DQ6	1	1	1	1	1	1	1	1
DQ7	1	1	1	1	1	1	1	1
DQ8	0	0	0	0	0	0	0	0
DQ9	1	1	1	1	1	1	1	1
DQ10	1	1	1	1	1	1	1	1
DQ11	1	1	1	1	1	1	1	1
DQ12	1	1	1	1	1	1	1	1
DQ13	1	1	1	1	1	1	1	1
DQ14	1	1	1	1	1	1	1	1
DQ15	1	1	1	1	1	1	1	1

MPR Readout Staggered Format

Staggered format of data return is defined as the staggering of the MPR data across the lanes. In this mode, an RD/RDA command is issued to a specific data pattern location and then the data is returned on the DQ from each of the different data pattern locations. For the x4 configuration, an RD/RDA to data pattern location 0 will result in data from location 0 being driven on DQ0, data from location 1 being driven on DQ1, data from location 2 being driven on DQ2, and so on, as shown below. Similarly, an RD/RDA command to data pattern location 1 will result in data from location 1 being driven on DQ0, data from location 2 being driven on DQ1, data from location 3 being driven on DQ2, and so on. Examples of different starting locations are also shown.

Table 33: MPR Readout Staggered Format, x4

x4 READ MPR0 Command		x4 READ MPR1 Command		x4 READ MPR2 Command		x4 READ MPR3 Command	
Stagger	UI[7:0]	Stagger	UI[7:0]	Stagger	UI[7:0]	Stagger	UI[7:0]
DQ0	MPR0	DQ0	MPR1	DQ0	MPR2	DQ0	MPR3
DQ1	MPR1	DQ1	MPR2	DQ1	MPR3	DQ1	MPR0
DQ2	MPR2	DQ2	MPR3	DQ2	MPR0	DQ2	MPR1
DQ3	MPR3	DQ3	MPR0	DQ3	MPR1	DQ3	MPR2

It is expected that the DRAM can respond to back-to-back RD/RDA commands to the MPR for all DDR4 frequencies so that a sequence (such as the one that follows) can be created on the data bus with no bubbles or clocks between read data. In this case, the system memory controller issues a sequence of RD(MPR0), RD(MPR1), RD(MPR2), RD(MPR3), RD(MPR0), RD(MPR1), RD(MPR2), and RD(MPR3).

Table 34: MPR Readout Staggered Format, x4 – Consecutive READs

Stagger	UI[7:0]	UI[15:8]	UI[23:16]	UI[31:24]	UI[39:32]	UI[47:40]	UI[55:48]	UI[63:56]
DQ0	MPR0	MPR1	MPR2	MPR3	MPR0	MPR1	MPR2	MPR3
DQ1	MPR1	MPR2	MPR3	MPR0	MPR1	MPR2	MPR3	MPR0
DQ2	MPR2	MPR3	MPR0	MPR1	MPR2	MPR3	MPR0	MPR1
DQ3	MPR3	MPR0	MPR1	MPR2	MPR3	MPR0	MPR1	MPR2

Micron Technology, Inc. reserves the right to change products or specifications without notice.
© 2018 Micron Technology, Inc. All rights reserved.

For the x8 configuration, the same pattern is repeated on the lower nibble as on the upper nibble. READs to other MPR data pattern locations follow the same format as the x4 case. A read example to MPR0 for x8 and x16 configurations is shown below.

Table 35: MPR Readout Staggered Format, x8 and x16

x8 READ MPR0 Command		x16 READ MPR0 Command		x16 READ MPR0 Command	
Stagger	**UI[7:0]**	**Stagger**	**UI[7:0]**	**Stagger**	**UI[7:0]**
DQ0	MPR0	DQ0	MPR0	DQ8	MPR0
DQ1	MPR1	DQ1	MPR1	DQ9	MPR1
DQ2	MPR2	DQ2	MPR2	DQ10	MPR2
DQ3	MPR3	DQ3	MPR3	DQ11	MPR3
DQ4	MPR0	DQ4	MPR0	DQ12	MPR0
DQ5	MPR1	DQ5	MPR1	DQ13	MPR1
DQ6	MPR2	DQ6	MPR2	DQ14	MPR2
DQ7	MPR3	DQ7	MPR3	DQ15	MPR3

MPR READ Waveforms

The following waveforms show MPR read accesses.

Figure 35: MPR READ Timing

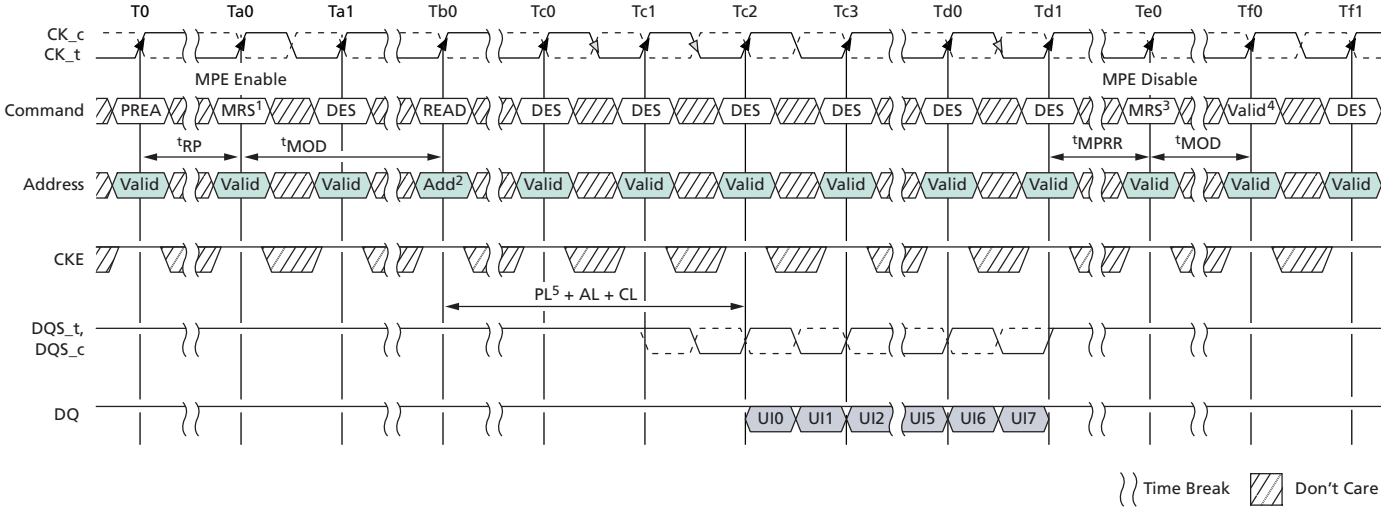

Notes: 1. ^{t}CCD_S = 4^{t}CK, Read Preamble = 1^{t}CK.
2. Address setting:
A[1:0] = 00b (data burst order is fixed starting at nibble, always 00b here)
A2 = 0b (for BL = 8, burst order is fixed at 0, 1, 2, 3, 4, 5, 6, 7)
BA1 and BA0 indicate the MPR location
A10 and other address pins are "Don't Care," including BG1 and BG0. A12 is "Don't Care" when MR0 A[1:0] = 00 or 10 and must be 1b when MR0 A[1:0] = 01
3. Multipurpose registers read/write disable (MR3 A2 = 0).
4. Continue with regular DRAM command.
5. Parity latency (PL) is added to data output delay when CA parity latency mode is enabled.

Micron Technology, Inc. reserves the right to change products or specifications without notice.
© 2018 Micron Technology, Inc. All rights reserved.

Figure 36: MPR Back-to-Back READ Timing

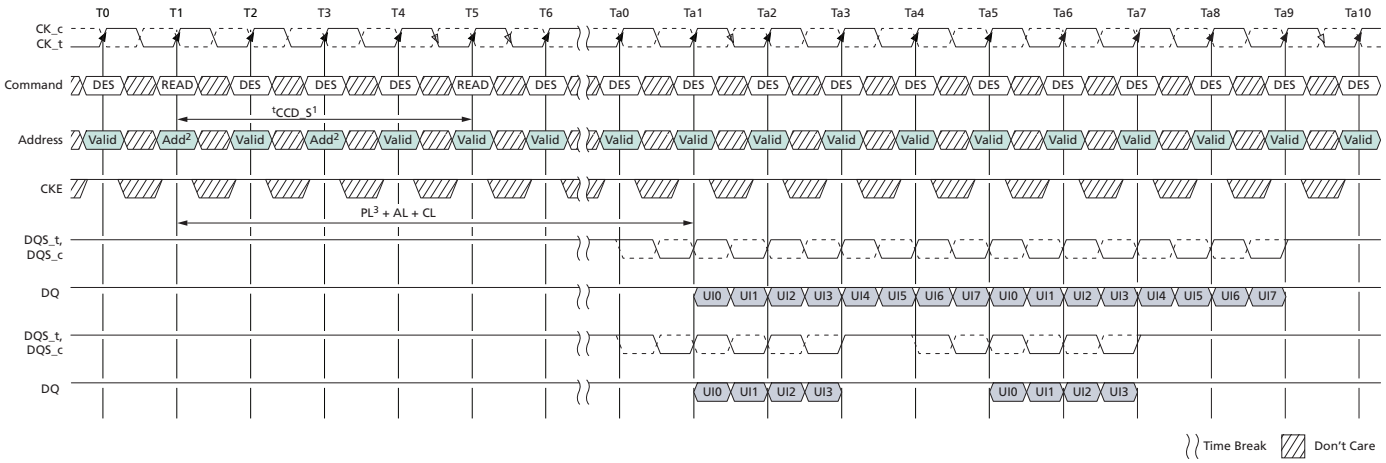

Notes: 1. ^{t}CCD_S = 4^{t}CK, Read Preamble = 1^{t}CK.
2. Address setting:
A[1:0] = 00b (data burst order is fixed starting at nibble, always 00b here)
A2 = 0b (for BL = 8, burst order is fixed at 0, 1, 2, 3, 4, 5, 6, 7; for BC = 4, burst order is fixed at 0, 1, 2, 3, T, T, T, T)
BA1 and BA0 indicate the MPR location
A10 and other address pins are "Don't Care," including BG1 and BG0. A12 is "Don't Care" when MR0 A[1:0] = 00 or 10 and must be 1b when MR0 A[1:0] = 01
3. Parity latency (PL) is added to data output delay when CA parity latency mode is enabled.

Figure 37: MPR READ-to-WRITE Timing

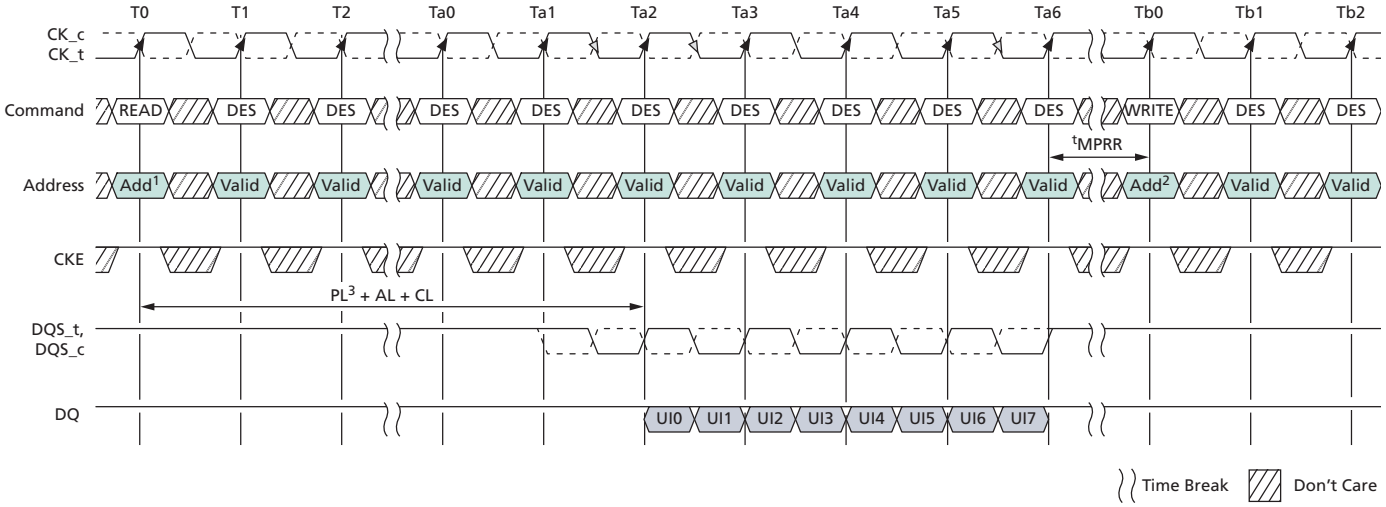

Notes: 1. Address setting:
A[1:0] = 00b (data burst order is fixed starting at nibble, always 00b here)
A2 = 0b (for BL = 8, burst order is fixed at 0, 1, 2, 3, 4, 5, 6, 7)
BA1 and BA0 indicate the MPR location
A10 and other address pins are "Don't Care," including BG1 and BG0. A12 is "Don't Care" when MR0 A[1:0] = 00 and must be 1b when MR0 A[1:0] = 01
2. Address setting:
BA1 and BA0 indicate the MPR location
A[7:0] = data for MPR
BA1 and BA0 indicate the MPR location
A10 and other address pins are "Don't Care"

Micron Technology, Inc. reserves the right to change products or specifications without notice.
© 2018 Micron Technology, Inc. All rights reserved.

3. Parity latency (PL) is added to data output delay when CA parity latency mode is enabled.

MPR Writes

MPR access mode allows 8-bit writes to the MPR Page 0 using the address bus A[7:0]. Data bus inversion (DBI) is not allowed during MPR WRITE operation. The DRAM will maintain the new written values unless re-initialized or there is power loss.

The following steps are required to use the MPR to write to mode register MPR Page 0.

1. The DLL must be locked if enabled.
2. Precharge all; wait until ^{t}RP is satisfied.
3. MRS command to MR3[2] = 1 (enable MPR data flow) and MR3[1:0] = 00 (MPR Page 0); writes to 01, 10, and 11 are not allowed.
4. ^{t}MRD and ^{t}MOD must be satisfied.
5. Redirect all subsequent WRITE commands to specific MPR*x* location.
6. Issue WR or WRA command:
   a) BA1 and BA0 indicate MPR*x* location
      i) 00 = MPR0
      ii) 01 = MPR1
      iii) 10 = MPR2
      iv) 11 = MPR3
   b) A[7:0] = data for MPR Page 0, mapped A[7:0] to UI[7:0].
   c) Remaining address inputs, including A10, and BG1 and BG0 are "Don't Care."
7. ^{t}WR_MPR must be satisfied to complete MPR WRITE.
8. Steps 5 through 7 may be repeated to write additional MPR*x* locations.
9. After the last MPR*x* WRITE, ^{t}MPRR must be satisfied prior to exiting.
10. Issue MRS command to exit MPR mode; MR3[2] = 0.
11. When the ^{t}MOD sequence is completed, the DRAM is ready for normal operation from the core (such as ACT).

MPR WRITE Waveforms

The following waveforms show MPR write accesses.

Micron Technology, Inc. reserves the right to change products or specifications without notice.
© 2018 Micron Technology, Inc. All rights reserved.

Figure 38: MPR WRITE and WRITE-to-READ Timing

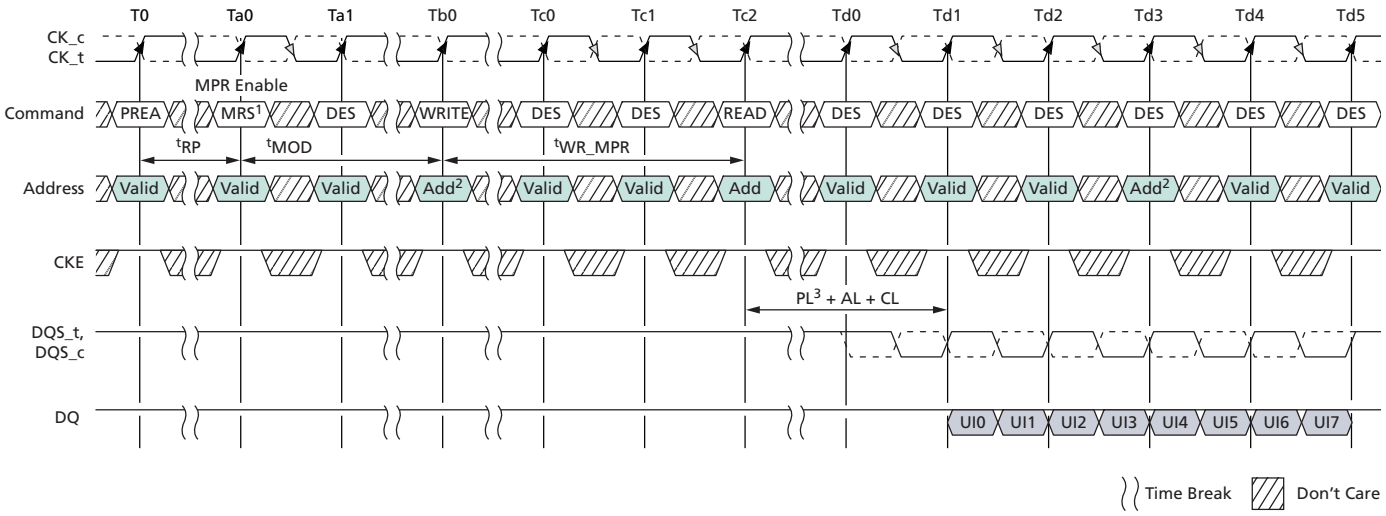

Notes: 1. Multipurpose registers read/write enable (MR3 A2 = 1).
2. Address setting:
BA1 and BA0 indicate the MPR location
A10 and other address pins are "Don't Care"
3. Parity latency (PL) is added to data output delay when CA parity latency mode is enabled.

Figure 39: MPR Back-to-Back WRITE Timing

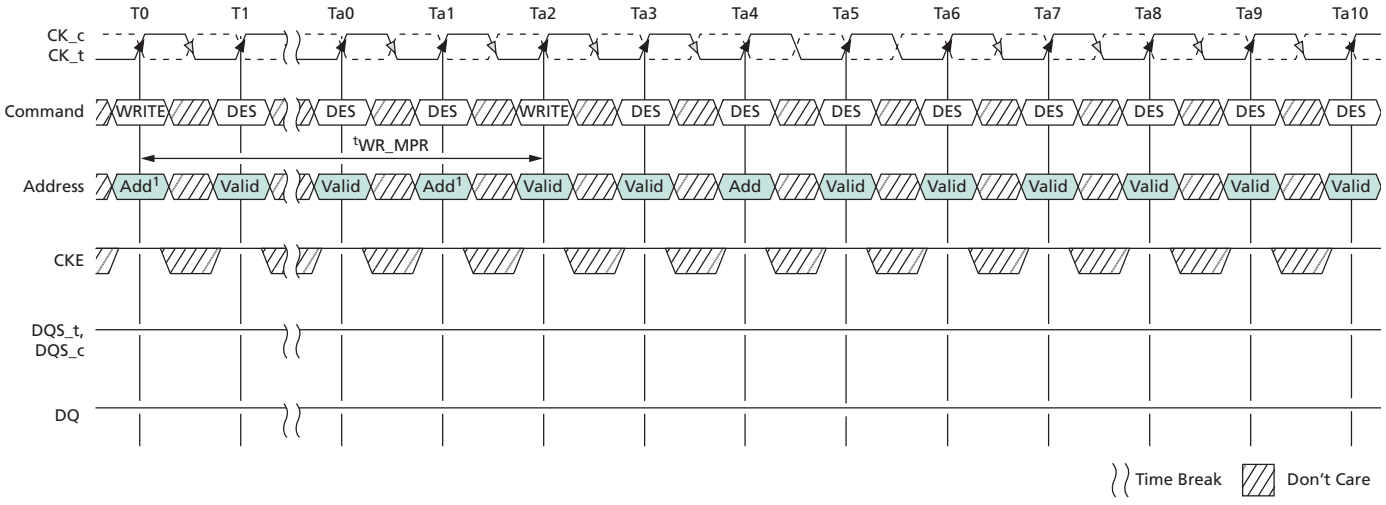

Note: 1. Address setting:
BA1 and BA0 indicate the MPR location
A[7:0] = data for MPR
A10 and other address pins are "Don't Care"

Micron Technology, Inc. reserves the right to change products or specifications without notice.
© 2018 Micron Technology, Inc. All rights reserved.

MPR REFRESH Waveforms

The following waveforms show MPR accesses interaction with refreshes.

Figure 40: REFRESH Timing

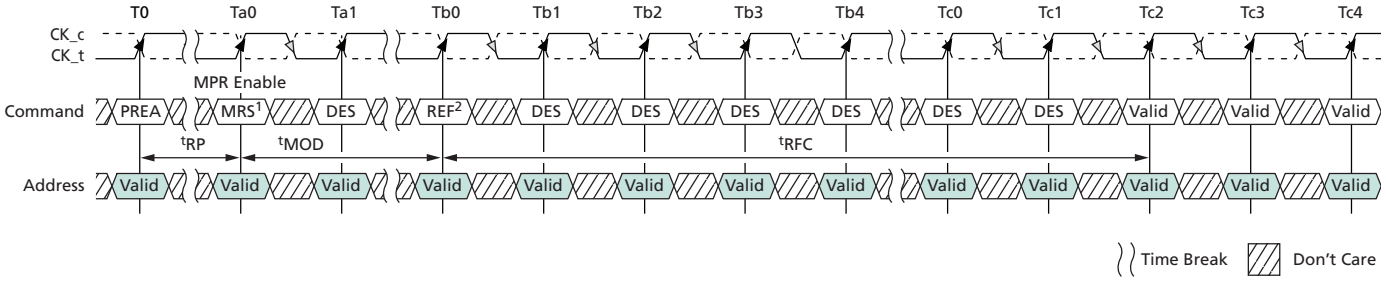

Notes: 1. Multipurpose registers read/write enable (MR3 A2 = 1). Redirect all subsequent read and writes to MPR locations.
2. 1x refresh is only allowed when MPR mode is enabled.

Figure 41: READ-to-REFRESH Timing

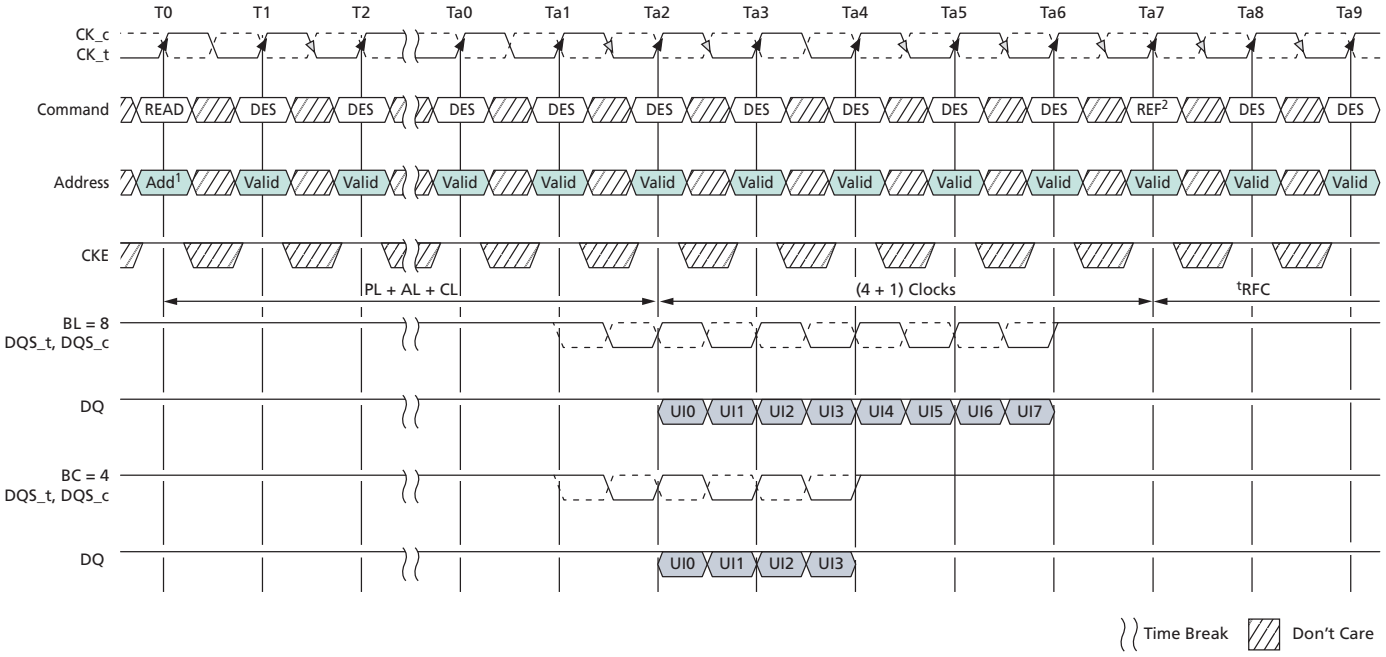

Notes: 1. Address setting:
A[1:0] = 00b (data burst order is fixed starting at nibble, always 00b here)
A2 = 0b (for BL = 8, burst order is fixed at 0, 1, 2, 3, 4, 5, 6, 7)
BA1 and BA0 indicate the MPR location
A10 and other address pins are "Don't Care," including BG1 and BG0. A12 is "Don't Care" when MR0 A[1:0] = 00 or 10, and must be 1b when MR0 A[1:0] = 01
2. 1x refresh is only allowed when MPR mode is enabled.

Micron Technology, Inc. reserves the right to change products or specifications without notice.
© 2018 Micron Technology, Inc. All rights reserved.

Figure 42: WRITE-to-REFRESH Timing

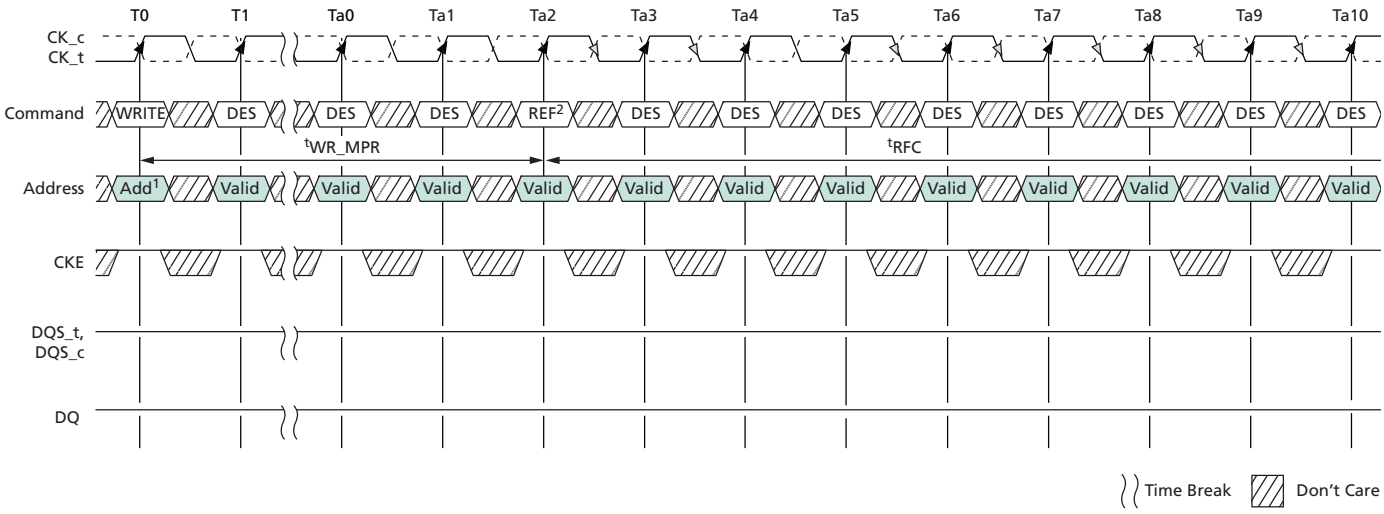

Notes: 1. Address setting:
BA1 and BA0 indicate the MPR location
A[7:0] = data for MPR
A10 and other address pins are "Don't Care"
2. 1x refresh is only allowed when MPR mode is enabled.

Micron Technology, Inc. reserves the right to change products or specifications without notice.
© 2018 Micron Technology, Inc. All rights reserved.

Gear-Down Mode

The DDR4 SDRAM defaults in 1/2 rate (1N) clock mode and uses a low-frequency MRS command (the MRS command has relaxed setup and hold) followed by a sync pulse (first CS pulse after MRS setting) to align the proper clock edge for operating the control lines CS_n, CKE, and ODT when in 1/4 rate (2N) mode. Gear-down mode is only supported at DDR4-2666 and faster. For operation in 1/2 rate mode, neither an MRS command or a sync pulse is required. Gear-down mode may only be entered during initialization or self refresh exit and may only be exited during self refresh exit. CAL mode and CA parity mode must be disabled prior to gear-down mode entry. The two modes may be enabled after ^{t}SYNC_GEAR and ^{t}CMD_GEAR periods have been satisfied. The general sequence for operation in 1/4 rate during initialization is as follows:

1. The device defaults to a 1N mode internal clock at power-up/reset.
2. Assertion of reset.
3. Assertion of CKE enables the DRAM.
4. MRS is accessed with a low-frequency N × ^{t}CK gear-down MRS command. (N^{t}CK static MRS command is qualified by 1N CS_n.)
5. The memory controller will send a 1N sync pulse with a low-frequency N × ^{t}CK NOP command. ^{t}SYNC_GEAR is an even number of clocks. The sync pulse is on an even edge clock boundary from the MRS command.
6. Initialization sequence, including the expiration of ^{t}DLLK and ^{t}ZQinit, starts in 2N mode after ^{t}CMD_GEAR from 1N sync pulse.

The device resets to 1N gear-down mode after entering self refresh. The general sequence for operation in gear-down after self refresh exit is as follows:

1. MRS is set to 1, via MR3[3], with a low-frequency N × ^{t}CK gear-down MRS command.
   a) The N^{t}CK static MRS command is qualified by 1N CS_n, which meets ^{t}XS or ^{t}XS_ABORT.
   b) Only a REFRESH command may be issued to the DRAM before the N^{t}CK static MRS command.
2. The DRAM controller sends a 1N sync pulse with a low-frequency N × ^{t}CK NOP command.
   a) ^{t}SYNC_GEAR is an even number of clocks.
   b) The sync pulse is on even edge clock boundary from the MRS command.
3. A valid command not requiring locked DLL is available in 2N mode after ^{t}CMD_GEAR from the 1N sync pulse.
   a) A valid command requiring locked DLL is available in 2N mode after ^{t}XSDLL or ^{t}DLLK from the 1N sync pulse.
4. If operation is in 1N mode after self refresh exit, N × ^{t}CK MRS command or sync pulse is not required during self refresh exit. The minimum exit delay to the first valid command is ^{t}XS, or ^{t}XS_ABORT.

The DRAM may be changed from 2N to 1N by entering self refresh mode, which will reset to 1N mode. Changing from 2N to by any other means can result in loss of data and make operation of the DRAM uncertain.

When operating in 2N gear-down mode, the following MR settings apply:

- CAS latency (MR0[6:4,2]): Even number of clocks
- Write recovery and read to precharge (MR0[11:9]): Even number of clocks
- Additive latency (MR1[4:3]): CL - 2
- CAS WRITE latency (MR2 A[5:3]): Even number of clocks
- CS to command/address latency mode (MR4[8:6]): Even number of clocks

Micron Technology, Inc. reserves the right to change products or specifications without notice.
© 2018 Micron Technology, Inc. All rights reserved.

- CA parity latency mode (MR5[2:0]): Even number of clocks

Figure 43: Clock Mode Change from 1/2 Rate to 1/4 Rate (Initialization)

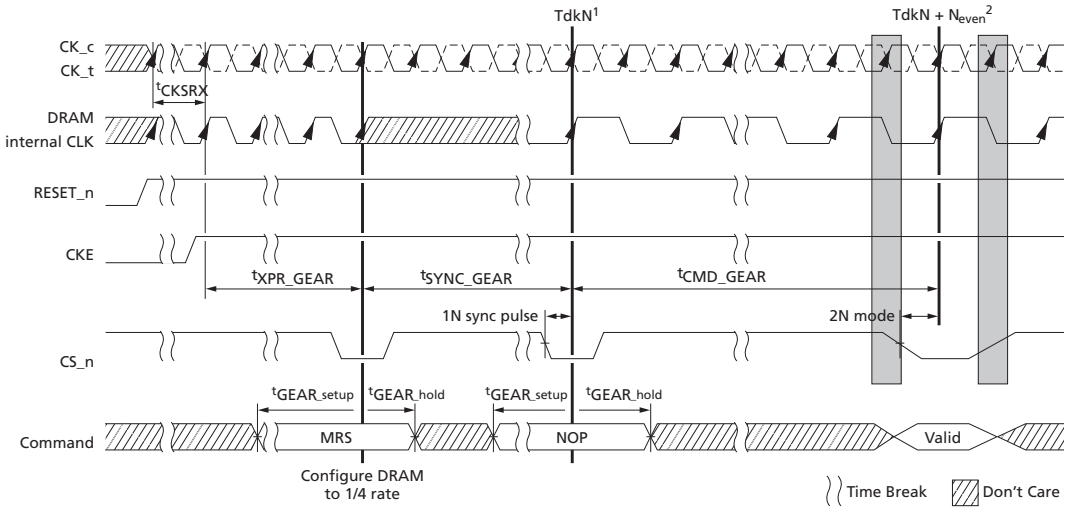

Notes: 1. After tSYNC_GEAR from GEAR-DOWN command, internal clock rate is changed at TdkN.
2. After tSYNC_GEAR + tCMD_GEAR from GEAR-DOWN command, both internal clock rate and command cycle are changed at TdkN + Neven.

Figure 44: Clock Mode Change After Exiting Self Refresh

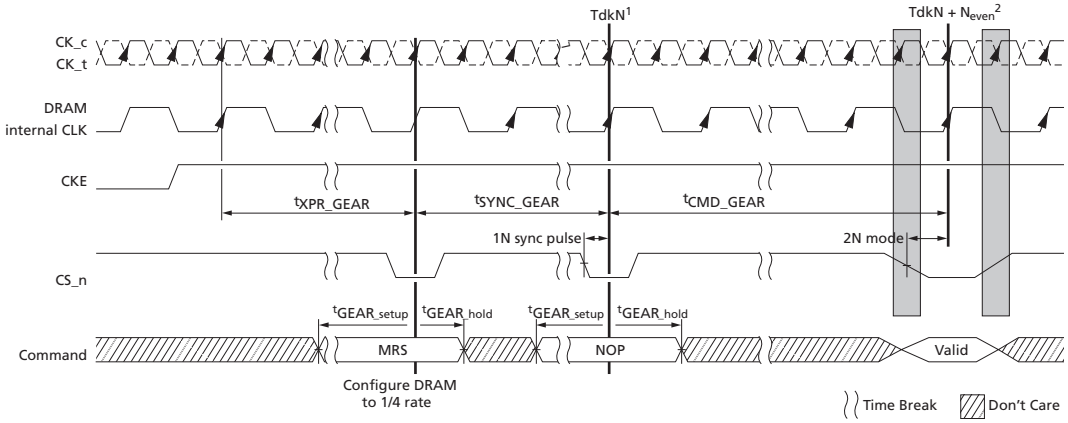

Notes: 1. After tSYNC_GEAR from GEAR-DOWN command, internal clock rate is changed at TdkN.
2. After tSYNC_GEAR + tCMD_GEAR from GEAR-DOWN command, both internal clock rate and command cycle are changed at TdkN + Neven.

Micron Technology, Inc. reserves the right to change products or specifications without notice.
© 2018 Micron Technology, Inc. All rights reserved.

Figure 45: Comparison Between Gear-Down Disable and Gear-Down Enable

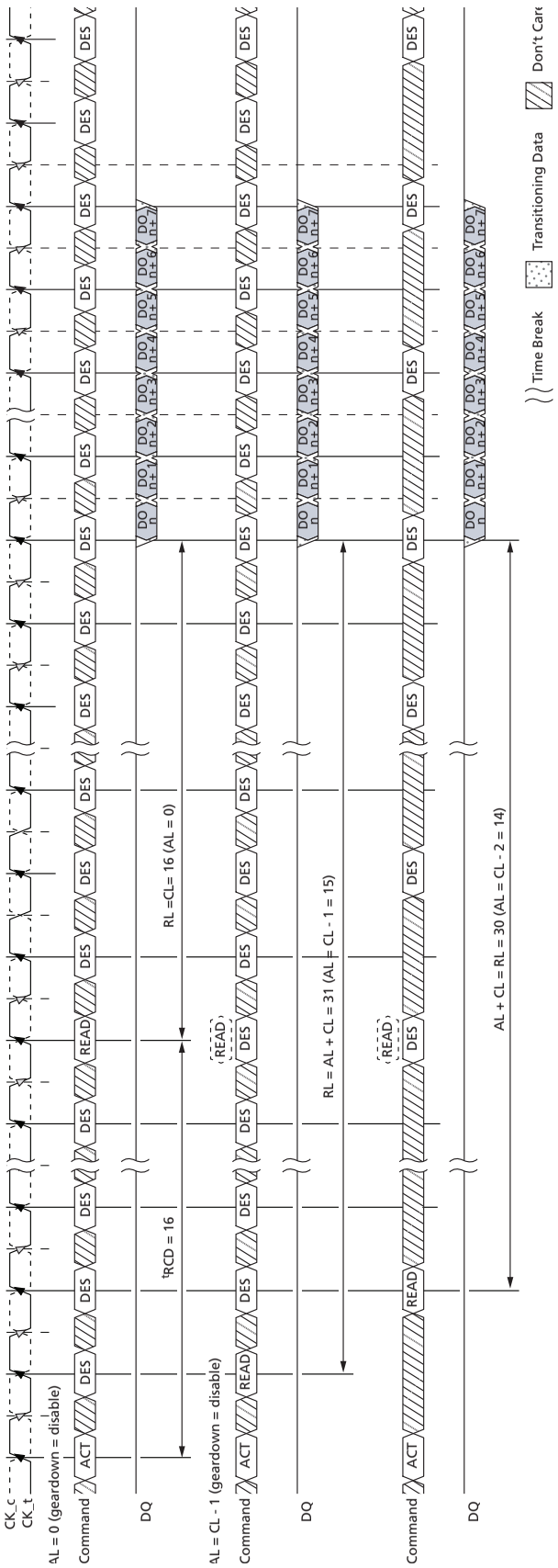

Micron Technology, Inc. reserves the right to change products or specifications without notice.
© 2018 Micron Technology, Inc. All rights reserved.

Maximum Power-Saving Mode

Maximum power-saving mode provides the lowest power mode where data retention is not required. When the device is in the maximum power-saving mode, it does not maintain data retention or respond to any external command, except the MAXIMUM POWER SAVING MODE EXIT command and during the assertion of RESET_n signal LOW. This mode is more like a “hibernate mode” than a typical power-saving mode. The intent is to be able to park the DRAM at a very low-power state; the device can be switched to an active state via the per-DRAM addressability (PDA) mode.

Maximum Power-Saving Mode Entry

Maximum power-saving mode is entered through an MRS command. For devices with shared control/address signals, a single DRAM device can be entered into the maximum power-saving mode using the per-DRAM addressability MRS command. Large CS_n hold time to CKE upon the mode exit could cause DRAM malfunction; as a result, CA parity, CAL, and gear-down modes must be disabled prior to the maximum power-saving mode entry MRS command.

The MRS command may use both address and DQ information, as defined in the Per-DRAM Addressability section. As illustrated in the figure below, after ^{t}MPED from the mode entry MRS command, the DRAM is not responsive to any input signals except CKE, CS_n, and RESET_n. All other inputs are disabled (external input signals may become High-Z). The system will provide a valid clock until ^{t}CKMPE expires, at which time clock inputs (CK) should be disabled (external clock signals may become High-Z).

Figure 46: Maximum Power-Saving Mode Entry

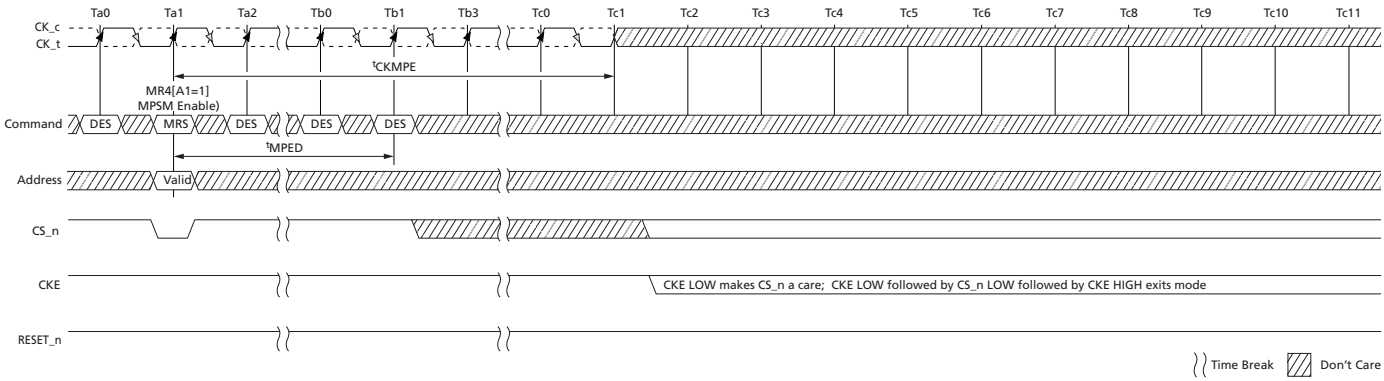

Micron Technology, Inc. reserves the right to change products or specifications without notice.
© 2018 Micron Technology, Inc. All rights reserved.

Maximum Power-Saving Mode Entry in PDA

The sequence and timing required for the maximum power-saving mode with the per-DRAM addressability enabled is illustrated in the figure below.

Figure 47: Maximum Power-Saving Mode Entry with PDA

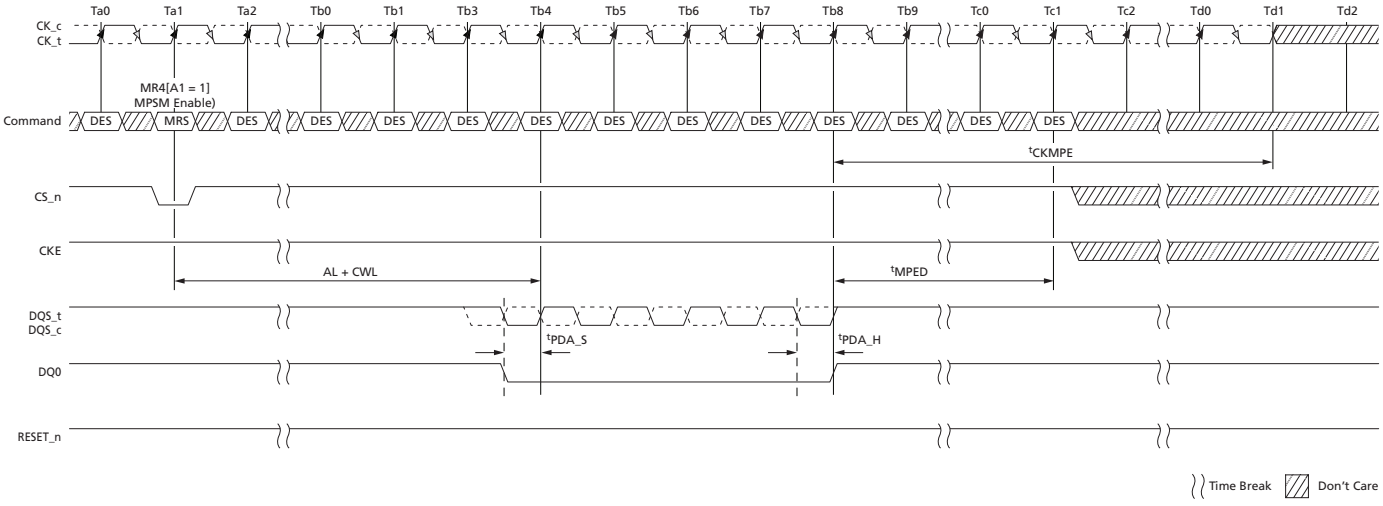

CKE Transition During Maximum Power-Saving Mode

The following figure shows how to maintain maximum power-saving mode even though the CKE input may toggle. To prevent the device from exiting the mode, CS_n should be HIGH at the CKE LOW-to-HIGH edge, with appropriate setup (^{t}MPX_S) and hold (^{t}MPX_H) timings.

Figure 48: Maintaining Maximum Power-Saving Mode with CKE Transition

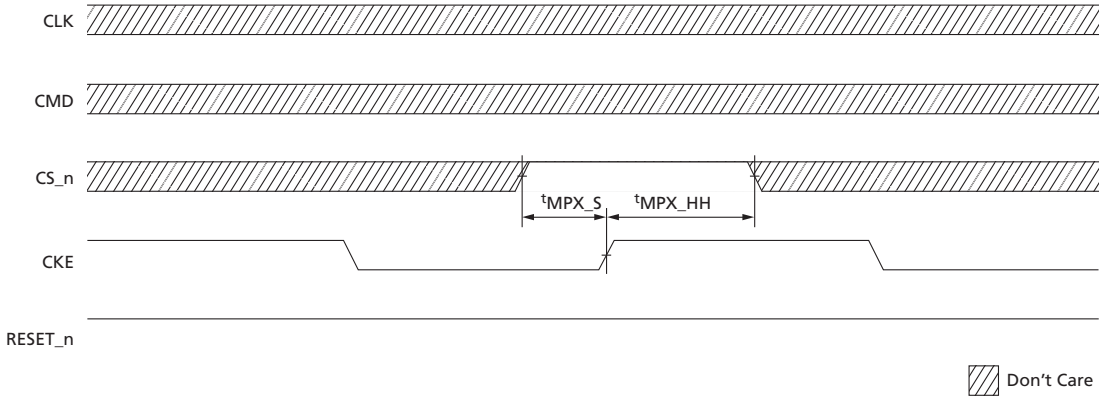

Maximum Power-Saving Mode Exit

To exit the maximum power-saving mode, CS_n should be LOW at the CKE LOW-to-HIGH transition, with appropriate setup (^{t}MPX_S) and hold (^{t}MPX_LH) timings, as shown in the figure below. Because the clock receivers (CK_t, CK_c) are disabled during this mode, CS_n = LOW is captured by the rising edge of the CKE signal. If the CS_n signal level is detected LOW, the DRAM clears the maximum power-saving mode MRS bit and begins the exit procedure from this mode. The external clock must be restarted and be stable by ^{t}CKMPX before the device can exit the maximum power-saving mode. During the exit time (^{t}XMP), only NOP and DES commands are allowed: NOP during ^{t}MPX_LH and

Micron Technology, Inc. reserves the right to change products or specifications without notice.
© 2018 Micron Technology, Inc. All rights reserved.

DES the remainder of ^{t}XMP. After ^{t}XMP expires, valid commands not requiring a locked DLL are allowed; after ^{t}XMP_DLL expires, valid commands requiring a locked DLL are allowed.

Figure 49: Maximum Power-Saving Mode Exit

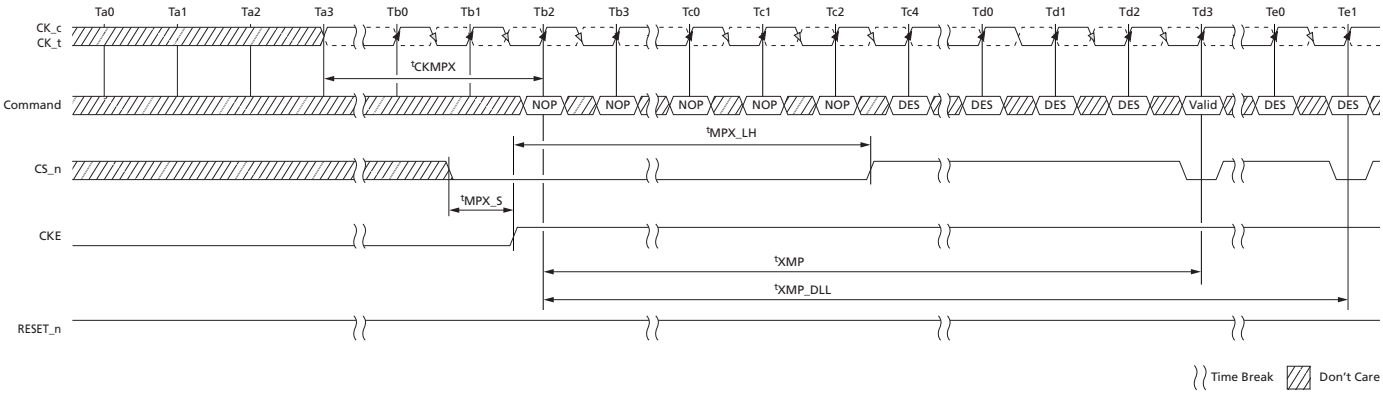

Micron Technology, Inc. reserves the right to change products or specifications without notice.
© 2018 Micron Technology, Inc. All rights reserved.

Command/Address Parity

Command/address (CA) parity takes the CA parity signal (PAR) input carrying the parity bit for the generated address and commands signals and matches it to the internally generated parity from the captured address and commands signals. CA parity is supported in the DLL enabled state only; if the DLL is disabled, CA parity is not supported.

Figure 50: Command/Address Parity Operation

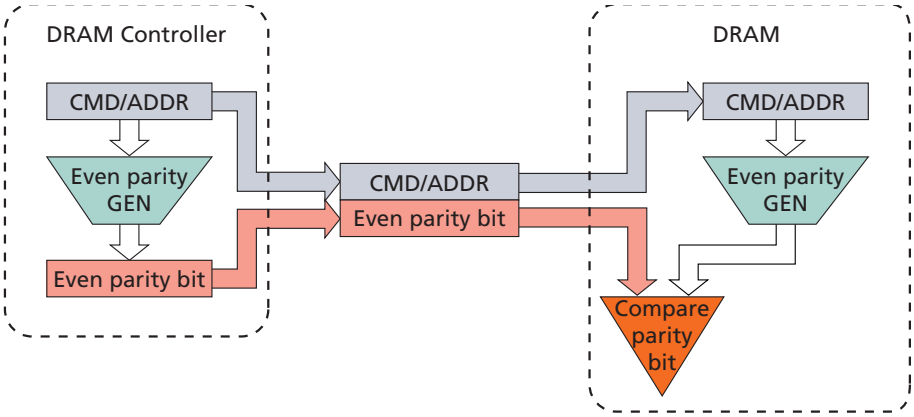

CA parity is disabled or enabled via an MRS command. If CA parity is enabled by programming a non-zero value to CA parity latency in the MR, the DRAM will ensure that there is no parity error before executing commands. There is an additional delay required for executing the commands versus when parity is disabled. The delay is programmed in the MR when CA parity is enabled (parity latency) and applied to all commands which are registered by CS_n (rising edge of CK_t and falling CS_n). The command is held for the time of the parity latency (PL) before it is executed inside the device. The command captured by the input clock has an internal delay before executing and is determined with PL. ALERT_n will go active when the DRAM detects a CA parity error.

CA parity covers ACT_n, RAS_n/A16, CAS_n/A15, WE_n/A14, the address bus including bank address and bank group bits, and C[2:0] on 3DS devices; the control signals CKE, ODT, and CS_n are not covered. For example, for a 4Gb x4 monolithic device, parity is computed across BG[1:0], BA[1:0], A16/RAS_n, A15/CAS_n, A14/ WE_n, A[13:0], and ACT_n. The DRAM treats any unused address pins internally as zeros; for example, if a common die has stacked pins but the device is used in a monolithic application, then the address pins used for stacking and not connected are treated internally as zeros.

The convention for parity is even parity; for example, valid parity is defined as an even number of ones across the inputs used for parity computation combined with the parity signal. In other words, the parity bit is chosen so that the total number of ones in the transmitted signal, including the parity bit, is even.

If a DRAM device detects a CA parity error in any command qualified by CS_n, it will perform the following steps:

1. Ignore the erroneous command. Commands in the MAX N*n*CK window (^{t}PAR_UNKNOWN) prior to the erroneous command are not guaranteed to be executed. When a READ command in this N*n*CK window is not executed, the device does not activate DQS outputs. If WRITE CRC is enabled and a WRITE CRC occurs during the ^{t}PAR_UNKNOWN window, the WRITE CRC Error Status Bit located at MR5[3] may or may not get set. When CA Parity and WRITE CRC are both enabled and a CA Parity occurs, the WRITE CRC Error Status Bit should be reset.
2. Log the error by storing the erroneous command and address bits in the MPR error log.

Micron Technology, Inc. reserves the right to change products or specifications without notice.
© 2018 Micron Technology, Inc. All rights reserved.

3. Set the parity error status bit in the mode register to 1. The parity error status bit must be set before the ALERT_n signal is released by the DRAM (that is, ^{t}PAR_ALERT_ON + ^{t}PAR_ALERT_PW (MIN)).
4. Assert the ALERT_n signal to the host (ALERT_n is active LOW) within ^{t}PAR_ALERT_ON time.
5. Wait for all in-progress commands to complete. These commands were received ^{t}PAR_UNKOWN before the erroneous command.
6. Wait for ^{t}RAS (MIN) before closing all the open pages. The DRAM is not executing any commands during the window defined by (^{t}PAR_ALERT_ON + ^{t}PAR_ALERT_PW).
7. After ^{t}PAR_ALERT_PW (MIN) has been satisfied, the device may de-assert ALERT_n.
   a) When the device is returned to a known precharged state, ALERT_n is allowed to be de-asserted.
8. After (^{t}PAR_ALERT_PW (MAX)) the DRAM is ready to accept commands for normal operation. Parity latency will be in effect; however, parity checking will not resume until the memory controller has cleared the parity error status bit by writing a zero. The DRAM will execute any erroneous commands until the bit is cleared; unless persistent mode is enabled.

- It is possible that the device might have ignored a REFRESH command during ^{t}PAR_ALERT_PW or the REFRESH command is the first erroneous frame, so it is recommended that extra REFRESH cycles be issued, as needed.
- The parity error status bit may be read anytime after ^{t}PAR_ALERT_ON + ^{t}PAR_ALERT_PW to determine which DRAM had the error. The device maintains the error log for the first erroneous command until the parity error status bit is reset to a zero or a second CA parity occurs prior to resetting.

The mode register for the CA parity error is defined as follows: CA parity latency bits are write only, the parity error status bit is read/write, and error logs are read-only bits. The DRAM controller can only program the parity error status bit to zero. If the DRAM controller illegally attempts to write a 1 to the parity error status bit, the DRAM can not be certain that parity will be checked; the DRAM may opt to block the DRAM controller from writing a 1 to the parity error status bit.

The device supports persistent parity error mode. This mode is enabled by setting MR5[9] = 1; when enabled, CA parity resumes checking after the ALERT_n is de-asserted, even if the parity error status bit remains a 1. If multiple errors occur before the error status bit is cleared the error log in MPR Page 1 should be treated as "Don't Care." In persistent parity error mode the ALERT_n pulse will be asserted and de-asserted by the DRAM as defined with the MIN and MAX value ^{t}PAR_ALERT_PW. The DRAM controller must issue DESELECT commands once it detects the ALERT_n signal, this response time is defined as ^{t}PAR_ALERT_RSP. The following figures capture the flow of events on the CA bus and the ALERT_n signal.

Table 36: Mode Register Setting for CA Parity

CA Parity Latency MR5[2:0][1]	Applicable Speed Bin	Parity Error Status	Parity Persistent Mode	Erroneous CA Frame
000 = Disabled	N/A	MR5 [4] 0 = Clear MR5 [4] 1 = Error	MR5 [9] 0 = Disabled- MR5 [9] 1 = Enabled	C[2:0], ACT_n, BG1, BG0, BA[1:0], PAR, A17, A16/RAS_n, A15/CAS_n, A14/WE_n, A[13:0]
001 = 4 clocks	1600, 1866, 2133			
010 = 5 clocks	2400, 2666			
011 = 6 clocks	2933, 3200			
100 = 8 clocks	RFU			
101 = Reserved	RFU			
110 = Reserved	RFU			
111 = Reserved	RFU			

Micron Technology, Inc. reserves the right to change products or specifications without notice.
© 2018 Micron Technology, Inc. All rights reserved.

Notes: 1. Parity latency is applied to all commands.
2. Parity latency can be changed only from a CA parity disabled state; for example, a direct change from PL = 3 to PL = 4 is not allowed. The correct sequence is PL = 3 to disabled to PL = 4.
3. Parity latency is applied to WRITE and READ latency. WRITE latency = AL + CWL + PL. READ latency = AL + CL + PL.

Figure 51: Command/Address Parity During Normal Operation

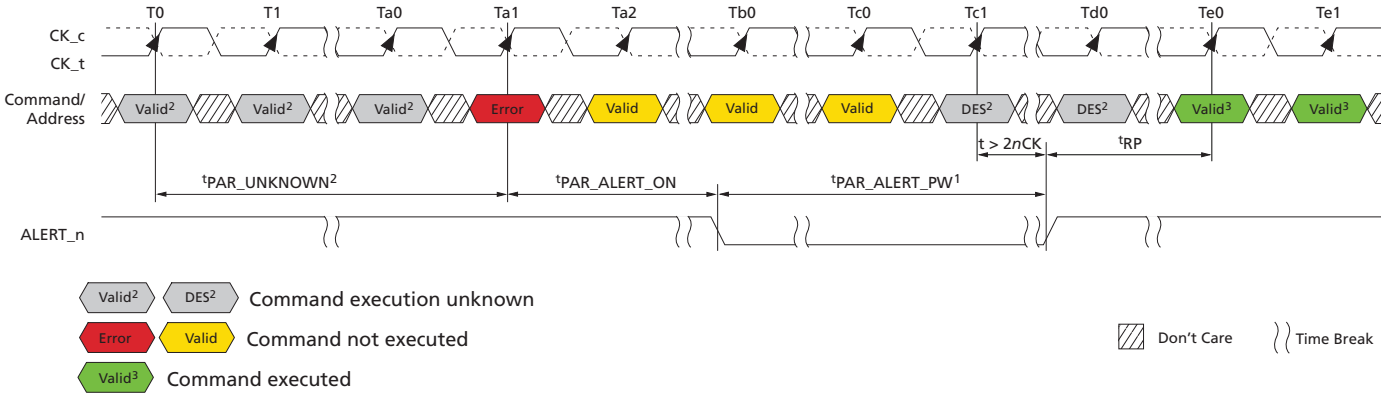

Notes: 1. DRAM is emptying queues. Precharge all and parity checking are off until parity error status bit is cleared.
2. Command execution is unknown; the corresponding DRAM internal state change may or may not occur. The DRAM controller should consider both cases and make sure that the command sequence meets the specifications.
If WRITE CRC is enabled and a WRITE CRC occurs during the tPAR_UNKNOWN window, the WRITE CRC Error Status Bit located at MR5[3] may or may not get set.
3. Normal operation with parity latency (CA parity persistent error mode disabled). Parity checking is off until parity error status bit is cleared.

Figure 52: Persistent CA Parity Error Checking Operation

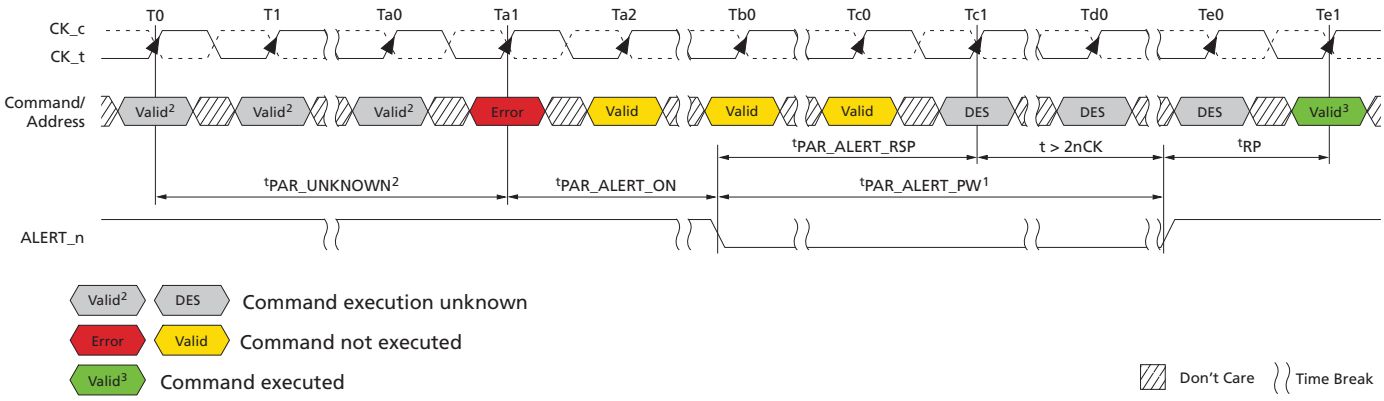

Notes: 1. DRAM is emptying queues. Precharge all and parity check re-enable finished by tPAR_ALERT_PW.
2. Command execution is unknown; the corresponding DRAM internal state change may or may not occur. The DRAM controller should consider both cases and make sure that the command sequence meets the specifications.
If WRITE CRC is enabled and a WRITE CRC occurs during the tPAR_UNKNOWN window, the WRITE CRC Error Status Bit located at MR5[3] may or may not get set
3. Normal operation with parity latency and parity checking (CA parity persistent error mode enabled).

Micron Technology, Inc. reserves the right to change products or specifications without notice.
© 2018 Micron Technology, Inc. All rights reserved.

Figure 53: CA Parity Error Checking – SRE Attempt

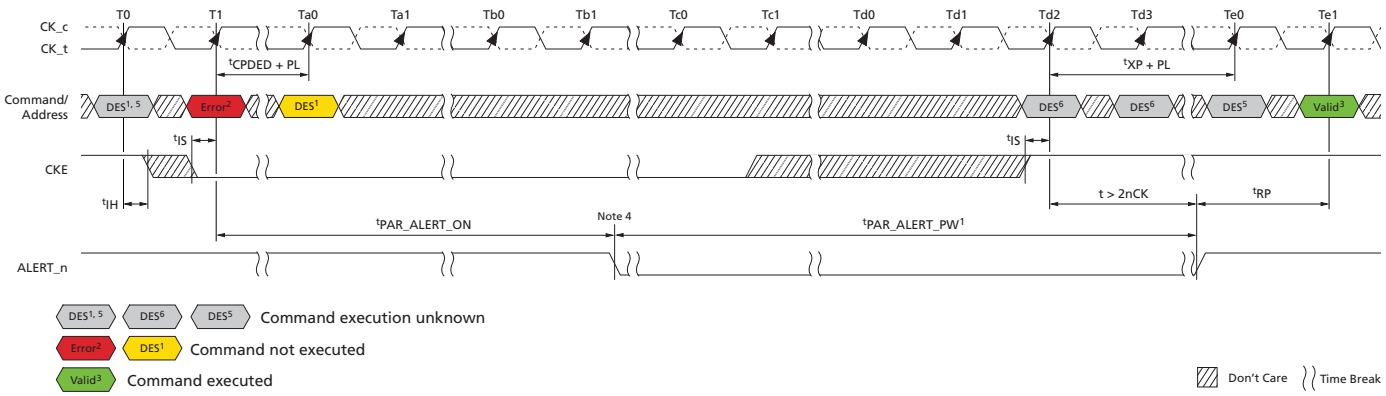

Notes: 1. Only DESELECT command is allowed.
2. SELF REFRESH command error. The DRAM masks the intended SRE command and enters precharge power-down.
3. Normal operation with parity latency (CA parity persistent error mode disabled). Parity checking is off until the parity error status bit cleared.
4. The controller cannot disable the clock until it has been capable of detecting a possible CA parity error.
5. Command execution is unknown; the corresponding DRAM internal state change may or may not occur. The DRAM controller should consider both cases and make sure that the command sequence meets the specifications.
6. Only a DESELECT command is allowed; CKE may go HIGH prior to Tc2 as long as DES commands are issued.

Figure 54: CA Parity Error Checking – SRX Attempt

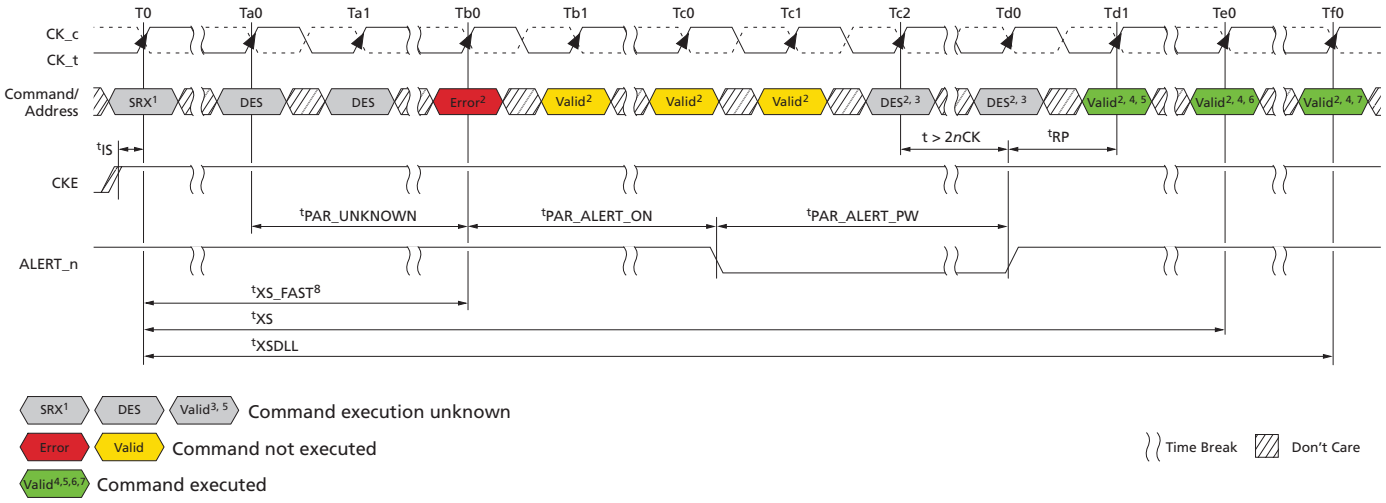

Notes: 1. Self refresh abort = disable: MR4 [9] = 0.
2. Input commands are bounded by tXSDLL, tXS, tXS_ABORT, and tXS_FAST timing.
3. Command execution is unknown; the corresponding DRAM internal state change may or may not occur. The DRAM controller should consider both cases and make sure that the command sequence meets the specifications.
4. Normal operation with parity latency (CA parity persistent error mode disabled). Parity checking off until parity error status bit cleared.
5. Only an MRS (limited to those described in the SELF REFRESH Operation section), ZQCS, or ZQCL command is allowed.
6. Valid commands not requiring a locked DLL.
7. Valid commands requiring a locked DLL.
8. This figure shows the case from which the error occurred after tXS_FAST. An error may also occur after tXS_ABORT and tXS.

Micron Technology, Inc. reserves the right to change products or specifications without notice.
© 2018 Micron Technology, Inc. All rights reserved.

Figure 55: CA Parity Error Checking – PDE/PDX

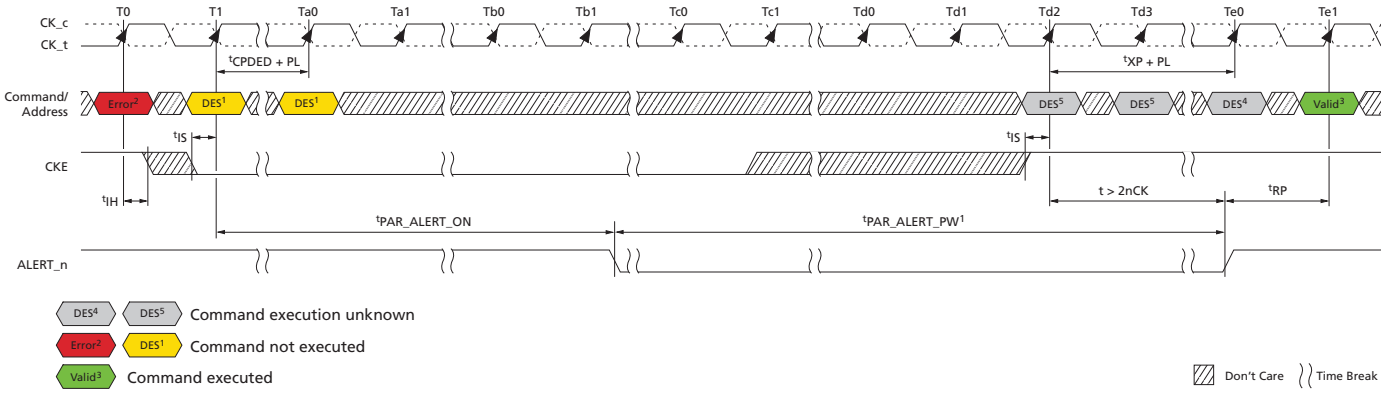

Notes: 1. Only DESELECT command is allowed.
2. Error could be precharge or activate.
3. Normal operation with parity latency (CA parity persistent error mode disabled). Parity checking is off until parity error status bit cleared.
4. Command execution is unknown; the corresponding DRAM internal state change may or may not occur. The DRAM controller should consider both cases and make sure that the command sequence meets the specifications.
5. Only a DESELECT command is allowed; CKE may go HIGH prior to Td2 as long as DES commands are issued.

Figure 56: Parity Entry Timing Example – tMRD_PAR

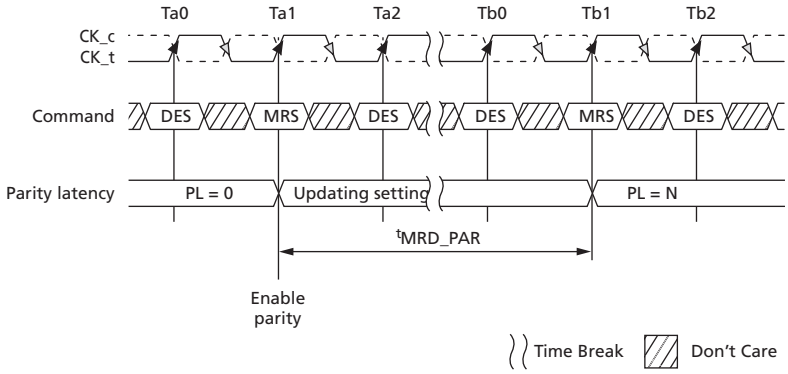

Note: 1. tMRD_PAR = tMOD + N; where N is the programmed parity latency.

Figure 57: Parity Entry Timing Example – tMOD_PAR

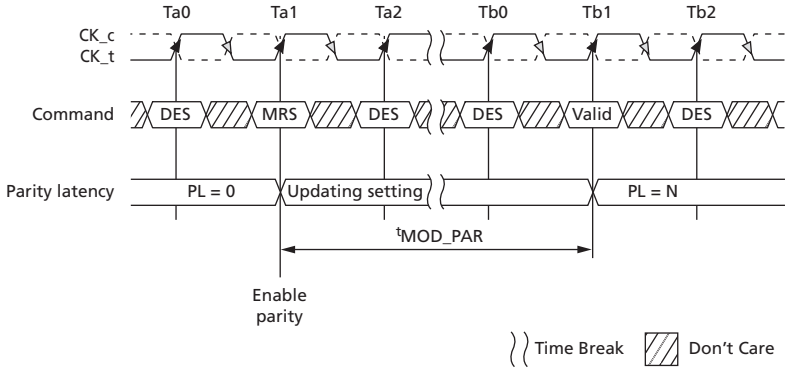

Note: 1. tMOD_PAR = tMOD + N; where N is the programmed parity latency.

Micron Technology, Inc. reserves the right to change products or specifications without notice.
© 2018 Micron Technology, Inc. All rights reserved.

Figure 58: Parity Exit Timing Example – ^{t}MRD_PAR

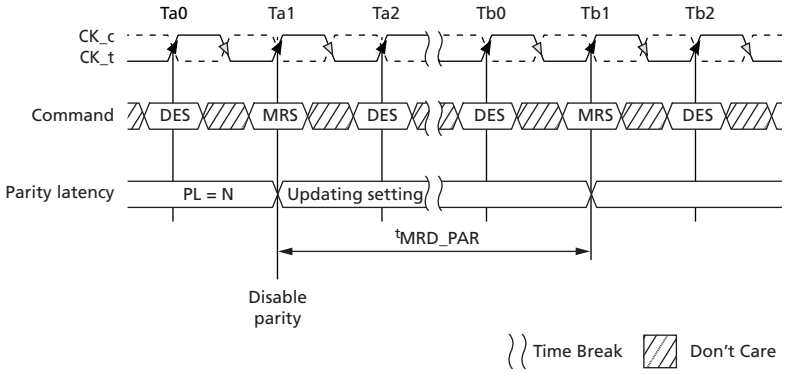

Note: 1. ^{t}MRD_PAR = ^{t}MOD + N; where N is the programmed parity latency.

Figure 59: Parity Exit Timing Example – ^{t}MOD_PAR

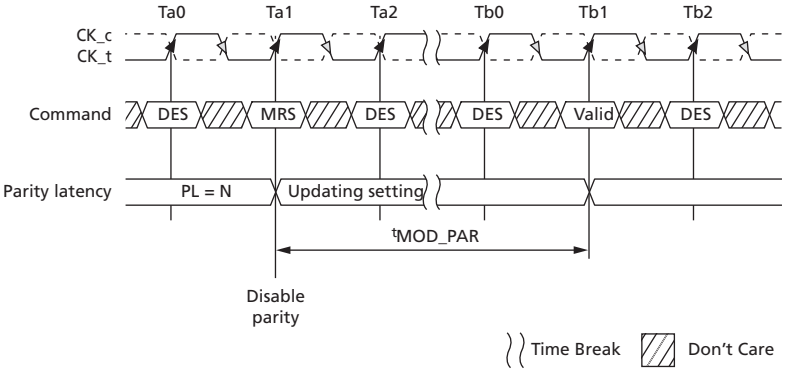

Note: 1. ^{t}MOD_PAR = ^{t}MOD + N; where N is the programmed parity latency.

Micron Technology, Inc. reserves the right to change products or specifications without notice.
© 2018 Micron Technology, Inc. All rights reserved.

Figure 60: CA Parity Flow Diagram

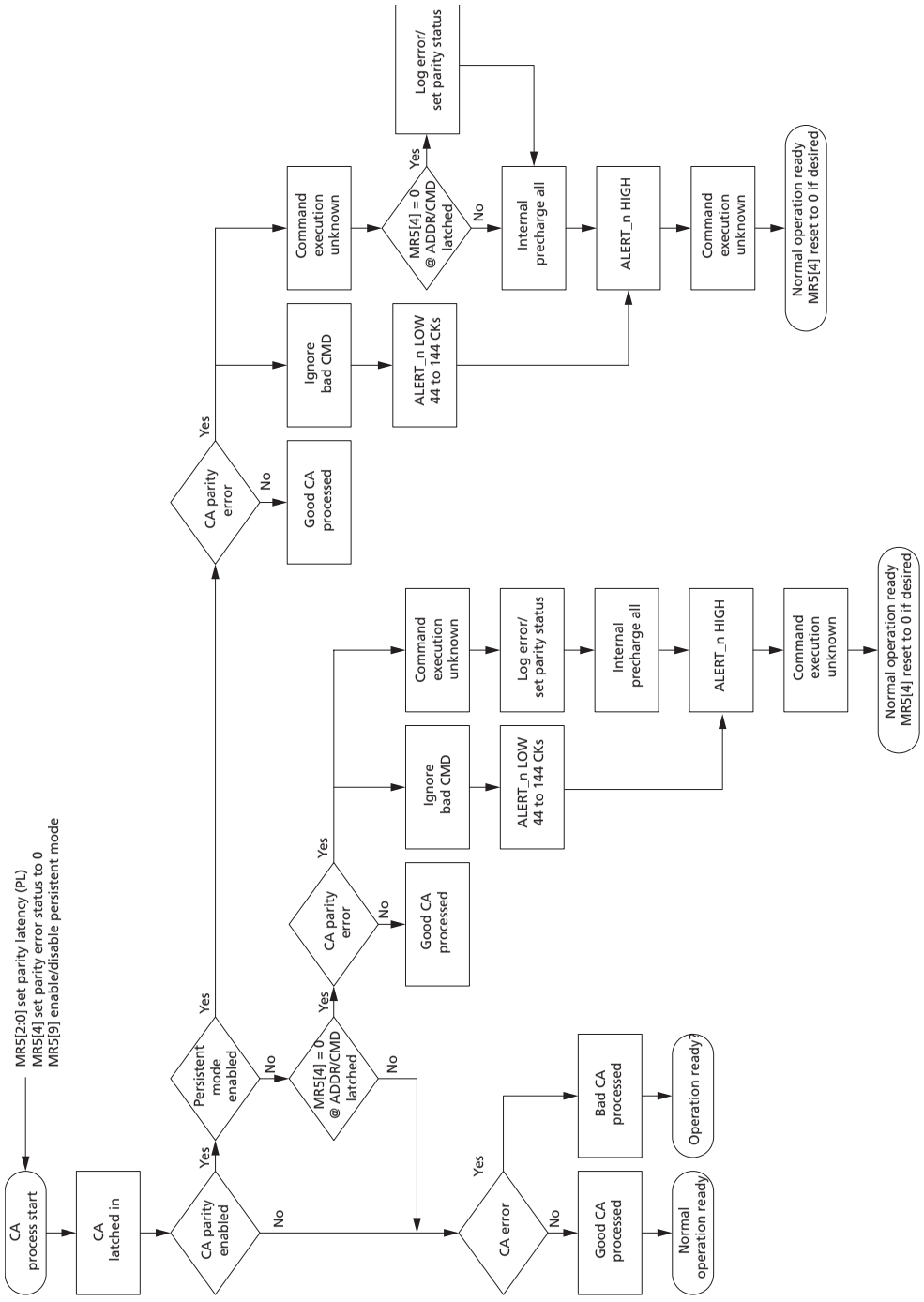

Micron Technology, Inc. reserves the right to change products or specifications without notice.
© 2018 Micron Technology, Inc. All rights reserved.

Per-DRAM Addressability

DDR4 allows programmability of a single, specific DRAM on a rank. As an example, this feature can be used to program different ODT or V_{REF} values on each DRAM on a given rank. Because per-DRAM addressability (PDA) mode may be used to program optimal V_{REF} for the DRAM, the data set up for first DQ0 transfer or the hold time for the last DQ0 transfer cannot be guaranteed. The DRAM may sample DQ0 on either the first falling or second rising DQS transfer edge. This supports a common implementation between BC4 and BL8 modes on the DRAM. The DRAM controller is required to drive DQ0 to a stable LOW or HIGH state during the length of the data transfer for BC4 and BL8 cases. Note, both fixed and on-the-fly (OTF) modes are supported for BC4 and BL8 during PDA mode.

1. Before entering PDA mode, write leveling is required.
   - BL8 or BC4 may be used.
2. Before entering PDA mode, the following MR settings are possible:
   - $R_{TT(Park)}$ MR5 A[8:6] = Enable
   - $R_{TT(NOM)}$ MR1 A[10:8] = Enable
3. Enable PDA mode using MR3 [4] = 1. (The default programed value of MR3[4] = 0.)
4. In PDA mode, all MRS commands are qualified with DQ0. The device captures DQ0 by using DQS signals. If the value on DQ0 is LOW, the DRAM executes the MRS command. If the value on DQ0 is HIGH, the DRAM ignores the MRS command. The controller can choose to drive all the DQ bits.
5. Program the desired DRAM and mode registers using the MRS command and DQ0.
6. In PDA mode, only MRS commands are allowed.
7. The MODE REGISTER SET command cycle time in PDA mode, AL + CWL + BL/2 - 0.5^{t}CK + ^{t}MRD_PDA + PL, is required to complete the WRITE operation to the mode register and is the minimum time required between two MRS commands.
8. Remove the device from PDA mode by setting MR3[4] = 0. (This command requires DQ0 = 0.)

Note: Removing the device from PDA mode will require programming the entire MR3 when the MRS command is issued. This may impact some PDA values programmed within a rank as the EXIT command is sent to the rank. To avoid such a case, the PDA enable/disable control bit is located in a mode register that does not have any PDA mode controls.

In PDA mode, the device captures DQ0 using DQS signals the same as in a normal WRITE operation; however, dynamic ODT is not supported. Extra care is required for the ODT setting. If $R_{TT(NOM)}$ MR1 [10:8] = enable, device data termination needs to be controlled by the ODT pin, and applies the same timing parameters (defined below).

Symbol	Parameter
DODTLon	Direct ODT turnon latency
DODTLoff	Direct ODT turn off latency
^{t}ADC	R_{TT} change timing skew
^{t}AONAS	Asynchronous $R_{TT(NOM)}$ turn-on delay
^{t}AOFAS	Asynchronous $R_{TT(NOM)}$ turn-off delay

Micron Technology, Inc. reserves the right to change products or specifications without notice.
© 2018 Micron Technology, Inc. All rights reserved.

Figure 61: PDA Operation Enabled, BL8

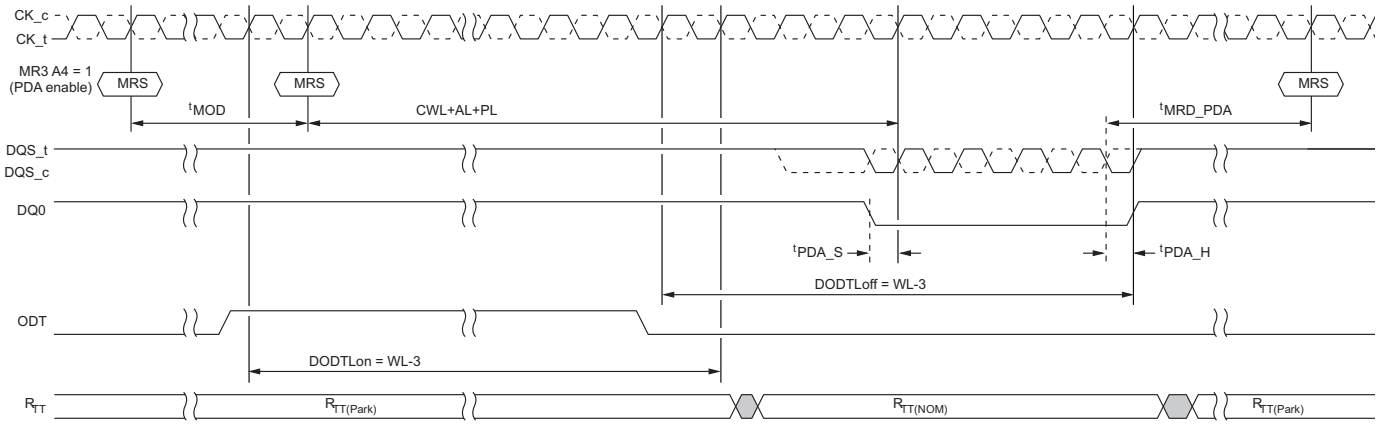

Note: 1. $R_{TT(Park)}$ = Enable; $R_{TT(NOM)}$ = Enable; WRITE preamble set = 2^{t}CK; and DLL = On.

Figure 62: PDA Operation Enabled, BC4

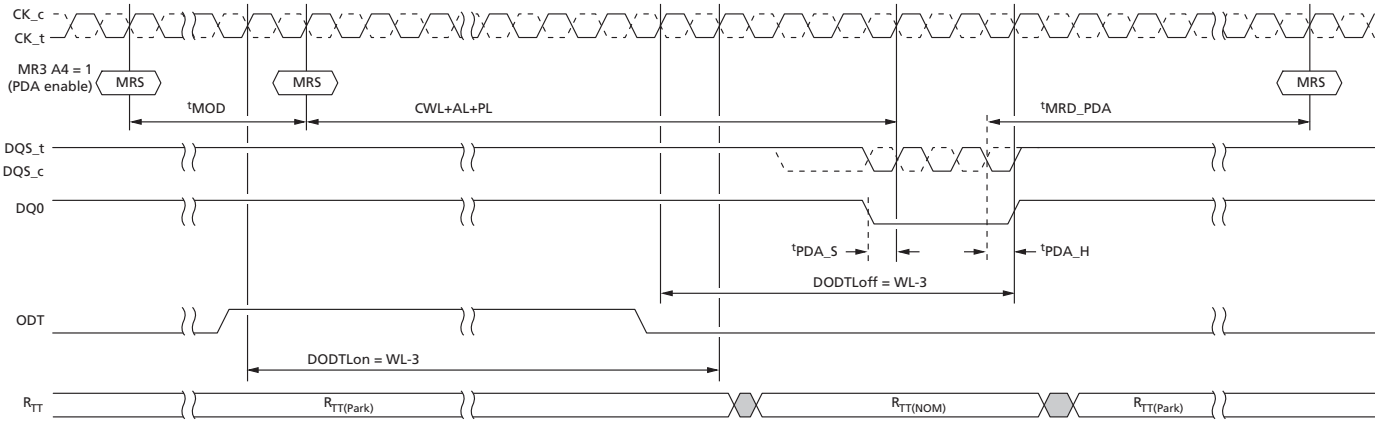

Note: 1. $R_{TT(Park)}$ = Enable; $R_{TT(NOM)}$ = Enable; WRITE preamble set = 2^{t}CK; and DLL = On.

Micron Technology, Inc. reserves the right to change products or specifications without notice.
© 2018 Micron Technology, Inc. All rights reserved.

Figure 63: MRS PDA Exit

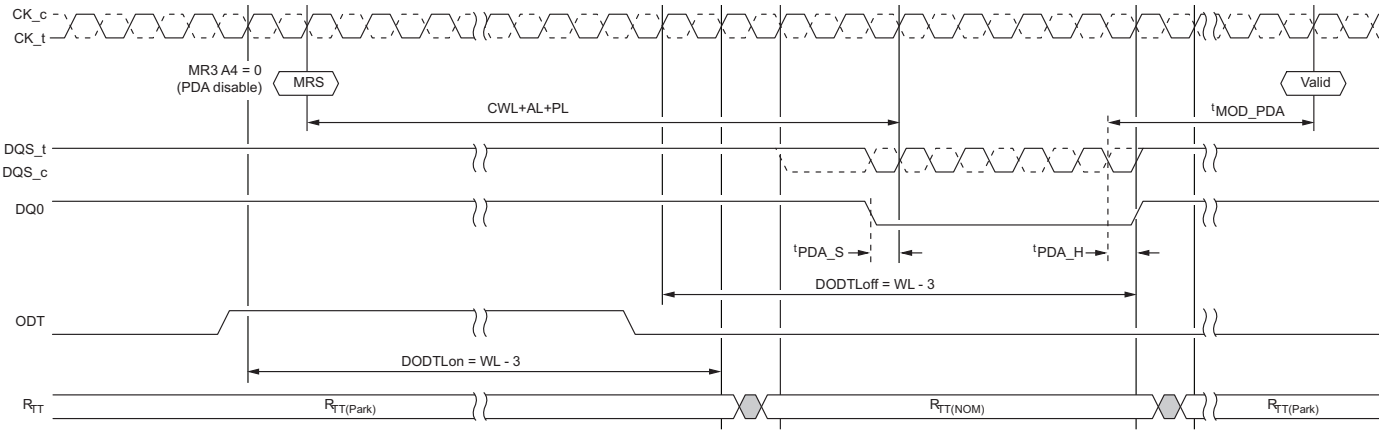

Note: 1. $R_{TT(Park)}$ = Enable; $R_{TT(NOM)}$ = Enable; WRITE preamble set = 2^{t}CK; and DLL = On.

Micron Technology, Inc. reserves the right to change products or specifications without notice.
© 2018 Micron Technology, Inc. All rights reserved.

V_{REFDQ} Calibration

The V_{REFDQ} level, which is used by the DRAM DQ input receivers, is internally generated. The DRAM V_{REFDQ} does not have a default value upon power-up and must be set to the desired value, usually via V_{REFDQ} calibration mode. If PDA or PPR modes (hPPR or sPPR) are used prior to V_{REFDQ} calibration, V_{REFDQ} should initially be set at the midpoint between the $V_{DD,max}$, and the LOW as determined by the driver and ODT termination selected with wide voltage swing on the input levels and setup and hold times of approximately 0.75UI. The memory controller is responsible for V_{REFDQ} calibration to determine the best internal V_{REFDQ} level. The V_{REFDQ} calibration is enabled/disabled via MR6[7], MR6[6] selects Range 1 (60% to 92.5% of V_{DDQ}) or Range 2 (45% to 77.5% of V_{DDQ}), and an MRS protocol using MR6[5:0] to adjust the V_{REFDQ} level up and down. MR6[6:0] bits can be altered using the MRS command if MR6[7] is enabled. The DRAM controller will likely use a series of writes and reads in conjunction with V_{REFDQ} adjustments to obtain the best V_{REFDQ}, which in turn optimizes the data eye.

The internal V_{REFDQ} specification parameters are voltage range, step size, V_{REF} step time, V_{REF} full step time, and V_{REF} valid level. The voltage operating range specifies the minimum required V_{REF} setting range for DDR4 SDRAM devices. The minimum range is defined by $V_{REFDQ,min}$ and $V_{REFDQ,max}$. As noted, a calibration sequence, determined by the DRAM controller, should be performed to adjust $V_{REFDQ}$and optimize the timing and voltage margin of the DRAM data input receivers. The internal V_{REFDQ} voltage value may not be exactly within the voltage range setting coupled with the V_{REF} set tolerance; the device must be calibrated to the correct internal V_{REFDQ} voltage.

Figure 64: V_{REFDQ} Voltage Range

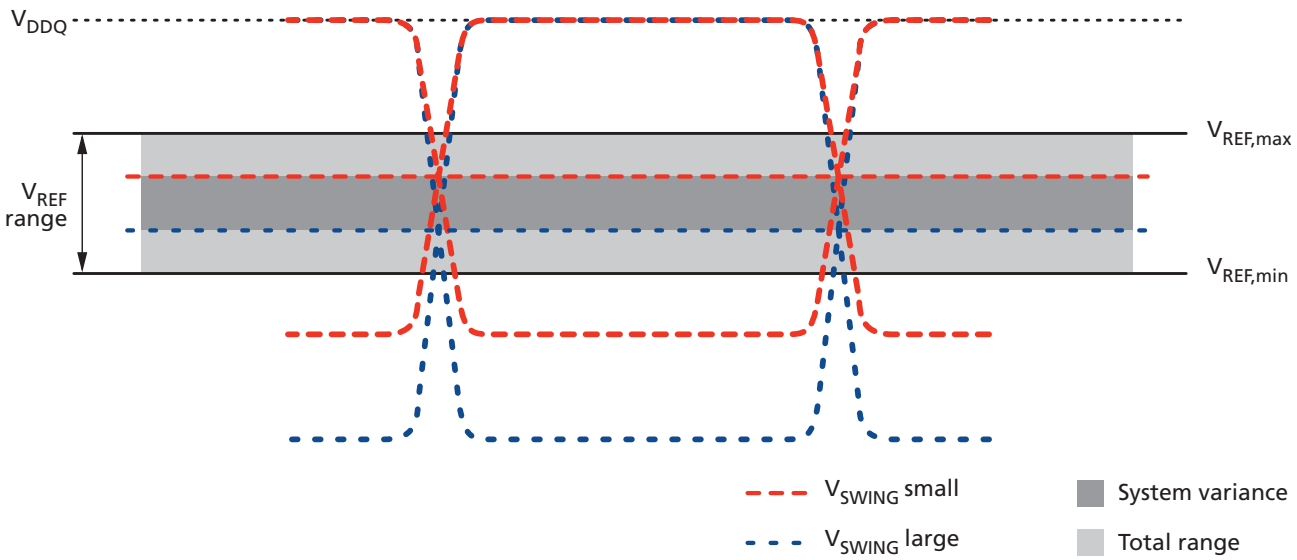

Micron Technology, Inc. reserves the right to change products or specifications without notice.
© 2018 Micron Technology, Inc. All rights reserved.

V_{REFDQ} Range and Levels

Table 37: V_{REFDQ} Range and Levels

MR6[5:0]	Range 1 MR6[6] 0	Range 2 MR6[6] 1	MR6[5:0]	Range 1 MR6[6] 0	Range 2 MR6[6] 1
00 0000	60.00%	45.00%	01 1010	76.90%	61.90%
00 0001	60.65%	45.65%	01 1011	77.55%	62.55%
00 0010	61.30%	46.30%	01 1100	78.20%	63.20%
00 0011	61.95%	46.95%	01 1101	78.85%	63.85%
00 0100	62.60%	47.60%	01 1110	79.50%	64.50%
00 0101	63.25%	48.25%	01 1111	80.15%	65.15%
00 0110	63.90%	48.90%	10 0000	80.80%	65.80%
00 0111	64.55%	49.55%	10 0001	81.45%	66.45%
00 1000	65.20%	50.20%	10 0010	82.10%	67.10%
00 1001	65.85%	50.85%	10 0011	82.75%	67.75%
00 1010	66.50%	51.50%	10 0100	83.40%	68.40%
00 1011	67.15%	52.15%	10 0101	84.05%	69.05%
00 1100	67.80%	52.80%	10 0110	84.70%	69.70%
00 1101	68.45%	53.45%	10 0111	85.35%	70.35%
00 1110	69.10%	54.10%	10 1000	86.00%	71.00%
00 1111	69.75%	54.75%	10 1001	86.65%	71.65%
01 0000	70.40%	55.40%	10 1010	87.30%	72.30%
01 0001	71.05%	56.05%	10 1011	87.95%	72.95%
01 0010	71.70%	56.70%	10 1100	88.60%	73.60%
01 0011	72.35%	57.35%	10 1101	89.25%	74.25%
01 0100	73.00%	58.00%	10 1110	89.90%	74.90%
01 0101	73.65%	58.65%	10 1111	90.55%	75.55%
01 0110	74.30%	59.30%	11 0000	91.20%	76.20%
01 0111	74.95%	59.95%	11 0001	91.85%	76.85%
01 1000	75.60%	60.60%	11 0010	92.50%	77.50%
01 1001	76.25%	61.25%	11 0011 to 11 1111 = Reserved		

V_{REFDQ} Step Size

The V_{REF} step size is defined as the step size between adjacent steps. V_{REF} step size ranges from 0.5% V_{DDQ} to 0.8% V_{DDQ}. However, for a given design, the device has one value for V_{REF} step size that falls within the range.

The V_{REF} set tolerance is the variation in the V_{REF} voltage from the ideal setting. This accounts for accumulated error over multiple steps. There are two ranges for V_{REF} set tolerance uncertainty. The range of V_{REF} set tolerance uncertainty is a function of number of steps *n*.

The V_{REF} set tolerance is measured with respect to the ideal line, which is based on the MIN and MAX V_{REF} value endpoints for a specified range. The internal V_{REFDQ} voltage value may not be exactly within

Micron Technology, Inc. reserves the right to change products or specifications without notice.
© 2018 Micron Technology, Inc. All rights reserved.

the voltage range setting coupled with the V_{REF} set tolerance; the device must be calibrated to the correct internal V_{REFDQ} voltage.

Figure 65: Example of V_{REF} Set Tolerance and Step Size

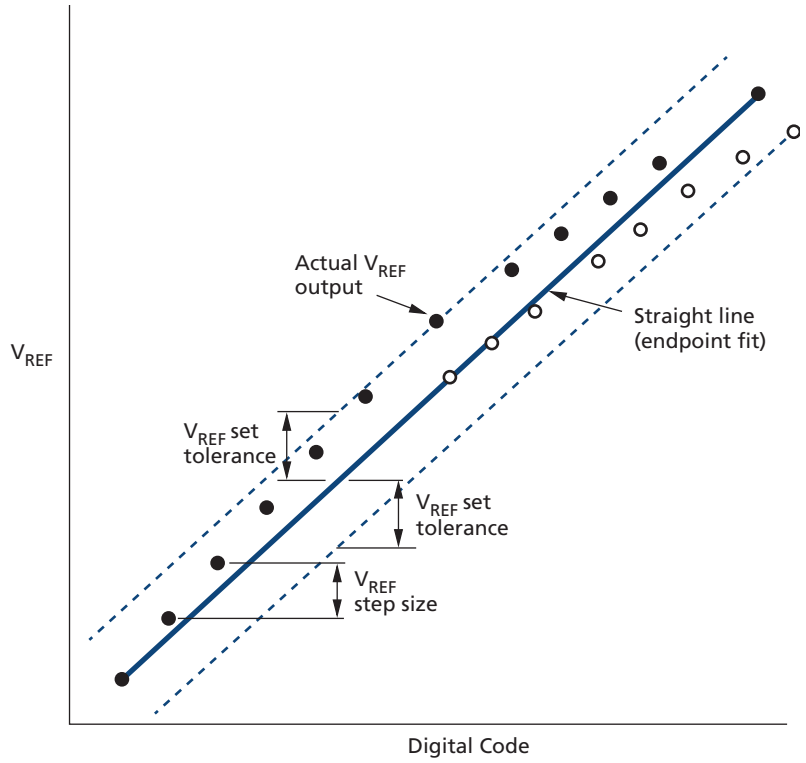

Note: 1. Maximum case shown.

V_{REFDQ} Increment and Decrement Timing

The V_{REF} increment/decrement step times are defined by $V_{REF,time}$. $V_{REF,time}$ is defined from t0 to t1, where t1 is referenced to the V_{REF} voltage at the final DC level within the V_{REF} valid tolerance (V_{REF,val_tol}). The V_{REF} valid level is defined by $V_{REF,val}$ tolerance to qualify the step time t1. This parameter is used to insure an adequate RC time constant behavior of the voltage level change after any V_{REF} increment/decrement adjustment.

Micron Technology, Inc. reserves the right to change products or specifications without notice.
© 2018 Micron Technology, Inc. All rights reserved.

Figure 66: V_{REFDQ} Timing Diagram for $V_{REF,time}$ Parameter

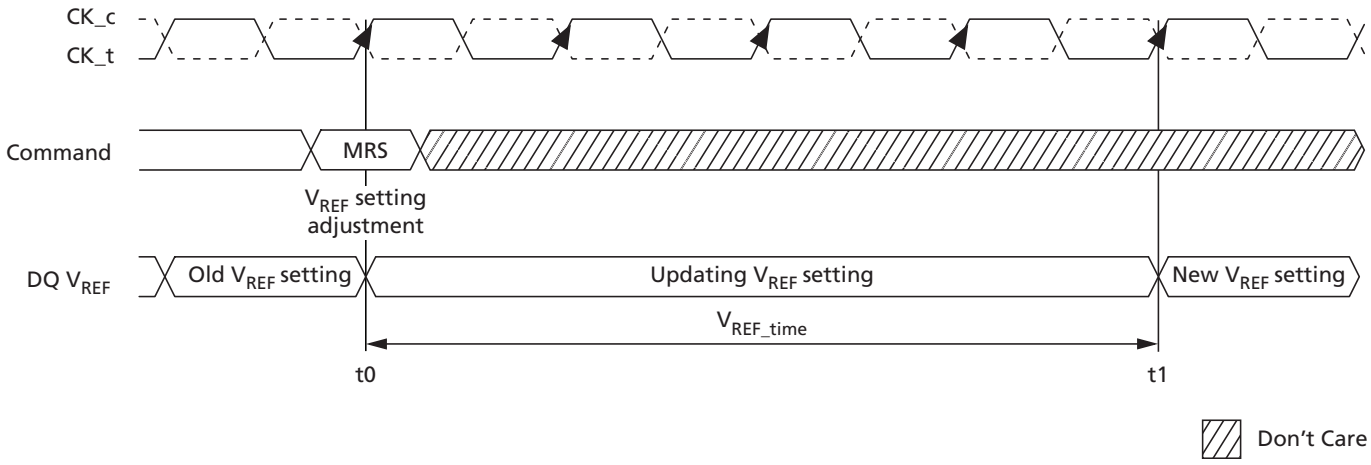

Note: 1. t0 is referenced to the MRS command clock
t1 is referenced to $V_{REF,tol}$

V_{REFDQ} calibration mode is entered via an MRS command, setting MR6[7] to 1 (0 disables V_{REFDQ} calibration mode) and setting MR6[6] to either 0 or 1 to select the desired range (MR6[5:0] are "Don't Care"). After V_{REFDQ} calibration mode has been entered, V_{REFDQ} calibration mode legal commands may be issued once ^{t}VREFDQE has been satisfied. Legal commands for V_{REFDQ} calibration mode are ACT, WR, WRA, RD, RDA, PRE, DES, and MRS to set V_{REFDQ} values, and MRS to exit V_{REFDQ} calibration mode. Also, after V_{REFDQ} calibration mode has been entered, "dummy" WRITE commands are allowed prior to adjusting the V_{REFDQ} value the first time V_{REFDQ} calibration is performed after initialization.

Setting V_{REFDQ} values requires MR6[7] be set to 1 and MR6[6] be unchanged from the initial range selection; MR6[5:0] may be set to the desired V_{REFDQ} values. If MR6[7] is set to 0, MR6[6:0] are not written. $V_{REF,time-short}$ or $V_{REF,time-long}$ must be satisfied after each MR6 command to set V_{REFDQ} value before the internal V_{REFDQ} value is valid.

If PDA mode is used in conjunction with V_{REFDQ} calibration, the PDA mode requirement that only MRS commands are allowed while PDA mode is enabled is not waived. That is, the only V_{REFDQ} calibration mode legal commands noted above that may be used are the MRS commands: MRS to set V_{REFDQ} values and MRS to exit V_{REFDQ} calibration mode.

The last MR6[6:0] setting written to MR6 prior to exiting V_{REFDQ} calibration mode is the range and value used for the internal V_{REFDQ} setting. V_{REFDQ} calibration mode may be exited when the DRAM is in idle state. After the MRS command to exit V_{REFDQ} calibration mode has been issued, DES must be issued until ^{t}VREFDQX has been satisfied where any legal command may then be issued. V_{REFDQ} setting should be updated if the die temperature changes too much from the calibration temperature.

The following are typical script when applying the above rules for V_{REFDQ} calibration routine when performing V_{REFDQ} calibration in Range 1:

- MR6[7:6]10 [5:0]XXXXXXX.
  - Subsequent legal commands while in V_{REFDQ} calibration mode: ACT, WR, WRA, RD, RDA, PRE, DES, and MRS (to set V_{REFDQ} values and exit V_{REFDQ} calibration mode).
- All subsequent V_{REFDQ} calibration MR setting commands are MR6[7:6]10 [5:0]VVVVVV.
  - "VVVVVV" are desired settings for V_{REFDQ}.

Micron Technology, Inc. reserves the right to change products or specifications without notice.
© 2018 Micron Technology, Inc. All rights reserved.

- Issue ACT/WR/RD looking for pass/fail to determine V_{CENT} (midpoint) as needed.
- To exit V_{REFDQ} calibration, the last two V_{REFDQ} calibration MR commands are:
  - MR6[7:6]10 [5:0]VVVVVV* where VVVVVV* = desired value for V_{REFDQ}.
  - MR6[7]0 [6:0]XXXXXXX to exit V_{REFDQ} calibration mode.

The following are typical script when applying the above rules for V_{REFDQ} calibration routine when performing V_{REFDQ} calibration in Range 2:

- MR6[7:6]11 [5:0]XXXXXXX.
  - Subsequent legal commands while in V_{REFDQ} calibration mode: ACT, WR, WRA, RD, RDA, PRE, DES, and MRS (to set V_{REFDQ} values and exit V_{REFDQ} calibration mode).
- All subsequent V_{REFDQ} calibration MR setting commands are MR6[7:6]11 [5:0]VVVVVV.
  - "VVVVVV" are desired settings for V_{REFDQ}.
- Issue ACT/WR/RD looking for pass/fail to determine V_{CENT} (midpoint) as needed.
- To exit V_{REFDQ} calibration, the last two V_{REFDQ} calibration MR commands are:
  - MR6[7:6]11 [5:0]VVVVVV* where VVVVVV* = desired value for V_{REFDQ}.
  - MR6[7]0 [6:0]XXXXXXX to exit V_{REFDQ} calibration mode.

Note: Range may only be set or changed when entering V_{REFDQ} calibration mode; changing range while in or exiting V_{REFDQ} calibration mode is illegal.

Figure 67: V_{REFDQ} Training Mode Entry and Exit Timing Diagram

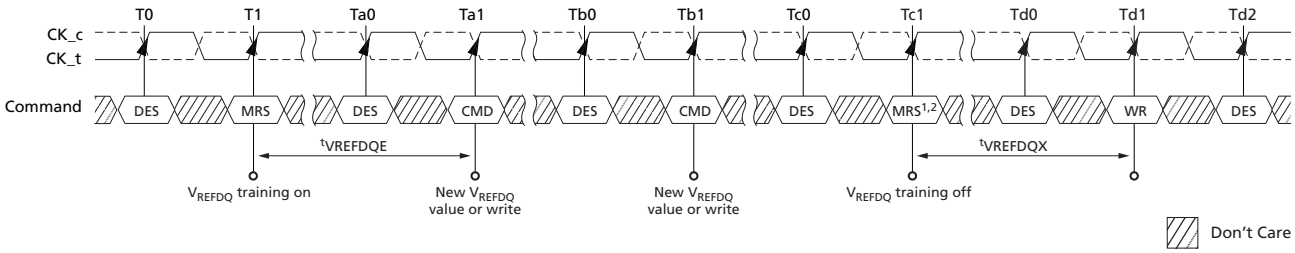

Notes: 1. New V_{REFDQ} values are not allowed with an MRS command during calibration mode entry.
2. Depending on the step size of the latest programmed V_{REF} value, V_{REF} must be satisfied before disabling V_{REFDQ} training mode.

Micron Technology, Inc. reserves the right to change products or specifications without notice.
© 2018 Micron Technology, Inc. All rights reserved.

Figure 68: V_{REF} Step: Single Step Size Increment Case

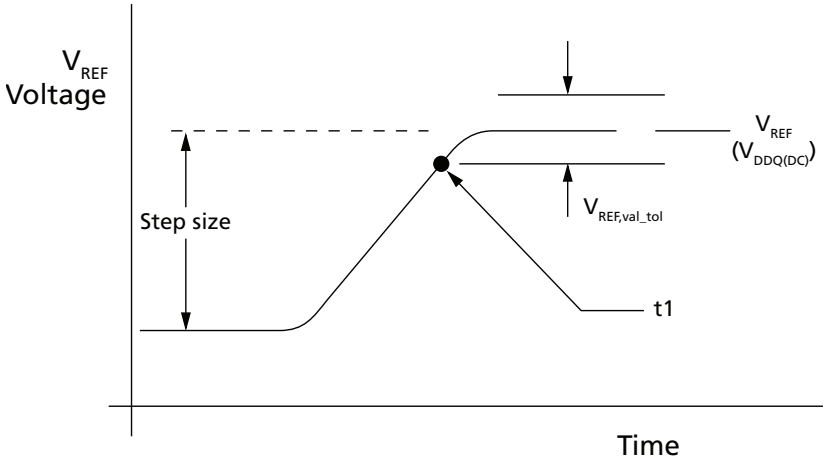

Figure 69: V_{REF} Step: Single Step Size Decrement Case

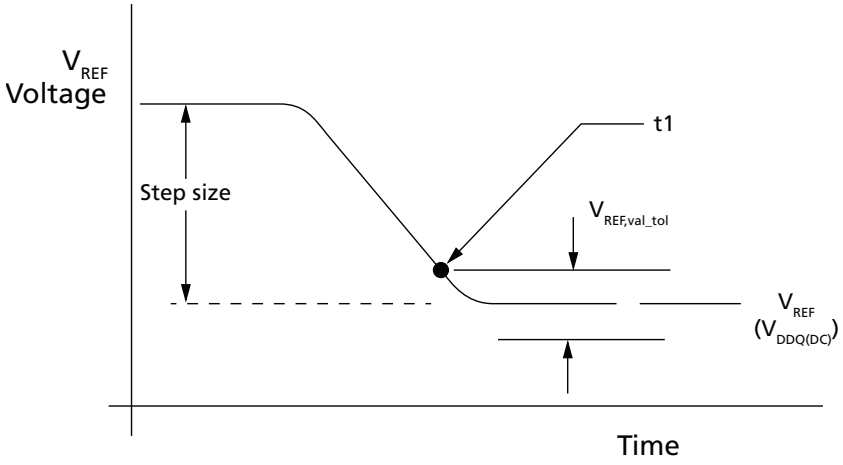

Micron Technology, Inc. reserves the right to change products or specifications without notice.
© 2018 Micron Technology, Inc. All rights reserved.

Figure 70: V_{REF} Full Step: From $V_{REF,min}$ to $V_{REF,max}$Case

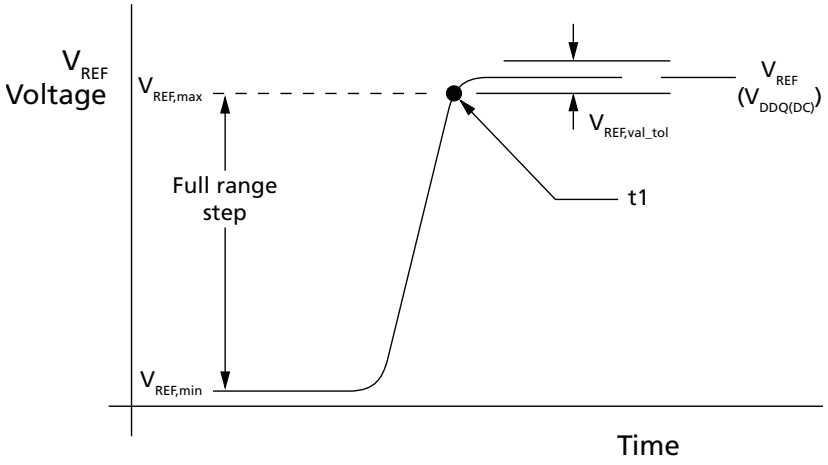

Figure 71: V_{REF} Full Step: From $V_{REF,max}$ to $V_{REF,min}$Case

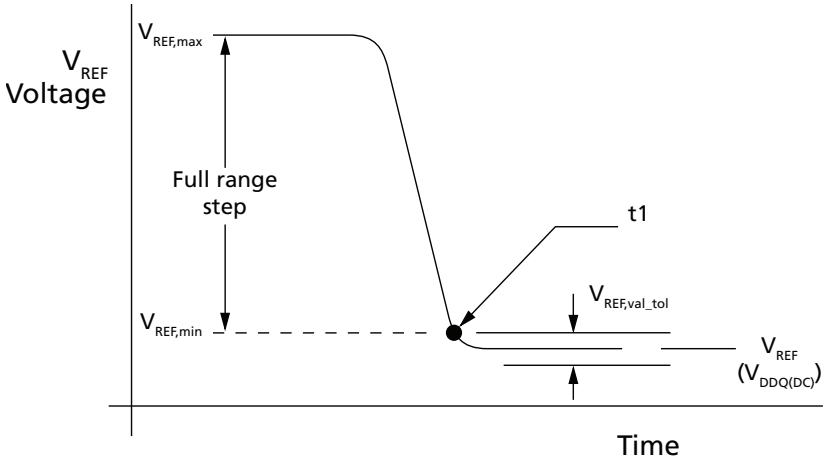

V_{REFDQ} Target Settings

The V_{REFDQ} initial settings are largely dependant on the ODT termination settings. The table below shows all of the possible initial settings available for V_{REFDQ} training; it is unlikely the lower ODT settings would be used in most cases.

Table 38: V_{REFDQ} Settings (V_{DDQ} = 1.2V)

R_{ON}	ODT	Vx – V_{IN} LOW (mV)	V_{REFDQ} (mv)	V_{REFDQ} (%V_{DDQ})
34 ohm	34 ohm	600	900	75%
	40 ohm	550	875	73%
	48 ohm	500	850	71%
	60 ohm	435	815	68%
	80 ohm	360	780	65%
	120 ohm	265	732	61%
	240 ohm	150	675	56%

Micron Technology, Inc. reserves the right to change products or specifications without notice.
© 2018 Micron Technology, Inc. All rights reserved.

Table 38: V_{REFDQ} Settings (V_{DDQ} = 1.2V)

R_{ON}	ODT	Vx – V_{IN} LOW (mV)	V_{REFDQ} (mv)	V_{REFDQ} (%V_{DDQ})
48 ohm	34 ohm	700	950	79%
	40 ohm	655	925	77%
	48 ohm	600	900	75%
	60 ohm	535	865	72%
	80 ohm	450	825	69%
	120 ohm	345	770	64%
	240 ohm	200	700	58%

Figure 72: V_{REFDQ} Equivalent Circuit

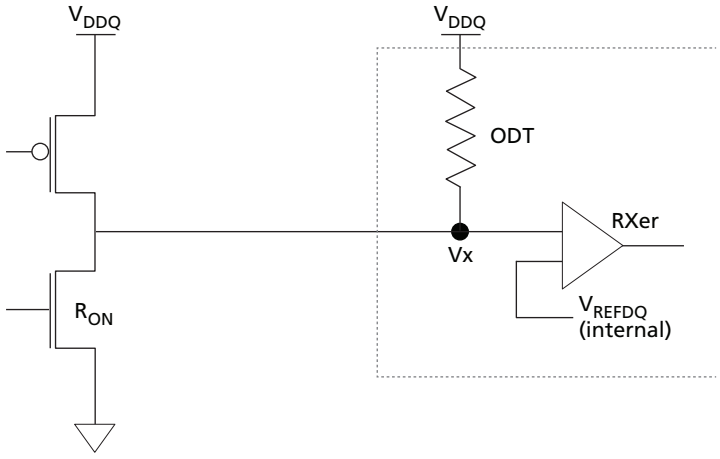

Micron Technology, Inc. reserves the right to change products or specifications without notice.
© 2018 Micron Technology, Inc. All rights reserved.

Connectivity Test Mode

Connectivity test (CT) mode is similar to boundary scan testing but is designed to significantly speed up the testing of electrical continuity of pin interconnections between the device and the memory controller on the PC boards. Designed to work seamlessly with any boundary scan device, CT mode is supported in all ×4, ×8, and ×16 non-3DS devices (JEDEC states CT mode for ×4 and ×8 is not required on 4Gb and is an optional feature on 8Gb and above). 3DS devices do not support CT mode and the TEN pin should be considered RFU maintained LOW at all times.

Contrary to other conventional shift-register-based test modes, where test patterns are shifted in and out of the memory devices serially during each clock, the CT mode allows test patterns to be entered on the test input pins in parallel and the test results to be extracted from the test output pins of the device in parallel. These two functions are also performed at the same time, significantly increasing the speed of the connectivity check. When placed in CT mode, the device appears as an asynchronous device to the external controlling agent. After the input test pattern is applied, the connectivity test results are available for extraction in parallel at the test output pins after a fixed propagation delay time.

Note: A reset of the device is required after exiting CT mode (see RESET and Initialization Procedure).

Pin Mapping

Only digital pins can be tested using the CT mode. For the purposes of a connectivity check, all the pins used for digital logic in the device are classified as one of the following types:

- **Test enable (TEN):** When asserted HIGH, this pin causes the device to enter CT mode. In CT mode, the normal memory function inside the device is bypassed and the I/O pins appear as a set of test input and output pins to the external controlling agent. Additionally, the device will set the internal V_{REFDQ} to V_{DDQ} × 0.5 during CT mode (this is the only time the DRAM takes direct control over setting the internal V_{REFDQ}). The TEN pin is dedicated to the connectivity check function and will not be used during normal device operation.
- **Chip select (CS_n):** When asserted LOW, this pin enables the test output pins in the device. When de-asserted, these output pins will be High-Z. The CS_n pin in the device serves as the CS_n pin in CT mode.
- **Test input:** A group of pins used during normal device operation designated as test input pins. These pins are used to enter the test pattern in CT mode.
- **Test output:** A group of pins used during normal device operation designated as test output pins. These pins are used for extraction of the connectivity test results in CT mode.
- **RESET_n:** This pin must be fixed high level during CT mode, as in normal function.

Micron Technology, Inc. reserves the right to change products or specifications without notice.
© 2018 Micron Technology, Inc. All rights reserved.

Table 39: Connectivity Mode Pin Description and Switching Levels

CT Mode Pins		Pin Name During Normal Memory Operation	Switching Level	Notes
Test enable		TEN	CMOS (20%/80% V_{DD})	1, 2
Chip select		CS_n	V_{REFCA} ±200mV	3
Test input	A	BA[1:0], BG[1:0], A[9:0], A10/AP, A11, A12/BC_n, A13, WE_n/A14, CAS_n/A15, RAS_n/A16, A17, CKE, ACT_n, ODT, CLK_t, CLK_c, PAR	V_{REFCA} ±200mV	3
	B	LDM_n/LDBI_n, UDM_n/UDBI_n; DM_n/DBI_n	V_{REFDQ} ±200mV	4
	C	ALERT_n	CMOS (20%/80% V_{DD})	2, 5
	D	RESET_n	CMOS (20%/80% V_{DD})	2
Test output		DQ[15:0], UDQS_t, UDQS_c, LDQS_t, LDQS_c; DQS_t, DQS_c	V_{TT} ±100mV	6

Notes: 1. TEN: Connectivity test mode is active when TEN is HIGH and inactive when TEN is LOW. TEN must be LOW during normal operation.
2. CMOS is a rail-to-rail signal with DC HIGH at 80% and DC LOW at 20% of V_{DD} (960mV for DC HIGH and 240mV for DC LOW.)
3. V_{REFCA} should be $V_{DD}/2$.
4. V_{REFDQ} should be $V_{DDQ}/2$.
5. ALERT_n switching level is not a final setting.
6. V_{TT} should be set to $V_{DD}/2$.

Minimum Terms Definition for Logic Equations

The test input and output pins are related by the following equations, where INV denotes a logical inversion operation and XOR a logical exclusive OR operation:

MT0 = XOR (A1, A6, PAR)
MT1 = XOR (A8, ALERT_n, A9)
MT2 = XOR (A2, A5, A13) or XOR (A2, A5, A13, A17)
MT3 = XOR (A0, A7, A11)
MT4 = XOR (CK_c, ODT, CAS_n/A15)
MT5 = XOR (CKE, RAS_n/A16, A10/AP)
MT6 = XOR (ACT_n, A4, BA1)
MT7 = ×16: XOR (DMU_n/DBIU_n, DML_n/DBIL_n, CK_t)
= x8: XOR (BG1, DML_n/DBIL_n, CK_t)
= x4: XOR (BG1, CK_t)
MT8 = XOR (WE_n/A14, A12 / BC, BA0)
MT9 = XOR (BG0, A3, RESET_n and TEN)

Logic Equations for a x4 Device

DQ0 = XOR (MT0, MT1)
DQ1 = XOR (MT2, MT3)
DQ2 = XOR (MT4, MT5)
DQ3 = XOR (MT6, MT7)
DQS_t = MT8
DQS_c = MT9

Micron Technology, Inc. reserves the right to change products or specifications without notice.
© 2018 Micron Technology, Inc. All rights reserved.

Logic Equations for a x8 Device

DQ0 = MT0	DQ5 = MT5
DQ1 = MT1	DQ6 = MT6
DQ2 = MT2	DQ7 = MT7
DQ3 = MT3	DQS_t = MT8
DQ4 = MT4	DQS_c = MT9

Logic Equations for a x16 Device

DQ0 = MT0	DQ10 = INV DQ2
DQ1 = MT1	DQ11 = INV DQ3
DQ2 = MT2	DQ12 = INV DQ4
DQ3 = MT3	DQ13 = INV DQ5
DQ4 = MT4	DQ14 = INV DQ6
DQ5 = MT5	DQ15 = INV DQ7
DQ6 = MT6	LDQS_t = MT8
DQ7 = MT7	LDQS_c = MT9
DQ8 = INV DQ0	UDQS_t = INV LDQS_t
DQ9 = INV DQ1	UDQS_c = INV LDQS_c

CT Input Timing Requirements

Prior to the assertion of the TEN pin, all voltage supplies, including V_{REFCA}, must be valid and stable and RESET_n registered high prior to entering CT mode. Upon the assertion of the TEN pin HIGH with RESET_n, CKE, and CS_n held HIGH; CLK_t, CLK_c, and CKE signals become test inputs within ^{t}CTECT_Valid. The remaining CT inputs become valid ^{t}CT_Enable after TEN goes HIGH when CS_n allows input to begin sampling, provided inputs were valid for at least ^{t}CT_Valid. While in CT mode, refresh activities in the memory arrays are not allowed; they are initiated either externally (auto refresh) or internally (self refresh).

The TEN pin may be asserted after the DRAM has completed power-on. After the DRAM is initialized and V_{REFDQ} is calibrated, CT mode may no longer be used. The TEN pin may be de-asserted at any time in CT mode. Upon exiting CT mode, the states and the integrity of the original content of the memory array are unknown. A full reset of the memory device is required.

After CT mode has been entered, the output signals will be stable within ^{t}CT_Valid after the test inputs have been applied as long as TEN is maintained HIGH and CS_n is maintained LOW.

Micron Technology, Inc. reserves the right to change products or specifications without notice.
© 2018 Micron Technology, Inc. All rights reserved.

Figure 73: Connectivity Test Mode Entry

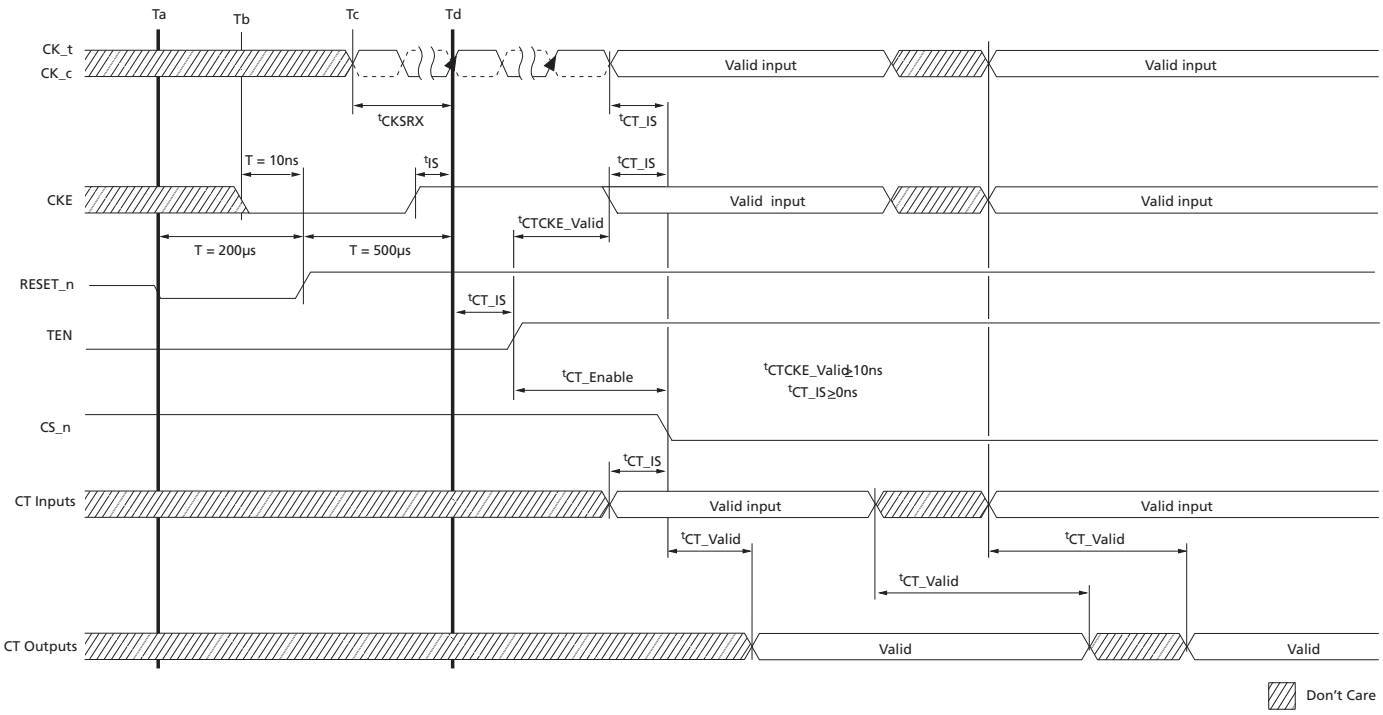

Micron Technology, Inc. reserves the right to change products or specifications without notice.
© 2018 Micron Technology, Inc. All rights reserved.

Excessive Row Activation

Rows can be accessed a limited number of times within a certain time period before adjacent rows require refresh. The maximum activate count (MAC) is the maximum number of activates that a single row can sustain within a time interval of equal to or less than the maximum activate window (^{t}MAW) before the adjacent rows need to be refreshed, regardless of how the activates are distributed over ^{t}MAW.

Micron's DDR4 devices automatically perform a type of TRR mode in the background and provide an MPR Page 3 MPR3[3:0] of 1000, indicating there is no restriction to the number of ACTIVATE commands to a given row in a refresh period provided DRAM timing specifications are not violated. However, specific attempts to by-pass TRR may result in data disturb.

Table 40: MAC Encoding of MPR Page 3 MPR3

[7]	[6]	[5]	[4]	[3]	[2]	[1]	[0]	MAC	Comments
x	x	x	x	0	0	0	0	Untested	The device has not been tested for MAC.
x	x	x	x	0	0	0	1	^{t}MAC = 700K	
x	x	x	x	0	0	1	0	^{t}MAC = 600K	
x	x	x	x	0	0	1	1	^{t}MAC = 500K	
x	x	x	x	0	1	0	0	^{t}MAC = 400K	
x	x	x	x	0	1	0	1	^{t}MAC = 300K	
x	x	x	x	0	1	1	0	Reserved	
x	x	x	x	0	1	1	1	^{t}MAC = 200K	
x	x	x	x	1	0	0	0	Unlimited	There is no restriction to the number of ACTIVATE commands to a given row in a refresh period provided DRAM timing specifications are not violated.
x	x	x	x	1	0	0	1	Reserved	
x	x	x	x	:	:	:	:	Reserved	
x	x	x	x	1	1	1	1	Reserved	

Notes: 1. MAC encoding in MPR Page 3 MPR3.

Micron Technology, Inc. reserves the right to change products or specifications without notice.
© 2018 Micron Technology, Inc. All rights reserved.

Post Package Repair

Post Package Repair

JEDEC defines two modes of Post Package Repair (PPR): soft Post Package Repair (sPPR) and hard Post Package Repair (hPPR). sPPR is non-persistent so the repair row maybe altered; that is, sPPR is NOT a permanent repair and even though it will repair a row, the repair can be reversed, reassigned via another sPPR, or made permanent via hPPR. Hard Post Package Repair is persistent so once the repair row is assigned for a hPPR address, further PPR commands to a previous hPPR section should not be performed, that is, hPPR is a permanent repair; once repaired, it cannot be reversed. The controller provides the failing row address in the hPPR/sPPR sequence to the device to perform the row repair. hPPR Mode and sPPR Mode may not be enabled at the same time.

JEDEC states hPPR is optional for 4Gb and sPPR is optional for 4Gb and 8Gb parts however Micron 4Gb and 8Gb DDR4 DRAMs should have both sPPR and hPPR support. The hPPR support is identified via an MPR read from MPR Page 2, MPR0[7] and sPPR support is identified via an MPR read from MPR Page 2, MPR0[6].

The JEDEC minimum support requirement for DDR4 PPR (hPPR or sPPR) is to provide one row of repair per bank group (BG), x4/x8 have 4 BG and x16 has 2 BG; this is a total of 4 repair rows available on x4/x8 and 2 repair rows available on x16. Micron PPR support exceeds the JEDEC minimum requirements; Micron DDR4 DRAMs have at least one row of repair for each bank which is essentially 4 row repairs per BG for a total of 16 repair rows for x4 and x8 and 8 repair rows for x16; a 4x increase in repair rows.

JEDEC requires the user to have all sPPR row repair addresses reset and cleared prior to enabling hPPR Mode. Micron DDR4 PPR does not have this restriction, the existing sPPR row repair addresses are not required to be cleared prior to entering hPPR mode. Each bank in a BG is PPR independent: sPPR or hPPR issued to a bank will not alter a sPPR row repair existing in a different bank.

sPPR followed by sPPR to same bank

When PPR is issued to a bank for the first time and is a sPPR command, the repair row will be a sPPR. When a subsequent sPPR is issued to the same bank, the previous sPPR repair row will be cleared and used for the subsequent sPPR address as the sPPR operation is non-persistent.

sPPR followed by hPPR to same bank

When a PPR is issued to a bank for the first time and is a sPPR command, the repair row will be a sPPR. When a subsequent hPPR is issued to the same bank, the initial sPPR repair row will be cleared and used for the hPPR address[1]. If a further subsequent PPR (hPPR or sPPR) is issued to the same bank, the further subsequent PPR (hPPR or sPPR) repair row will not clear or overwrite the previous hPPR address as the hPPR operation is persistent.

hPPR followed by hPPR or sPPR to same bank

When a PPR is issued to a bank for the first time and is a hPPR command, the repair row will be a hPPR. When a subsequent PPR (hPPR or sPPR) is issued to the same bank, the subsequent PPR (hPPR or sPPR) repair row will not clear or overwrite the initial hPPR address as the initial hPPR is persistent.

Note: Newer Micron DDR4 designs may not guarantee that an sPPR followed by an hPPR to the same bank will result the same repair row being used. Contact factory for more information.

Hard Post Package Repair

All banks must be precharged and idle. DBI and CRC modes must be disabled. Both sPPR and hPPR must be disabled. sPPR is disabled with MR4[5] = 0. hPPR is disabled with MR4[13] = 0, which is the

Micron Technology, Inc. reserves the right to change products or specifications without notice.
© 2018 Micron Technology, Inc. All rights reserved.

normal state, and hPPR is enabled with MR4 [13]= 1, which is the hPPR enabled state. There are two forms of hPPR mode. Both forms of hPPR have the same entry requirement as defined in the sections below. The first command sequence uses a WRA command and supports data retention with a REFRESH operation except for the bank containing the row that is being repaired; JEDEC has relaxed this requirement and allows BA[0] to be a Don't Care regarding the banks which are not required to maintain data a REFRESH operation during hPPR. The second command sequence uses a WR command (a REFRESH operation can't be performed in this command sequence). The second command sequence doesn't support data retention for the target DRAM.

hPPR Row Repair - Entry

As stated above, all banks must be precharged and idle. DBI and CRC modes must be disabled, and all timings must be followed as shown in the timing diagram that follows.

All other commands except those listed in the following sequences are illegal.

1. Issue MR4[13] 1 to enter hPPR mode enable.
   a) All DQ are driven HIGH.
2. Issue four consecutive guard key commands (shown in the table below) to MR0 with each command separated by ^{t}MOD. The PPR guard key settings are the same whether performing sPPR or hPPR mode.
   a) Any interruption of the key sequence by other commands, such as ACT, WR, RD, PRE, REF, ZQ, and NOP, are not allowed.
   b) If the guard key bits are not entered in the required order or interrupted with other MR commands, hPPR will not be enabled, and the programming cycle will result in a NOP.
   c) When the hPPR entry sequence is interrupted and followed by ACT and WR commands, these commands will be conducted as normal DRAM commands.
   d) JEDEC allows A6:0 to be Don't Care on 4Gb and 8Gb devices from a supplier perspective and the user should rely on vendor datasheet.

Table 41: PPR MR0 Guard Key Settings

MR0	BG1:0	BA1:0	A17:12	A11	A10	A9	A8	A7	A6:0
First guard key	0	0	xxxxxx	1	1	0	0	1	1111111
Second guard key	0	0	xxxxxx	0	1	1	1	1	1111111
Third Guard key	0	0	xxxxxx	1	0	1	1	1	1111111
Fourth guard key	0	0	xxxxxx	0	0	1	1	1	1111111

hPPR Row Repair – WRA Initiated (REF Commands Allowed)

1. Issue an ACT command with failing BG and BA with the row address to be repaired.
2. Issue a WRA command with BG and BA of failing row address.
   a) The address must be at valid levels, but the address is Don't Care.
3. All DQ of the target DRAM should be driven LOW for 4*n*CK (bit 0 through bit 7) after WL (WL = CWL + AL + PL) in order for hPPR to initiate repair.
   a) Repair **will be** initiated to the target DRAM only if all DQ during bit 0 through bit 7 are LOW. The bank under repair does not get the REFRESH command applied to it.
   b) Repair **will not be** initiated to the target DRAM if any DQ during bit 0 through bit 7 is HIGH.
      i) JEDEC states: All DQs of target DRAM should be LOW for 4^{t}CK. If HIGH is driven to all DQs of a DRAM consecutively for equal to or longer than 2^{t}CK, then DRAM does not conduct hPPR

Micron Technology, Inc. reserves the right to change products or specifications without notice.
© 2018 Micron Technology, Inc. All rights reserved.

and retains data if REF command is properly issued; if all DQs are neither LOW for 4^{t}CK nor HIGH for equal to or longer than 2^{t}CK, then hPPR mode execution is unknown.

c) DQS should function normally.

4. REF command may be issued anytime after the WRA command followed by WL + 4*n*CK + ^{t}WR + ^{t}RP.
   a) Multiple REF commands are issued at a rate of ^{t}REFI or ^{t}REFI/2, however back-to-back REF commands must be separated by at least ^{t}REFI/4 when the DRAM is in hPPR mode.
   b) All banks except the bank under repair will perform refresh.
5. Issue PRE after ^{t}PGM time so that the device can repair the target row during ^{t}PGM time.
   a) Wait ^{t}PGM_Exit after PRE to allow the device to recognize the repaired target row address.
6. Issue MR4[13] 0 command to hPPR mode disable.
   a) Wait ^{t}PGMPST for hPPR mode exit to complete.
   b) After ^{t}PGMPST has expired, any valid command may be issued.

The entire sequence from hPPR mode enable through hPPR mode disable may be repeated if more than one repair is to be done.

After completing hPPR mode, MR0 must be re-programmed to a prehPPR mode state if the device is to be accessed.

After hPPR mode has been exited, the DRAM controller can confirm if the target row was repaired correctly by writing data into the target row and reading it back.

Figure 74: hPPR WRA – Entry

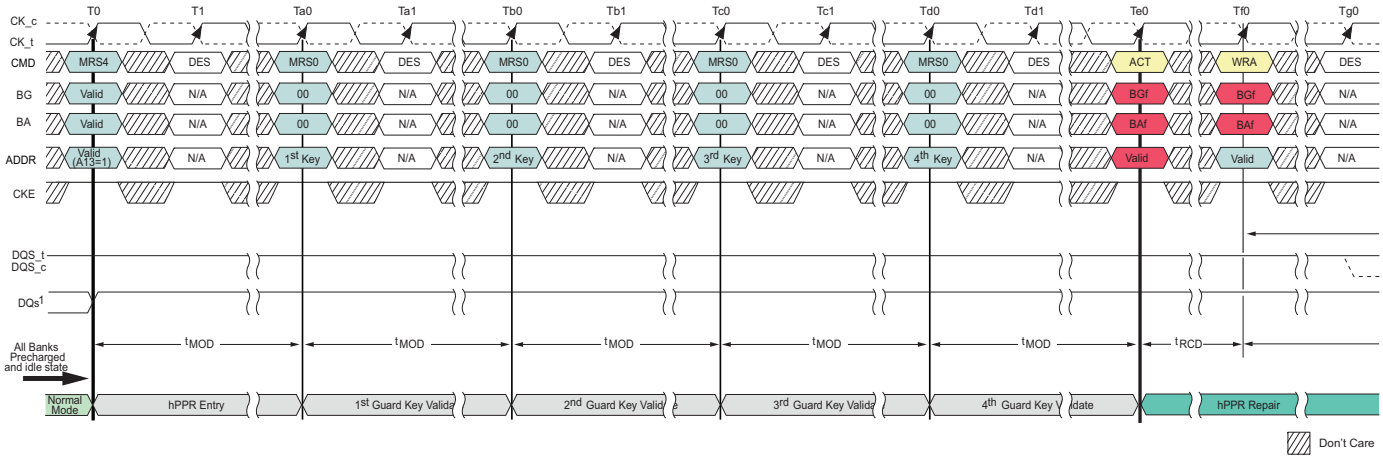

Micron Technology, Inc. reserves the right to change products or specifications without notice.
© 2018 Micron Technology, Inc. All rights reserved.

Figure 75: hPPR WRA – Repair and Exit

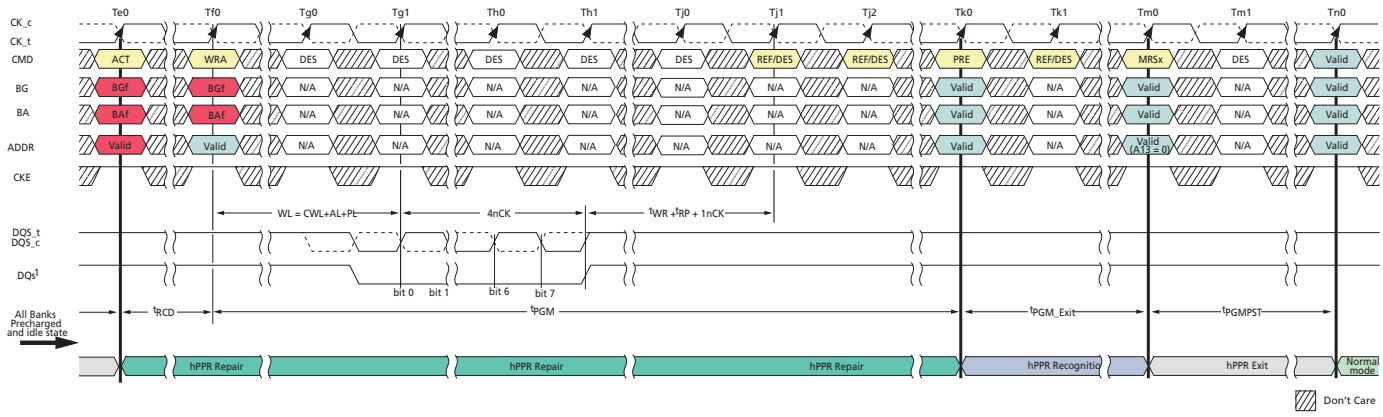

hPPR Row Repair – WR Initiated (REF Commands NOT Allowed)

1. Issue an ACT command with failing BG and BA with the row address to be repaired.
2. Issue a WR command with BG and BA of failing row address.
   a) The address must be at valid levels, but the address is Don't Care.
3. All DQ of the target DRAM should be driven LOW for 4*n*CK (bit 0 through bit 7) after WL (WL = CWL + AL + PL) in order for hPPR to initiate repair.
   a) Repair **will be** initiated to the target DRAM only if all DQ during bit 0 through bit 7 are LOW.
   b) Repair **will not be** initiated to the target DRAM if any DQ during bit 0 through bit 7 is HIGH.
      i) JEDEC states: All DQs of target DRAM should be LOW for 4^{t}CK. If HIGH is driven to all DQs of a DRAM consecutively for equal to or longer than 2^{t}CK, then DRAM does not conduct hPPR and retains data if REF command is properly issued; if all DQs are neither LOW for 4^{t}CK nor HIGH for equal to or longer than 2^{t}CK, then hPPR mode execution is unknown.
   c) DQS should function normally.
4. REF commands may NOT be issued at anytime while in PPT mode.
5. Issue PRE after ^{t}PGM time so that the device can repair the target row during ^{t}PGM time.
   a) Wait ^{t}PGM_Exit after PRE to allow the device to recognize the repaired target row address.
6. Issue MR4[13] 0 command to hPPR mode disable.
   a) Wait ^{t}PGMPST for hPPR mode exit to complete.
   b) After ^{t}PGMPST has expired, any valid command may be issued.

The entire sequence from hPPR mode enable through hPPR mode disable may be repeated if more than one repair is to be done.

After completing hPPR mode, MR0 must be re-programmed to a prehPPR mode state if the device is to be accessed.

After hPPR mode has been exited, the DRAM controller can confirm if the target row was repaired correctly by writing data into the target row and reading it back.

Micron Technology, Inc. reserves the right to change products or specifications without notice.
© 2018 Micron Technology, Inc. All rights reserved.

Figure 76: hPPR WR – Entry

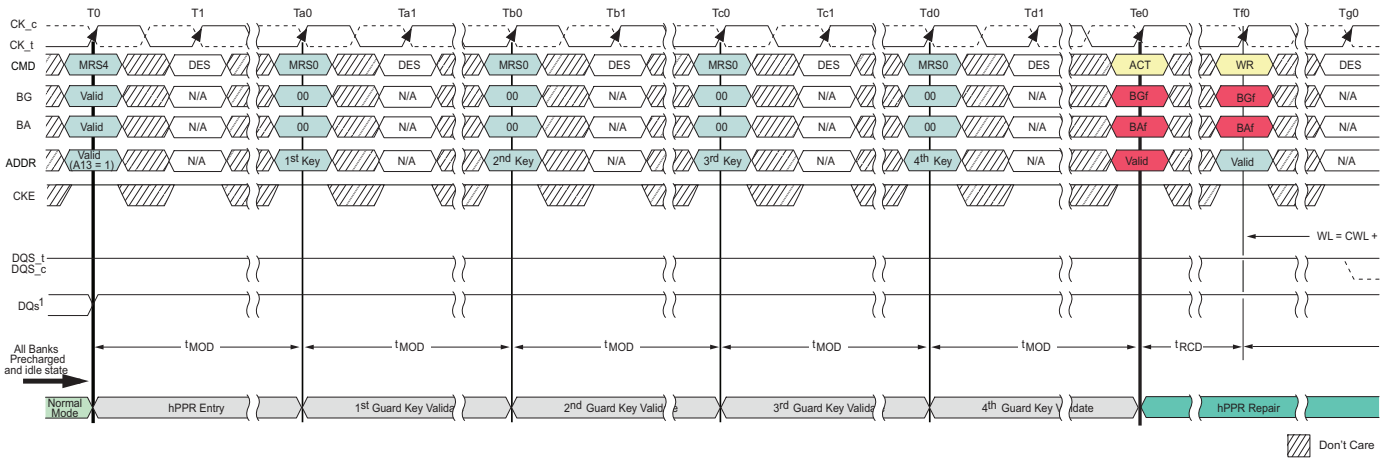

Figure 77: hPPR WR – Repair and Exit

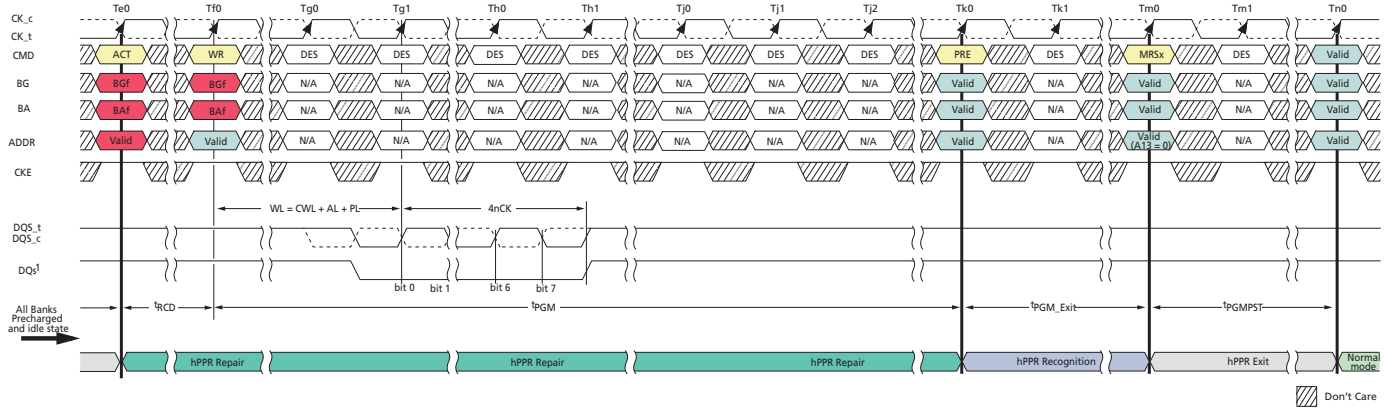

Table 42: DDR4 hPPR Timing Parameters DDR4-1600 through DDR4-3200

Parameter	Symbol		Min	Max	Unit
hPPR programming time	^{t}PGM	×4, ×8	1000	–	ms
		×16	2000	–	ms
hPPR precharge exit time	^{t}PGM_Exit		15	–	ns
hPPR exit time	^{t}PGMPST		50	–	µs

sPPR Row Repair

Soft post package repair (sPPR) is a way to quickly, but temporarily, repair a row element in a bank on a DRAM device, where hPPR takes longer but permanently repairs a row element. sPPR mode is entered in a similar fashion as hPPR, sPPR uses MR4[5] while hPPR uses MR4[13]. sPPR is disabled with MR4[5] = 0, which is the normal state, and sPPR is enabled with MR4[5] = 1, which is the sPPR enabled state.

sPPR requires the same guard key sequence as hPPR to qualify the MR4 PPR entry. After sPPR entry, an ACT command will capture the target bank and target row, herein seed row, where the row repair will be made. After ^{t}RCD time, a WR command is used to select the individual DRAM, through the DQ bits,

Micron Technology, Inc. reserves the right to change products or specifications without notice.
© 2018 Micron Technology, Inc. All rights reserved.

to transfer the repair address into an internal register in the DRAM. After a write recovery time and PRE command, the sPPR mode can be exited and normal operation can resume.

The DRAM will retain the soft repair information as long as V_{DD} remains within the operating region unless rewritten by a subsequent sPPR entry to the same bank. If DRAM power is removed or the DRAM is reset, the soft repair will revert to the unrepaired state. hPPR and sPPR should not be enabled at the same time; Micron sPPR does not have to be disabled and cleared prior to entering hPPR mode, but sPPR must be disabled and cleared prior to entering MBIST-PPR mode.

With sPPR, Micron DDR4 can repair one row per bank. When a subsequent sPPR request is made to the same bank, the subsequently issued sPPR address will replace the previous sPPR address. When the hPPR resource for a bank is used up, the bank should be assumed to not have available resources for sPPR. If a repair sequence is issued to a bank with no repair resource available, the DRAM will ignore the programming sequence.

The bank receiving sPPR change is expected to retain memory array data in all rows except for the seed row and its associated row addresses. If the data in the memory array in the bank under sPPR repair is not required to be retained, then the handling of the seed row's associated row addresses is not of interest and can be ignored. If the data in the memory array is required to be retained in the bank under sPPR mode, then prior to executing the sPPR mode, the seed row and its associated row addresses should be backed up and subsequently restored after sPPR has been completed. sPPR associated seed row addresses are specified in the Table below; BA0 is not required by Micron DRAMs however it is JEDEC reserved.

Table 43: sPPR Associated Rows

sPPR Associated Row Address							
BA0*	A17	A16	A15	A14	A13	A1	A0

All banks must be precharged and idle. DBI and CRC modes must be disabled, and all sPPR timings must be followed as shown in the timing diagram that follows.

All other commands except those listed in the following sequences are illegal.

1. Issue MR4[5] 1 to enter sPPR mode enable.
   a) All DQ are driven HIGH.
2. Issue four consecutive guard key commands (shown in the table below) to MR0 with each command separated by ^{t}MOD. Please note that JEDEC recently added the four guard key entry used for hPPR to sPPR entry; early DRAMs may not require four guard key entry code. A prudent controller design should accommodate either option in case an earlier DRAM is used.
   a) Any interruption of the key sequence by other commands, such as ACT, WR, RD, PRE, REF, ZQ, and NOP, are not allowed.
   b) If the guard key bits are not entered in the required order or interrupted with other MR commands, sPPR will not be enabled, and the programming cycle will result in a NOP.
   c) When the sPPR entry sequence is interrupted and followed by ACT and WR commands, these commands will be conducted as normal DRAM commands.
   d) JEDEC allows A6:0 to be "Don't Care" on 4Gb and 8Gb devices from a supplier perspective and the user should rely on vendor datasheet.

Table 44: PPR MR0 Guard Key Settings

MR0	BG1:0	BA1:0	A17:12	A11	A10	A9	A8	A7	A6:0
First guard key	0	0	xxxxxx	1	1	0	0	1	1111111
Second guard key	0	0	xxxxxx	0	1	1	1	1	1111111

Micron Technology, Inc. reserves the right to change products or specifications without notice.
© 2018 Micron Technology, Inc. All rights reserved.

Table 44: PPR MR0 Guard Key Settings (Continued)

MR0	BG1:0	BA1:0	A17:12	A11	A10	A9	A8	A7	A6:0
Third guard key	0	0	xxxxxx	1	0	1	1	1	1111111
Fourth guard key	0	0	xxxxxx	0	0	1	1	1	1111111

3. After ^{t}MOD, issue an ACT command with failing BG and BA with the row address to be repaired.
4. After ^{t}RCD, issue a WR command with BG and BA of failing row address.
   a) The address must be at valid levels, but the address is a "Don't Care."
5. All DQ of the target DRAM should be driven LOW for 4*n*CK (bit 0 through bit 7) after WL (WL = CWL + AL + PL) in order for sPPR to initiate repair.
   a) Repair **will be** initiated to the target DRAM only if all DQ during bit 0 through bit 7 are LOW.
   b) Repair **will not be** initiated to the target DRAM if any DQ during bit 0 through bit 7 is HIGH.
      i) JEDEC states: All DQs of target DRAM should be LOW for 4^{t}CK. If HIGH is driven to all DQs of a DRAM consecutively for equal to or longer than the first 2^{t}CK, then DRAM does not conduct hPPR and retains data if REF command is properly issued; if all DQs are neither LOW for 4^{t}CK nor HIGH for equal to or longer than the first 2^{t}CK, then hPPR mode execution is unknown.
   c) DQS should function normally.
6. REF command may NOT be issued at anytime while in sPPR mode.
7. Issue PRE after ^{t}WR time so that the device can repair the target row during ^{t}WR time.
   a) Wait ^{t}PGM_Exit_s after PRE to allow the device to recognize the repaired target row address.
8. Issue MR4[5] 0 command to sPPR mode disable.
   a) Wait ^{t}PGMPST_s for sPPR mode exit to complete.
   b) After ^{t}PGMPST_s has expired, any valid command may be issued.

The entire sequence from sPPR mode enable through sPPR mode disable may be repeated if more than one repair is to be done.

After sPPR mode has been exited, the DRAM controller can confirm if the target row was repaired correctly by writing data into the target row and reading it back.

Figure 78: sPPR – Entry

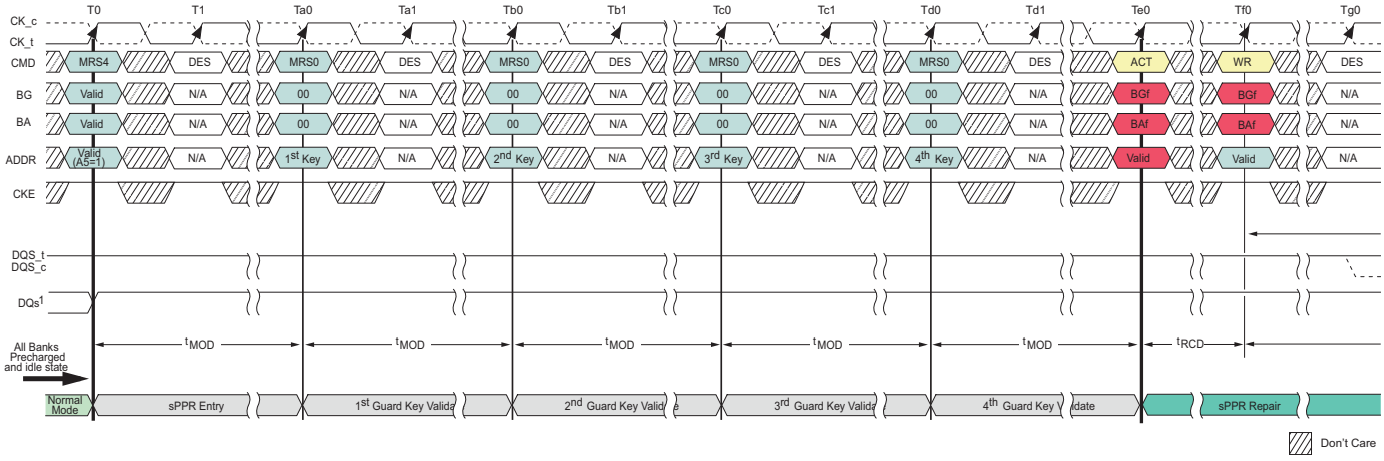

Micron Technology, Inc. reserves the right to change products or specifications without notice.
© 2018 Micron Technology, Inc. All rights reserved.

Figure 79: sPPR – Repair, and Exit

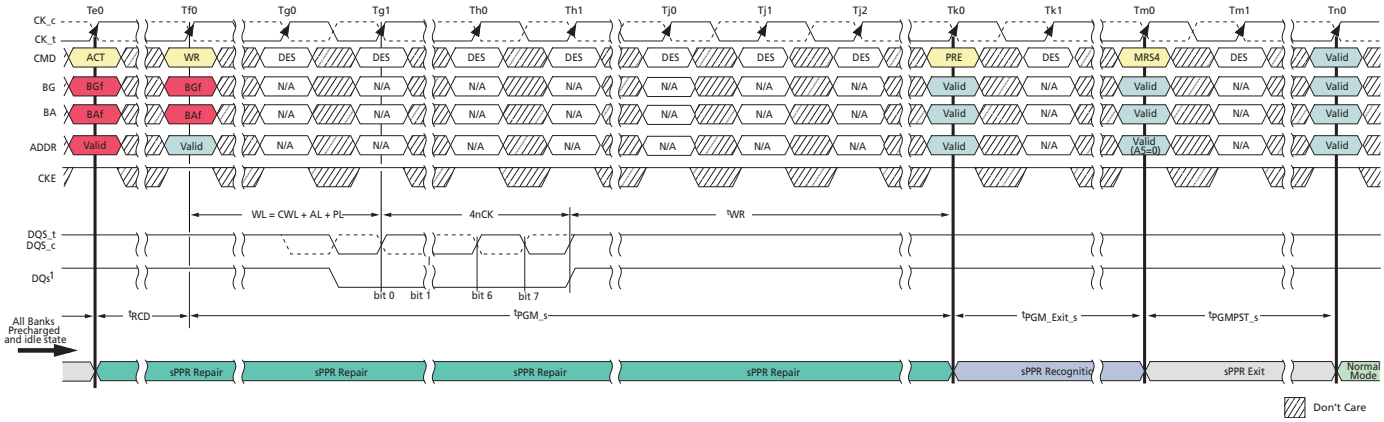

Table 45: DDR4 sPPR Timing Parameters DDR4-1600 Through DDR4-3200

Parameter	Symbol	Min	Max	Unit
sPPR programming time	^{t}PGM_s	^{t}RCD(MIN)+ WL + 4nCK + ^{t}WR(MIN)	–	ns
sPPR precharge exit time	^{t}PGM_Exit_s	20	–	ns
sPPR exit time	^{t}PGMPST_s	^{t}MOD	–	ns

MBIST-PPR

DDR4 devices can support optional memory built-in self-test post-package repair (MBIST-PPR) to help with hard failures such as single-bit or multi-bit failures in a single device so that weak cells can be scanned and repaired during the initialization phase. The DRAM will use vendor-specific patterns to investigate the status of all cell arrays and automatically perform PPR for weak bits during this operation. This operation introduces proactive, automated PPR by the DRAM, and it is recommended to be done for a very first boot-up at least. After that, it is at the controller's discretion whether to activate MBIST. MBIST mode can only be entered from the all banks idle state. The DLL is required to be enabled and locked prior to MBIST-PPR execution.

MBIST-PPR resources are separated from normal hPPR/sPPR resources. MBIST-PPR resources are typically used for initial scan and repair, and hPPR/sPPR resources must still satisfy the number of repair elements, one per BG, specified in the DDR4 Bank Group Timing Examples 1. Once the MBIST-PPR is completed, the DRAM will update the status flag in MPR3[7] of MPR page 3. Detailed status is described in the MPR Page and MPRx Definitions .

The test time of MBIST-PPR will not exceed 10 seconds for all mono-die DRAM densities. For DDP devices, test time will be 20 seconds.

The controller is required to inject an MRS command to enter this operation. The controller sets MR4:A0 to 1, followed by MR0 commands for the guard key. Then the DRAM enters MBIST-PPR operation. The ALERT_n signal notifies the host of the status of this operation. When the controller sets MR4:A0 to 1, followed by the MR0 guard key sequence, the DRAM drives ALERT_n to 0. Once the

Micron Technology, Inc. reserves the right to change products or specifications without notice.
© 2018 Micron Technology, Inc. All rights reserved.

MBIST-PPR is completed, the DRAM drives ALERT_n to 1 to notify the controller that this operation is completed. DRAM data will not be guaranteed after the MBIST-PPR operation.

Table 46: MBIST-PPR Timing Parameter

Parameter		Value		Unit
		Min	Max	
^{t}SELFHEAL	Monolithic	–	10	s
	DDP	–	20	

MBIST-PPR Procedure

The following sequences are required for MBIST-PPR and are shown in the figure below.

1. The DRAM needs to finalize initialization, MR training, and ZQ calibration prior to entering MBIST-PPR.
2. Four consecutive guard key commands must be issued to MR0, with each command separated by ^{t}MOD. The PPR guard key settings are the same whether performing sPPR, hPPR, or MBIST-PPR mode.
3. Anytime after Tk in the Read Termination Disable Window 14, the host must set MR4:A0 to 1, followed by subsequent MR0 guard key sequences (which is identical to typical hPPR/sPPR guard key sequences and specified in Table 73) to start MBIST-PPR operation, and the DRAM drives the ALERT_n signal to 0.
4. During MBIST-PPR mode, only DESELECT commands are allowed.
5. The ODT pin must be driven LOW during MBIST-PPR to satisfy DODTLoff from time Tb0 until Tc2. The DRAM may or may not provide RTT_PARK termination during MBIST-PPR regardless of whether RTT_PARK is enabled in MR5.

Micron Technology, Inc. reserves the right to change products or specifications without notice.
© 2018 Micron Technology, Inc. All rights reserved.

Figure 80: MBIST-PPR Sequence

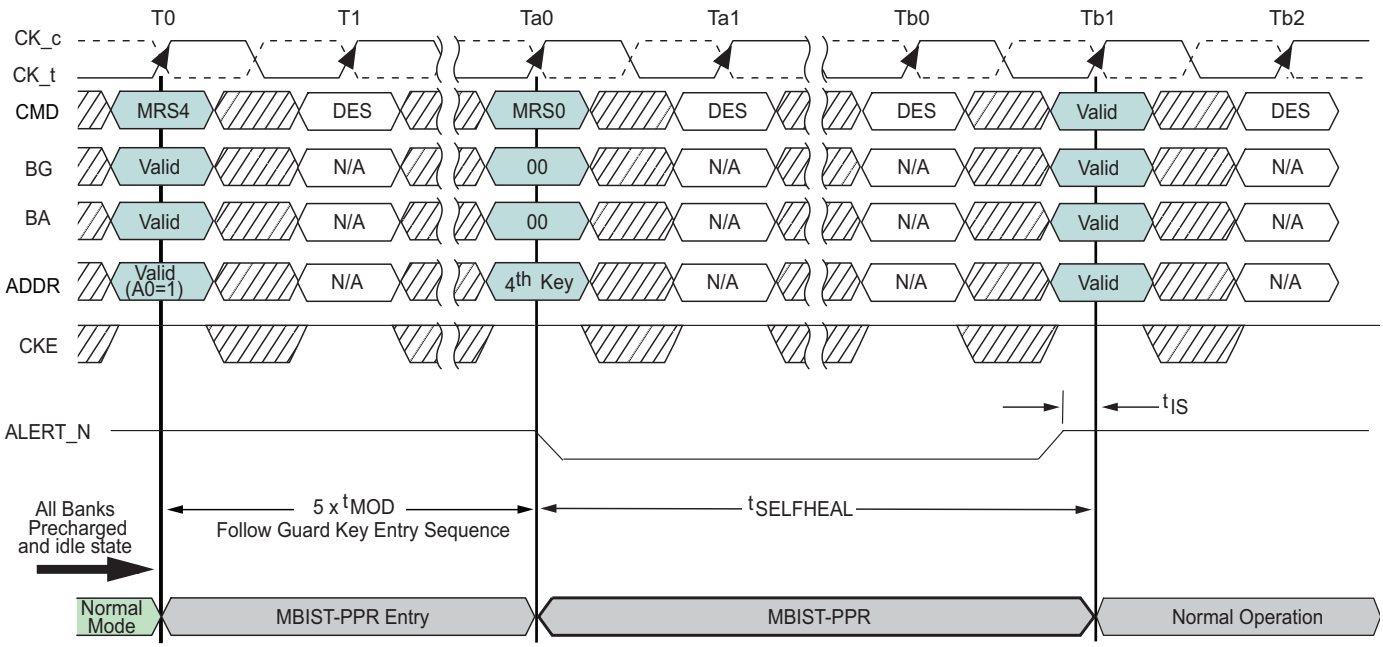

Table 47: MPR Page3 Configuration for MBIST-PPR

Address	MPR Location	[7]	[6]	[5]	[4]	[3]	[2]	[1]	[0]	Note
BA[1:0]	00 = MPR0	DC	DC	DC	DC	DC	DC	DC	DC	Read-only
	01 = MPR1	DC	DC	DC	DC	DC	DC	DC	DC	
	10 = MPR2	DC	DC	DC	DC	DC	DC	DC	DC	
	11 = MPR3	MBIST-PPR Support	DC	MBIST-PPR Transparency		MAC	MAC	MAC	MAC	

MPR Location	Address Bit	Function	Data	Notes
11 = MPR3	7	MBIST-PPR Support	0: Don't Support 1: Support	1
11 = MPR3	5:4	MBIST-PPR Transparency	00_B: MBIST-PPR hasn't run since init OR no fails found during most recent MBIST-PPR	1, 2
			01_B: Repaired all found fails during most recent run	1
			10_B: Unrepairable fails found during most recent run	1
			11_B: MBIST-PPR should be run again	1, 3

Notes: 1. MPR bits are cleared either by a power-up sequence or re-initialization by RESET_n signal
2. The host should track whether MBIST-PPR has run since INIT. If MBIST-PPR is performed and it finds no fails, this transparency state will remain set to 00_B
3. This state does not imply that MBIST-PPR is required to run again. This implies that additional repairable fails were found during the most recent MBIST-PPR beyond what could be repaired in the tSELFHEAL window.

Micron Technology, Inc. reserves the right to change products or specifications without notice.
© 2018 Micron Technology, Inc. All rights reserved.

hPPR/sPPR/MBIST-PPR Support Identifier

Table 48: DDR4 Repair Mode Support Identifier

MPR Page 2	A7	A6	A5	A4	A3	A2	A1	A0
	UI0	UI1	UI2	UI3	UI4	UI5	UI6	UI7
MPR0	hPPR[1]	sPPR[2]	R_{TT_WR}	Temp sensor		CRC	R_{TT_WR}	

MPR Page 3	A7	A6	A5	A4	A3	A2	A1	A0
	UI0	UI1	UI2	UI3	UI4	UI5	UI6	UI7
MPR3	MBIST-PPR Support[3]	Don't Care	MBIST-PPR Transparency		MAC	MAC	MAC	MAC

Notes: 1. 0 = hPPR mode is not available, 1 = hPPR mode is available.
2. 0 = sPPR mode is not available, 1 = sPPR mode is available.
3. 0 = MBIST-PPR mode is not available, 1 = MBIST-PPR mode is available.
4. Gray shaded areas are for reference only.

ACTIVATE Command

The ACTIVATE command is used to open (activate) a row in a particular bank for subsequent access. The values on the BG[1:0] inputs select the bank group, the BA[1:0] inputs select the bank within the bank group, and the address provided on inputs A[17:0] selects the row within the bank. This row remains active (open) for accesses until a PRECHARGE command is issued to that bank. A PRECHARGE command must be issued before opening a different row in the same bank.
Bank-to-bank command timing for ACTIVATE commands uses two different timing parameters, depending on whether the banks are in the same or different bank group. ^{t}RRD_S (short) is used for timing between banks located in different bank groups. ^{t}RRD_L (long) is used for timing between banks located in the same bank group. Another timing restriction for consecutive ACTIVATE commands [issued at ^{t}RRD (MIN)] is ^{t}FAW (four activate window). Because there is a maximum of four banks in a bank group, the ^{t}FAW parameter applies across different bank groups (five ACTIVATE commands issued at ^{t}RRD_L (MIN) to the same bank group would be limited by ^{t}RC).

Figure 81: ^{t}RRD Timing

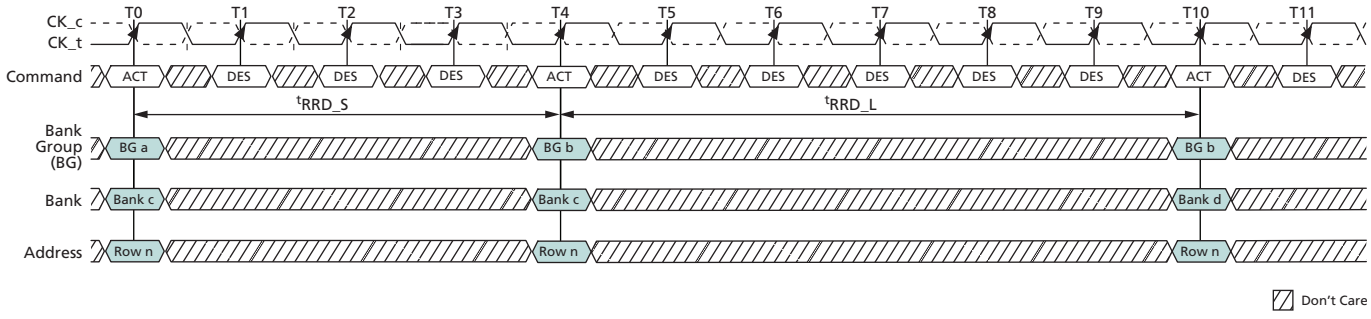

Notes: 1. ^{t}RRD_S; ACTIVATE-to-ACTIVATE command period (short); applies to consecutive ACTIVATE commands to different bank groups (that is, T0 and T4).
2. ^{t}RRD_L; ACTIVATE-to-ACTIVATE command period (long); applies to consecutive ACTIVATE commands to the different banks in the same bank group (that is, T4 and T10).

Micron Technology, Inc. reserves the right to change products or specifications without notice.
© 2018 Micron Technology, Inc. All rights reserved.

Figure 82: tFAW Timing

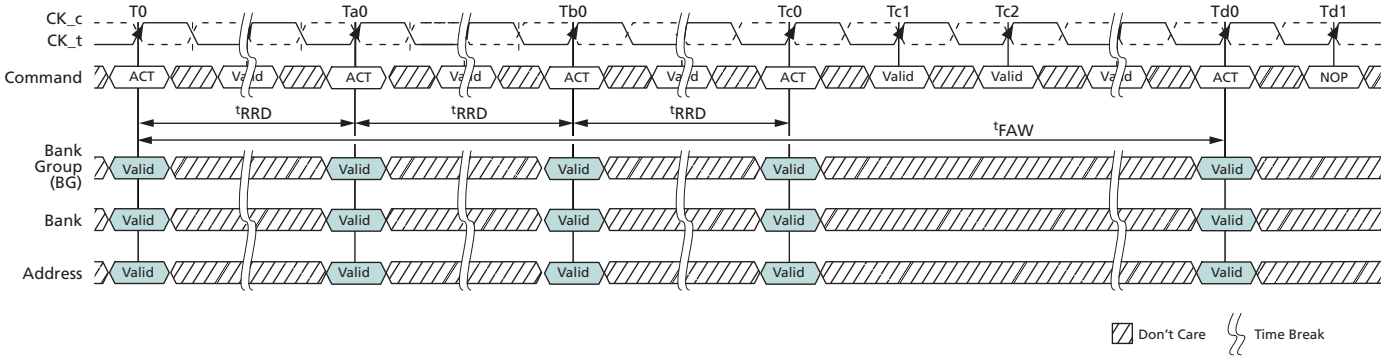

Note: 1. tFAW; four activate windows.

PRECHARGE Command

The PRECHARGE command is used to deactivate the open row in a particular bank or the open row in all banks. The bank(s) will be available for a subsequent row activation for a specified time (tRP) after the PRECHARGE command is issued. An exception to this is the case of concurrent auto precharge, where a READ or WRITE command to a different bank is allowed as long as it does not interrupt the data transfer in the current bank and does not violate any other timing parameters.

After a bank is precharged, it is in the idle state and must be activated prior to any READ or WRITE commands being issued to that bank. A PRECHARGE command is allowed if there is no open row in that bank (idle state) or if the previously open row is already in the process of precharging. However, the precharge period will be determined by the last PRECHARGE command issued to the bank.

The auto precharge feature is engaged when a READ or WRITE command is issued with A10 HIGH. The auto precharge feature uses the RAS lockout circuit to internally delay the PRECHARGE operation until the ARRAY RESTORE operation has completed. The RAS lockout circuit feature allows the PRECHARGE operation to be partially or completely hidden during burst READ cycles when the auto precharge feature is engaged. The PRECHARGE operation will not begin until after the last data of the burst write sequence is properly stored in the memory array.

REFRESH Command

The REFRESH command (REF) is used during normal operation of the device. This command is nonpersistent, so it must be issued each time a refresh is required. The device requires REFRESH cycles at an average periodic interval of tREFI. When CS_n, RAS_n/A16, and CAS_n/A15 are held LOW and WE_n/A14 HIGH at the rising edge of the clock, the device enters a REFRESH cycle. All banks of the SDRAM must be precharged and idle for a minimum of the precharge time, tRP (MIN), before the REFRESH command can be applied. The refresh addressing is generated by the internal DRAM refresh controller. This makes the address bits "Don't Care" during a REFRESH command. An internal address counter supplies the addresses during the REFRESH cycle. No control of the external address bus is required once this cycle has started. When the REFRESH cycle has completed, all banks of the SDRAM will be in the precharged (idle) state. A delay between the REFRESH command and the next valid command, except DES, must be greater than or equal to the minimum REFRESH cycle time tRFC (MIN), as shown in .

NOTE: The tRFC timing parameter depends on memory density.

Micron Technology, Inc. reserves the right to change products or specifications without notice.
© 2018 Micron Technology, Inc. All rights reserved.

In general, a REFRESH command needs to be issued to the device regularly every ^{t}REFI interval. To allow for improved efficiency in scheduling and switching between tasks, some flexibility in the absolute refresh interval is provided for postponing and pulling-in the REFRESH command. A limited number REFRESH commands can be postponed depending on refresh mode: a maximum of 8 REFRESH commands can be postponed when the device is in 1X refresh mode; a maximum of 16 REFRESH commands can be postponed when the device is in 2X refresh mode; and a maximum of 32 REFRESH commands can be postponed when the device is in 4X refresh mode.

When 8 consecutive REFRESH commands are postponed, the resulting maximum interval between the surrounding REFRESH commands is limited to 9 × ^{t}REFI (see). For both the 2X and 4X refresh modes, the maximum interval between surrounding REFRESH commands allowed is limited to 17 × ^{t}REFI2 and 33 × ^{t}REFI4, respectively.

A limited number REFRESH commands can be pulled-in as well. A maximum of 8 additional REFRESH commands can be issued in advance or "pulled-in" in 1X refresh mode, a maximum of 16 additional REFRESH commands can be issued when in advance in 2X refresh mode, and a maximum of 32 additional REFRESH commands can be issued in advance when in 4X refresh mode. Each of these REFRESH commands reduces the number of regular REFRESH commands required later by one. The resulting maximum interval between two surrounding REFRESH commands is limited to 9 × ^{t}REFI ( ), 17 × ^{t}RFEI2, or 33 × ^{t}REFI4. At any given time, a maximum of 16 REF commands can be issued within 2 × ^{t}REFI, 32 REF2 commands can be issued within 4 × ^{t}REFI2, and 64 REF4 commands can be issued within 8 × ^{t}REFI4 (larger densities are limited by tRFC1, tRFC2, and tRFC4, respectively, which must still be met).

Figure 83: REFRESH Command Timing

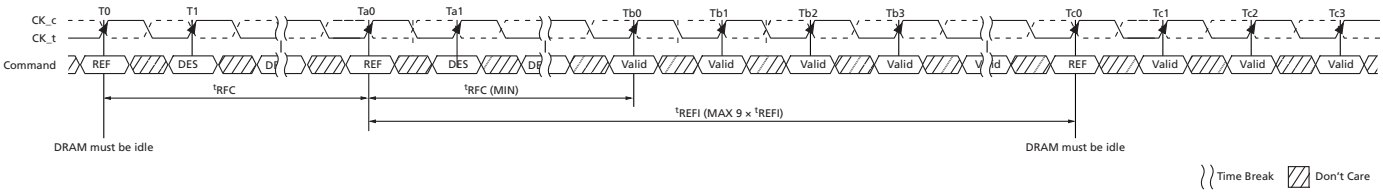

Notes: 1. Only DES commands are allowed after a REFRESH command is registered until ^{t}RFC (MIN) expires.
2. Time interval between two REFRESH commands may be extended to a maximum of 9 × ^{t}REFI.

Figure 84: Postponing REFRESH Commands (Example)

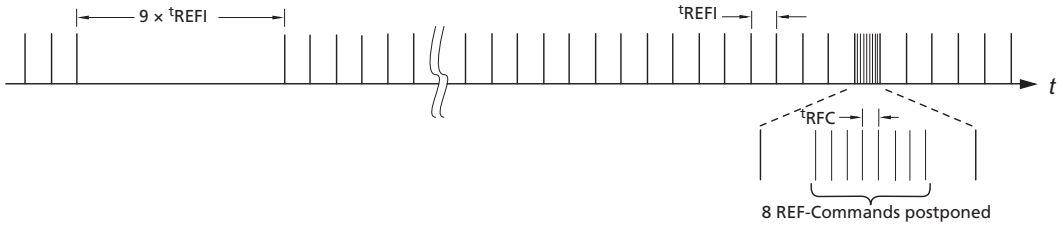

Micron Technology, Inc. reserves the right to change products or specifications without notice.
© 2018 Micron Technology, Inc. All rights reserved.

Figure 85: Pulling In REFRESH Commands (Example)

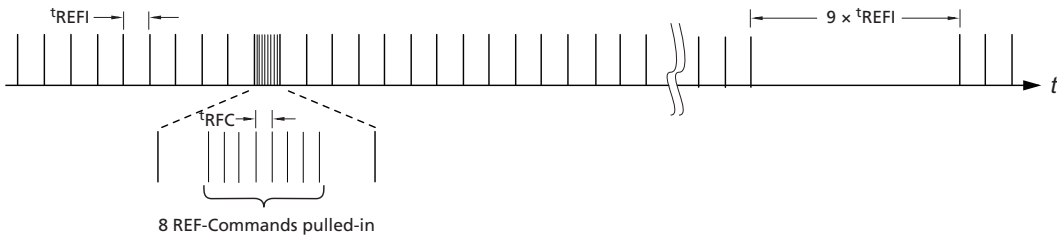

Micron Technology, Inc. reserves the right to change products or specifications without notice.
© 2018 Micron Technology, Inc. All rights reserved.

Temperature-Controlled Refresh Mode

During normal operation, temperature-controlled refresh (TCR) mode disabled, the device must have a REFRESH command issued once every ^{t}REFI, except for what is allowed by posting (see REFRESH Command section). This means a REFRESH command must be issued once every 7.8µs if T_C is less than or equal to 85°C, once every 3.9µs if T_C is greater than 85°C, once every 1.95µs if T_C is greater than 95°C, regardless of which Temperature Mode is selected (MR4[2]). TCR mode is disabled by setting MR4[3] = 0 while TCR mode is enabled by setting MR4[3] = 1. When TCR mode is enabled (MR4[3] = 1), the Temperature Mode must be selected where MR4[2] = 0 enables the Normal Temperature Mode while MR4[2] = 1 enables the Extended Temperature Mode.

When TCR mode is enabled, the device will register the externally supplied REFRESH command and adjust the internal refresh period to be longer than ^{t}REFI of the normal temperature range, when allowed, by skipping REFRESH commands with the proper gear ratio. TCR mode has two Temperature Modes to select between the normal temperature range and the extended temperature range; the correct Temperature Mode must be selected so the internal control operates correctly. The DRAM must have the correct refresh rate applied externally; the internal refresh rate is determined by the DRAM based upon the temperature.

Normal Temperature Mode

REFRESH commands should be issued to the device with the refresh period equal to ^{t}REFI of normal temperature range (-40°C to 85°C). The system must guarantee that the T_C does not exceed 85°C when ^{t}REFI of the normal temperature range is used. The device may adjust the internal refresh period to be longer than ^{t}REFI of the normal temperature range by skipping external REFRESH commands with the proper gear ratio when T_C is below 85°C. The internal refresh period is automatically adjusted inside the DRAM, and the DRAM controller does not need to provide any additional control.

Extended Temperature Mode

REFRESH commands should be issued to the device with the refresh period equal to ^{t}REFI of extended temperature range (85°C to 95°C, or 95°C to 105°C) . The system must guarantee that the T_C does not exceed 95°C, or 105°C. Even though the external refresh supports the extended temperature range, the device may adjust its internal refresh period to be equal to or longer than ^{t}REFI of the normal temperature range (-40°C to 85°C) by skipping external REFRESH commands with the proper gear ratio when T_C is equal to or below 85°C. The internal refresh period is automatically adjusted inside the DRAM, and the DRAM controller does not need to provide any additional control.

Table 49: Normal ^{t}REFI Refresh (TCR Enabled)

	Normal Temperature Mode		Extended Temperature Mode	
Temperature	External Refresh Period	Internal Refresh Period	External Refresh Period	Internal Refresh Period
$T_C \le 85°C$	7.8µs	≥7.8µs	3.9µs[1]	≥7.8µs
$85°C < T_C \le 95°C$	3.9µs			
$95°C < T_C \le 105°C$	1.95µs			

Notes: 1. If the external refresh period is slower than 3.9µs, the device will refresh internally at too slow of a refresh rate and will violate refresh specifications.

Micron Technology, Inc. reserves the right to change products or specifications without notice.
© 2018 Micron Technology, Inc. All rights reserved.

Figure 86: TCR Mode Example[1]

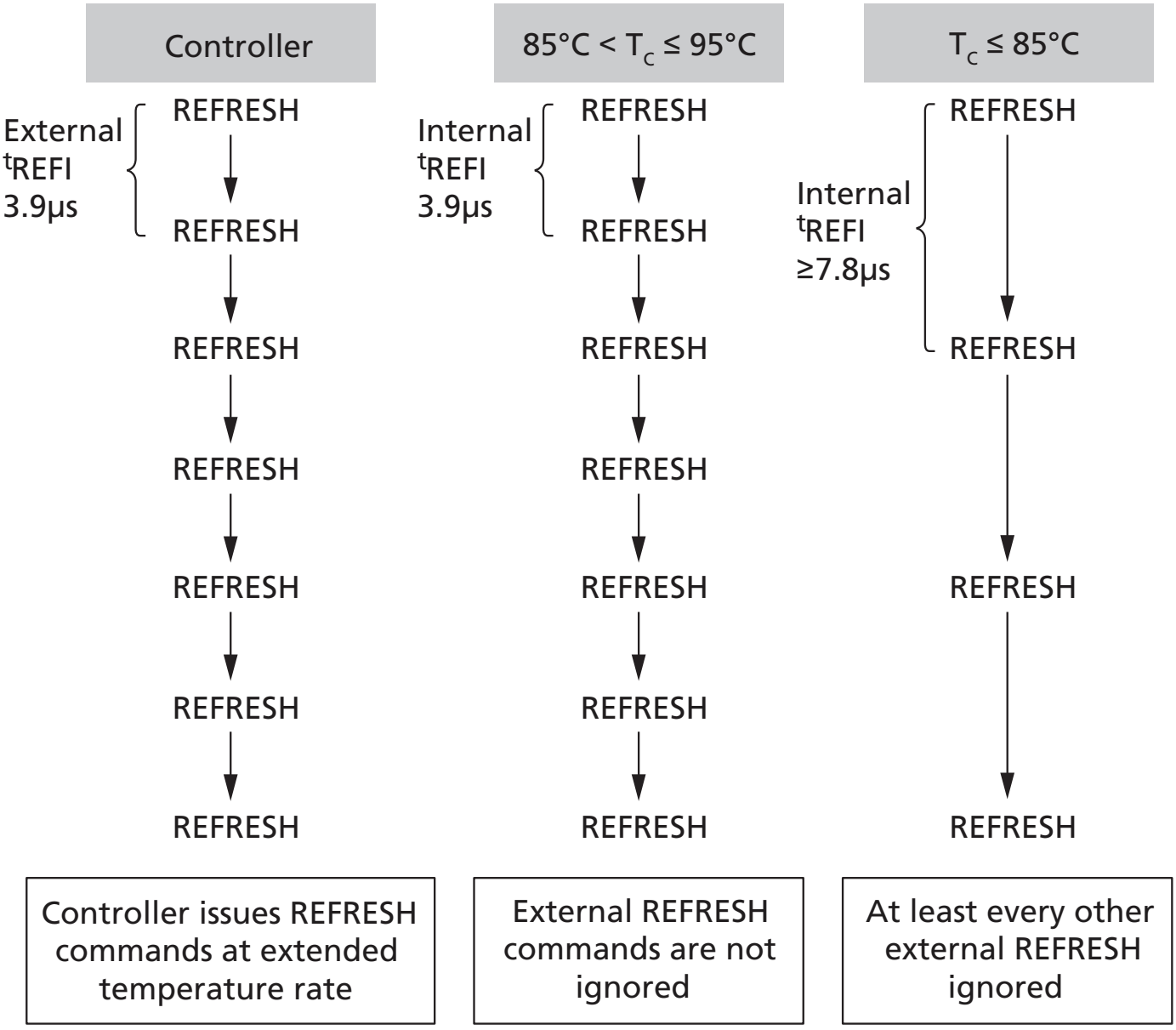

Note: 1. TCR enabled with Extended Temperature Mode selected.

Micron Technology, Inc. reserves the right to change products or specifications without notice.
© 2018 Micron Technology, Inc. All rights reserved.

Fine Granularity Refresh Mode

Mode Register and Command Truth Table

The REFRESH cycle time (^{t}RFC) and the average refresh interval (^{t}REFI) can be programmed by the MRS command. The appropriate setting in the mode register will set a single set of REFRESH cycle times and average refresh interval for the device (fixed mode), or allow the dynamic selection of one of two sets of REFRESH cycle times and average refresh interval for the device (on-the-fly mode [OTF]). OTF mode must be enabled by MRS before any OTF REFRESH command can be issued.

Table 50: MRS Definition

MR3[8]	MR3[7]	MR3[6]	Refresh Rate Mode
0	0	0	Normal mode (fixed 1x)
0	0	1	Fixed 2x
0	1	0	Fixed 4x
0	1	1	Reserved
1	0	0	Reserved
1	0	1	On-the-fly 1x/2x
1	1	0	On-the-fly 1x/4x
1	1	1	Reserved

There are two types of OTF modes (1x/2x and 1x/4x modes) that are selectable by programming the appropriate values into the mode register MR3 [8:6]. When either of the two OTF modes is selected, the device evaluates the BG0 bit when a REFRESH command is issued, and depending on the status of BG0, it dynamically switches its internal refresh configuration between 1x and 2x (or 1x and 4x) modes, and then executes the corresponding REFRESH operation.

Table 51: REFRESH Command Truth Table

Refresh	CS_n	ACT_n	RAS_n/A15	CAS_n/A14	WE_n/A13	BG1	BG0	A10/AP	A[9:0], A[12:11], A[20:16]	MR3[8:6]
Fixed rate	L	H	L	L	H	V	V	V	V	0vv
OTF: 1x	L	H	L	L	H	V	L	V	V	1vv
OTF: 2x	L	H	L	L	H	V	H	V	V	101
OTF: 4x	L	H	L	L	H	V	H	V	V	110

^{t}REFI and ^{t}RFC Parameters

The default refresh rate mode is fixed 1x mode where REFRESH commands should be issued with the normal rate; that is, ^{t}REFI1 = ^{t}REFI(base) (for $T_C \leq 85°C$), and the duration of each REFRESH command is the normal REFRESH cycle time (^{t}RFC1). In 2x mode (either fixed 2x or OTF 2x mode), REFRESH commands should be issued to the device at the double frequency (^{t}REFI2 = ^{t}REFI(base)/2) of the normal refresh rate. In 4x mode, the REFRESH command rate should be quadrupled (^{t}REFI4 = ^{t}REFI(base)/4). Per each mode and command type, the ^{t}RFC parameter has different values as defined in the following table.

Micron Technology, Inc. reserves the right to change products or specifications without notice.
© 2018 Micron Technology, Inc. All rights reserved.

For discussion purposes, the REFRESH command that should be issued at the normal refresh rate and has the normal REFRESH cycle duration may be referred to as an REF1x command. The REFRESH command that should be issued at the double frequency (^{t}REFI2 = ^{t}REFI(base)/2) may be referred to as a REF2x command. Finally, the REFRESH command that should be issued at the quadruple rate (^{t}REFI4 = ^{t}REFI(base)/4) may be referred to as a REF4x command.

In the fixed 1x refresh rate mode, only REF1x commands are permitted. In the fixed 2x refresh rate mode, only REF2x commands are permitted. In the fixed 4x refresh rate mode, only REF4x commands are permitted. When the on-the-fly 1x/2x refresh rate mode is enabled, both REF1x and REF2x commands are permitted. When the OTF 1x/4x refresh rate mode is enabled, both REF1x and REF4x commands are permitted.

Table 52: ^{t}REFI and ^{t}RFC Parameters

Refresh Mode	Parameter		2Gb	4Gb	8Gb	16Gb	Units
	^{t}REFI (base)		7.8	7.8	7.8	7.8	µs
1x mode	^{t}REFI1	-40°C ≤ T_C ≤ 85°C	^{t}REFI(base)	^{t}REFI(base)	^{t}REFI(base)	^{t}REFI(base)	µs
		85°C ≤ T_C ≤ 95°C	^{t}REFI(base)/2	^{t}REFI(base)/2	^{t}REFI(base)/2	^{t}REFI(base)/2	µs
		95°C ≤ T_C ≤ 105°C	^{t}REFI(base)/4	^{t}REFI(base)/4	^{t}REFI(base)/4	^{t}REFI(base)/4	µs
	^{t}RFC1		160	260	350	350	ns
2x mode	^{t}REFI2	-40°C ≤ T_C ≤ 85°C	^{t}REFI(base)/2	^{t}REFI(base)/2	^{t}REFI(base)/2	^{t}REFI(base)/2	µs
		85°C ≤ T_C ≤ 95°C	^{t}REFI(base)/4	^{t}REFI(base)/4	^{t}REFI(base)/4	^{t}REFI(base)/4	µs
		95°C ≤ T_C ≤ 105°C	^{t}REFI(base)/8	^{t}REFI(base)/8	^{t}REFI(base)/8	^{t}REFI(base)/8	µs
	^{t}RFC2		110	160	260	260	ns
4x mode	^{t}REFI4	-40°C ≤ T_C ≤ 85°C	^{t}REFI(base)/4	^{t}REFI(base)/4	^{t}REFI(base)/4	^{t}REFI(base)/4	µs
		85°C ≤ T_C ≤ 95°C	^{t}REFI(base)/8	^{t}REFI(base)/8	^{t}REFI(base)/8	^{t}REFI(base)/8	µs
		95°C ≤ T_C ≤ 105°C	^{t}REFI(base)/16	^{t}REFI(base)/16	^{t}REFI(base)/16	^{t}REFI(base)/16	µs
	^{t}RFC4		90	110	160	160	ns

Micron Technology, Inc. reserves the right to change products or specifications without notice.
© 2018 Micron Technology, Inc. All rights reserved.

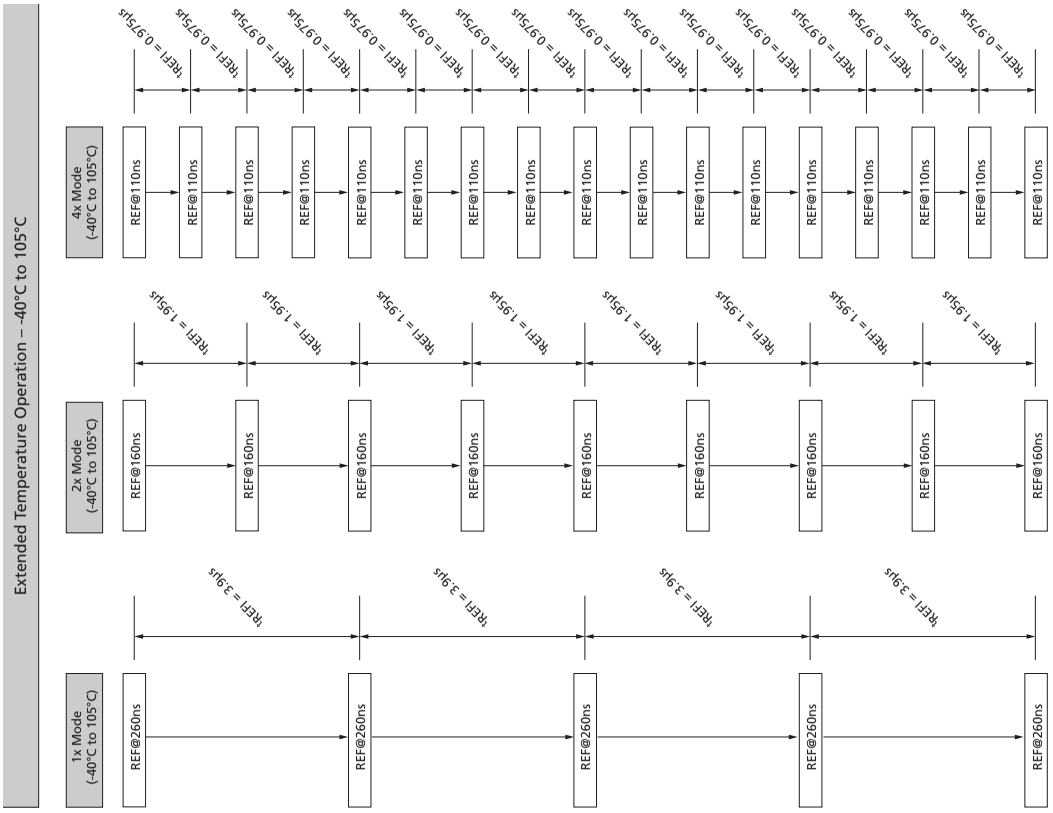

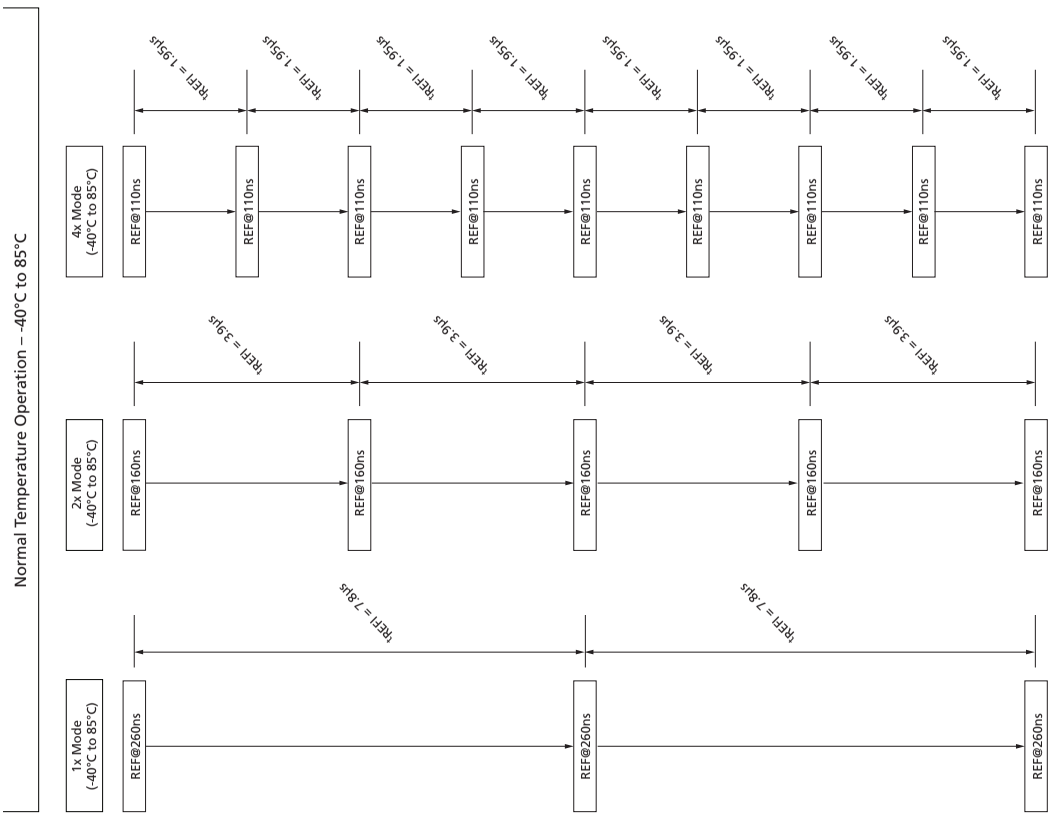

Figure 87: 4Gb with Fine Granularity Refresh Mode Example

Micron Technology, Inc. reserves the right to change products or specifications without notice.
© 2018 Micron Technology, Inc. All rights reserved.

Changing Refresh Rate

If the refresh rate is changed by either MRS or OTF. New ^{t}REFI and ^{t}RFC parameters will be applied from the moment of the rate change. When the REF1x command is issued to the DRAM, ^{t}REF1 and ^{t}RFC1 are applied from the time that the command was issued; when the REF2x command is issued, ^{t}REF2 and ^{t}RFC2 should be satisfied.

Figure 88: OTF REFRESH Command Timing

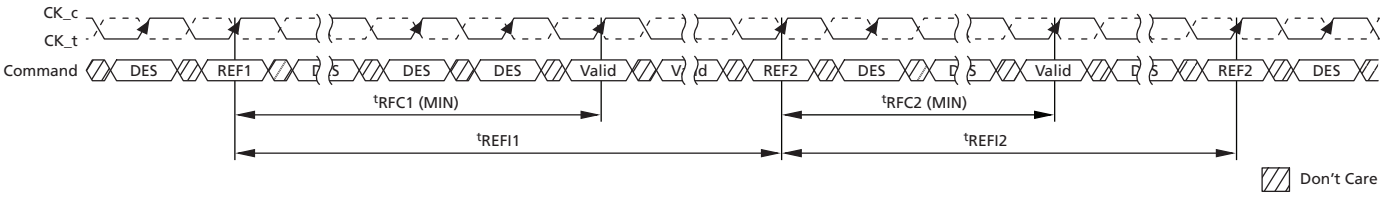

The following conditions must be satisfied before the refresh rate can be changed. Otherwise, data retention cannot be guaranteed.

- In the fixed 2x refresh rate mode or the OTF 1x/2x refresh mode, an even number of REF2x commands must be issued because the last change of the refresh rate mode with an MRS command before the refresh rate can be changed by another MRS command.
- In the OTF1x/2x refresh rate mode, an even number of REF2x commands must be issued between any two REF1x commands.
- In the fixed 4x refresh rate mode or the OTF 1x/4x refresh mode, a multiple-of-four number of REF4x commands must be issued because the last change of the refresh rate with an MRS command before the refresh rate can be changed by another MRS command.
- In the OTF1x/4x refresh rate mode, a multiple-of-four number of REF4x commands must be issued between any two REF1x commands.

There are no special restrictions for the fixed 1x refresh rate mode. Switching between fixed and OTF modes keeping the same rate is not regarded as a refresh rate change.

Usage with TCR Mode

If the temperature controlled refresh mode is enabled, only the normal mode (fixed 1x mode, MR3[8:6] = 000) is allowed. If any other refresh mode than the normal mode is selected, the temperature controlled refresh mode must be disabled.

Self Refresh Entry and Exit

The device can enter self refresh mode anytime in 1x, 2x, and 4x mode without any restriction on the number of REFRESH commands that have been issued during the mode before the self refresh entry. However, upon self refresh exit, extra REFRESH command(s) may be required, depending on the condition of the self refresh entry.

The conditions and requirements for the extra REFRESH command(s) are defined as follows:

- In the fixed 2x refresh rate mode or the enable-OTF 1x/2x refresh rate mode, it is recommended there be an even number of REF2x commands before entry into self refresh after the last self refresh exit, REF1x command, or MRS command that set the refresh mode. If this condition is met, no additional REFRESH commands are required upon self refresh exit. In the case that this condition is not met, either one extra REF1x command or two extra REF2x commands must be issued upon self refresh exit. These extra REFRESH commands are not counted toward the computation of the average refresh interval (^{t}REFI).

Micron Technology, Inc. reserves the right to change products or specifications without notice.
© 2018 Micron Technology, Inc. All rights reserved.

- In the fixed 4x refresh rate mode or the enable-OTF 1x/4x refresh rate mode, it is recommended there be a multiple-of-four number of REF4x commands before entry into self refresh after the last self refresh exit, REF1x command, or MRS command that set the refresh mode. If this condition is met, no additional refresh commands are required upon self refresh exit. When this condition is not met, either one extra REF1x command or four extra REF4x commands must be issued upon self refresh exit. These extra REFRESH commands are not counted toward the computation of the average refresh interval (^{t}REFI).

There are no special restrictions on the fixed 1x refresh rate mode.

This section does not change the requirement regarding postponed REFRESH commands. The requirement for the additional REFRESH command(s) described above is independent of the requirement for the postponed REFRESH commands.

Micron Technology, Inc. reserves the right to change products or specifications without notice.
© 2018 Micron Technology, Inc. All rights reserved.

SELF REFRESH Operation

The SELF REFRESH command can be used to retain data in the device, even if the rest of the system is powered down. When in self refresh mode, the device retains data without external clocking. The device has a built-in timer to accommodate SELF REFRESH operation. The SELF REFRESH command is defined by having CS_n, RAS_n, CAS_n, and CKE held LOW with WE_n and ACT_n HIGH at the rising edge of the clock.

Before issuing the SELF REFRESH ENTRY command, the device must be idle with all banks in the precharge state and ^{t}RP satisfied. Idle state is defined as: All banks are closed (^{t}RP, ^{t}DAL, and so on, satisfied), no data bursts are in progress, CKE is HIGH, and all timings from previous operations are satisfied (^{t}MRD, ^{t}MOD, ^{t}RFC, ^{t}ZQinit, ^{t}ZQoper, ^{t}ZQCS, and so on). After the SELF REFRESH ENTRY command is registered, CKE must be held LOW to keep the device in self refresh mode. The DRAM automatically disables ODT termination, regardless of the ODT pin, when it enters self refresh mode and automatically enables ODT upon exiting self refresh. During normal operation (DLL_on), the DLL is automatically disabled upon entering self refresh and is automatically enabled (including a DLL reset) upon exiting self refresh.

When the device has entered self refresh mode, all of the external control signals, except CKE and RESET_n, are "Don't Care." For proper SELF REFRESH operation, all power supply and reference pins (V_{DD}, V_{DDQ}, V_{SS}, V_{SSQ}, V_{PP}, and V_{REFCA}) must be at valid levels. The DRAM internal V_{REFDQ} generator circuitry may remain on or be turned off depending on the MR6 bit 7 setting. If the internal V_{REFDQ} circuit is on in self refresh, the first WRITE operation or first write-leveling activity may occur after ^{t}XS time after self refresh exit. If the DRAM internal V_{REFDQ} circuitry is turned off in self refresh, it ensures that the V_{REFDQ} generator circuitry is powered up and stable within the ^{t}XSDLL period when the DRAM exits the self refresh state. The first WRITE operation or first write-leveling activity may not occur earlier than ^{t}XSDLL after exiting self refresh. The device initiates a minimum of one REFRESH command internally within the ^{t}CKE period once it enters self refresh mode.

The clock is internally disabled during a SELF REFRESH operation to save power. The minimum time that the device must remain in self refresh mode is ^{t}CKESR/^{t}CKESR_PAR. The user may change the external clock frequency or halt the external clock ^{t}CKSRE/^{t}CKSRE_PAR after self refresh entry is registered; however, the clock must be restarted and ^{t}CKSRX must be stable before the device can exit SELF REFRESH operation.

The procedure for exiting self refresh requires a sequence of events. First, the clock must be stable prior to CKE going back HIGH. Once a SELF REFRESH EXIT command (SRX, combination of CKE going HIGH and DESELECT on the command bus) is registered, the following timing delay must be satisfied:

Commands that do not require locked DLL:

- ^{t}XS = ACT, PRE, PREA, REF, SRE, and PDE.
- ^{t}XS_FAST = ZQCL, ZQCS, and MRS commands. For an MRS command, only DRAM CL, WR/RTP register, and DLL reset in MR0; $R_{TT(NOM)}$ register in MR1; the CWL and $R_{TT(WR)}$ registers in MR2; and gear-down mode register in MR3; WRITE and READ preamble registers in MR4; $R_{TT(PARK)}$ register in MR5; Data rate and V_{REFDQ} calibration value registers in MR6 may be accessed provided the DRAM is not in per-DRAM mode. Access to other DRAM mode registers must satisfy ^{t}XS timing. WRITE commands (WR, WRS4, WRS8, WRA, WRAS4, and WRAS8) that require synchronous ODT and dynamic ODT controlled by the WRITE command require a locked DLL.

Commands that require locked DLL in the normal operating range:

Micron Technology, Inc. reserves the right to change products or specifications without notice.
© 2018 Micron Technology, Inc. All rights reserved.

- ^{t}XSDLL – RD, RDS4, RDS8, RDA, RDAS4, and RDAS8 (unlike DDR3, WR, WRS4, WRS8, WRA, WRAS4, and WRAS8 because synchronous ODT is required).

Depending on the system environment and the amount of time spent in self refresh, ZQ CALIBRATION commands may be required to compensate for the voltage and temperature drift described in the ZQ CALIBRATION Commands section. To issue ZQ CALIBRATION commands, applicable timing requirements must be satisfied (see the ZQ Calibration Timing figure).

CKE must remain HIGH for the entire self refresh exit period ^{t}XSDLL for proper operation except for self refresh re-entry. Upon exit from self refresh, the device can be put back into self refresh mode or power-down mode after waiting at least ^{t}XS period and issuing one REFRESH command (refresh period of ^{t}RFC). The DESELECT command must be registered on each positive clock edge during the self refresh exit interval ^{t}XS. ODT must be turned off during ^{t}XSDLL.

The use of self refresh mode introduces the possibility that an internally timed refresh event can be missed when CKE is raised for exit from self refresh mode. Upon exit from self refresh, the device requires a minimum of one extra REFRESH command before it is put back into self refresh mode.

Figure 89: Self Refresh Entry/Exit Timing

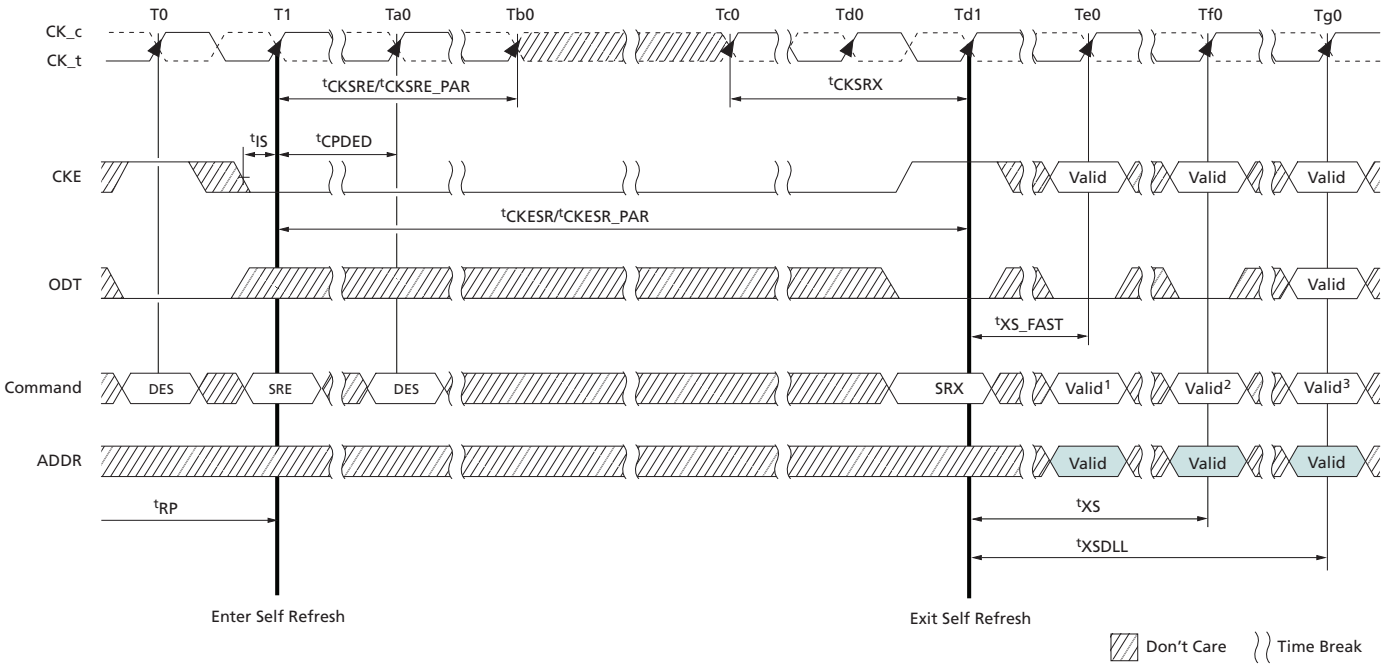

Notes: 1. Only MRS (limited to those described in the SELF REFRESH Operation section), ZQCS, or ZQCL commands are allowed.
2. Valid commands not requiring a locked DLL.
3. Valid commands requiring a locked DLL.

Micron Technology, Inc. reserves the right to change products or specifications without notice.
© 2018 Micron Technology, Inc. All rights reserved.

Figure 90: Self Refresh Entry/Exit Timing with CAL Mode

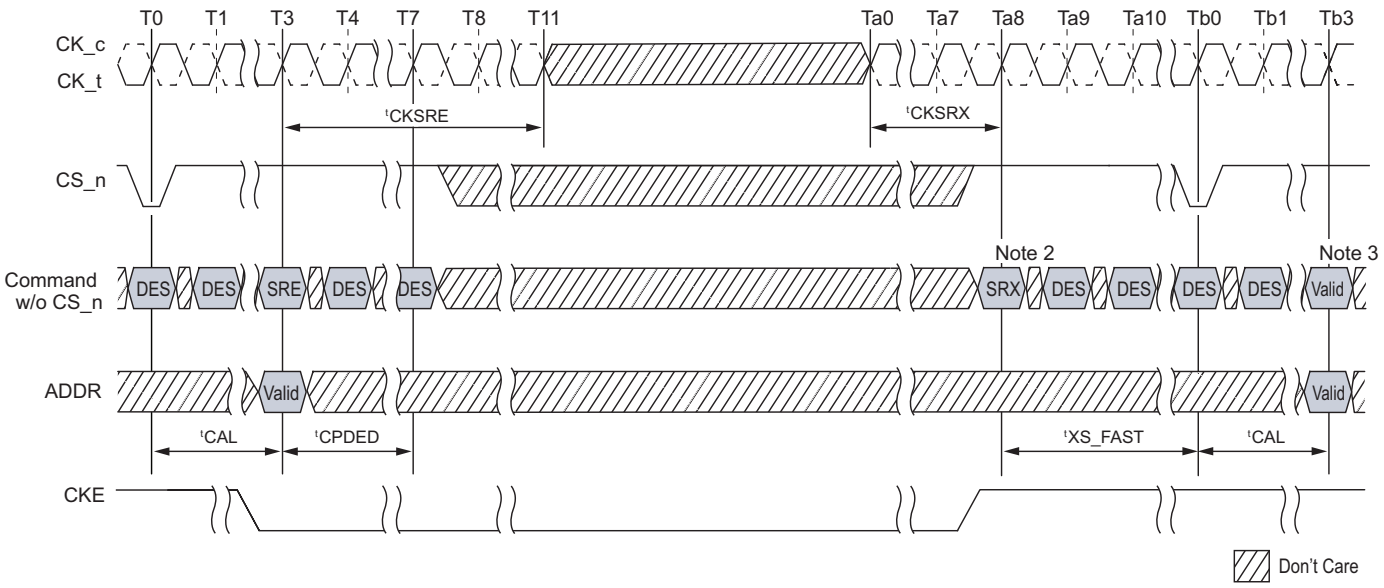

Notes: 1. ^{t}CAL = 3*n*CK, ^{t}CPDED = 4*n*CK, ^{t}CKSRE/^{t}CKSRE_PAR = 8*n*CK, ^{t}CKSRX = 8*n*CK, ^{t}XS_FAST = ^{t}REFC4 (MIN) + 10ns.
2. CS_n = HIGH, ACT_n = "Don't Care," RAS_n/A16 = "Don't Care," CAS_n/A15 = "Don't Care," WE_n/A14 = "Don't Care."
3. Only MRS (limited to those described in the SELF REFRESH Operations section), ZQCS, or ZQCL commands are allowed.
4. The figure only displays ^{t}XS_FAST timing, but ^{t}CAL must also be added to any ^{t}XS and ^{t}XSDLL associated commands during CAL mode.

Self Refresh Abort

The exit timing from self refresh exit to the first valid command not requiring a locked DLL is ^{t}XS. The value of ^{t}XS is (^{t}RFC1 + 10ns). This delay allows any refreshes started by the device time to complete. ^{t}RFC continues to grow with higher density devices, so ^{t}XS will grow as well. An MRS bit enables the self refresh abort mode. If the bit is disabled, the controller uses ^{t}XS timings (location MR4, bit 9). If the bit is enabled, the device aborts any ongoing refresh and does not increment the refresh counter. The controller can issue a valid command not requiring a locked DLL after a delay of ^{t}XS_ABORT. Upon exit from self refresh, the device requires a minimum of one extra REFRESH command before it is put back into self refresh mode. This requirement remains the same irrespective of the setting of the MRS bit for self refresh abort.

Micron Technology, Inc. reserves the right to change products or specifications without notice.
© 2018 Micron Technology, Inc. All rights reserved.

Figure 91: Self Refresh Abort

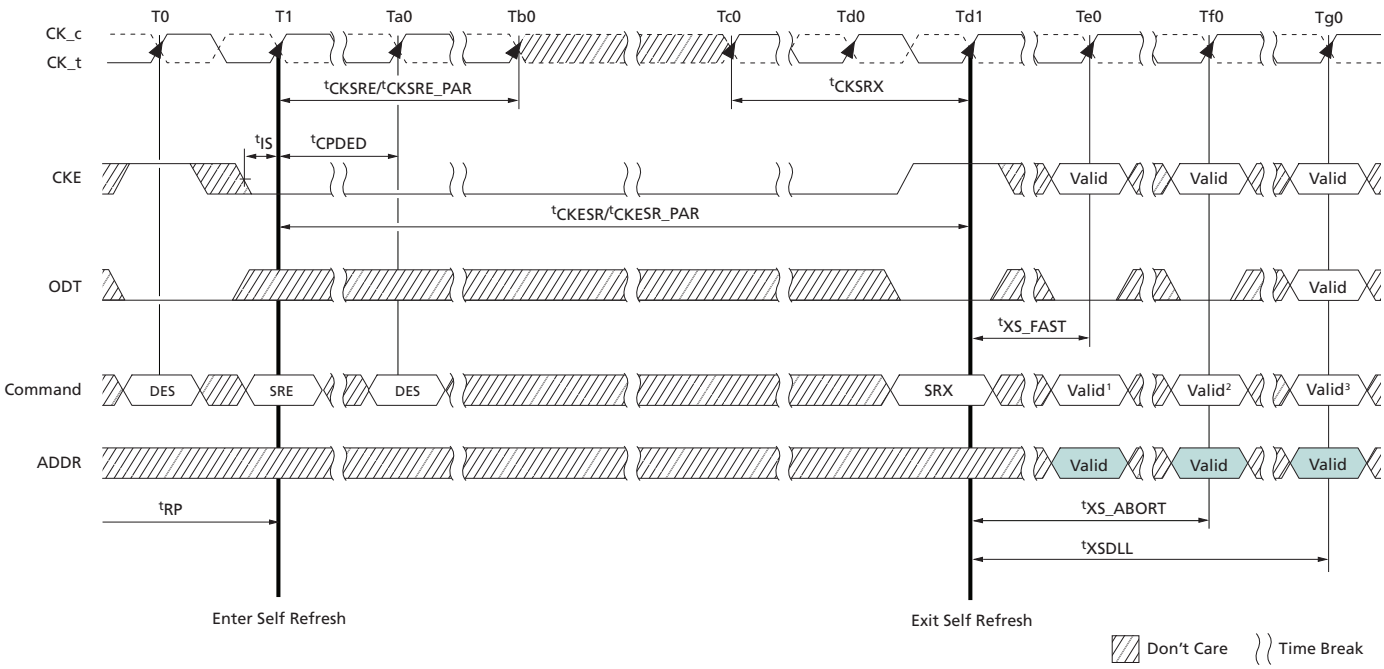

Notes: 1. Only MRS (limited to those described in the SELF REFRESH Operation section), ZQCS, or ZQCL commands are allowed.
2. Valid commands not requiring a locked DLL with self refresh abort mode enabled in the mode register.
3. Valid commands requiring a locked DLL.

Self Refresh Exit with NOP Command

Exiting self refresh mode using the NO OPERATION command (NOP) is allowed under a specific system application. This special use of NOP allows for a common command/address bus between active DRAM devices and DRAM(s) in maximum power saving mode. Self refresh mode may exit with NOP commands provided:

- The device entered self refresh mode with CA parity, CAL, and gear-down disabled.
- ^{t}MPX_S and ^{t}MPX_LH are satisfied.
- NOP commands are only issued during ^{t}MPX_LH window.

No other command is allowed during the ^{t}MPX_LH window after an SELF REFRESH EXIT (SRX) command is issued.

Micron Technology, Inc. reserves the right to change products or specifications without notice.
© 2018 Micron Technology, Inc. All rights reserved.

Figure 92: Self Refresh Exit with NOP Command

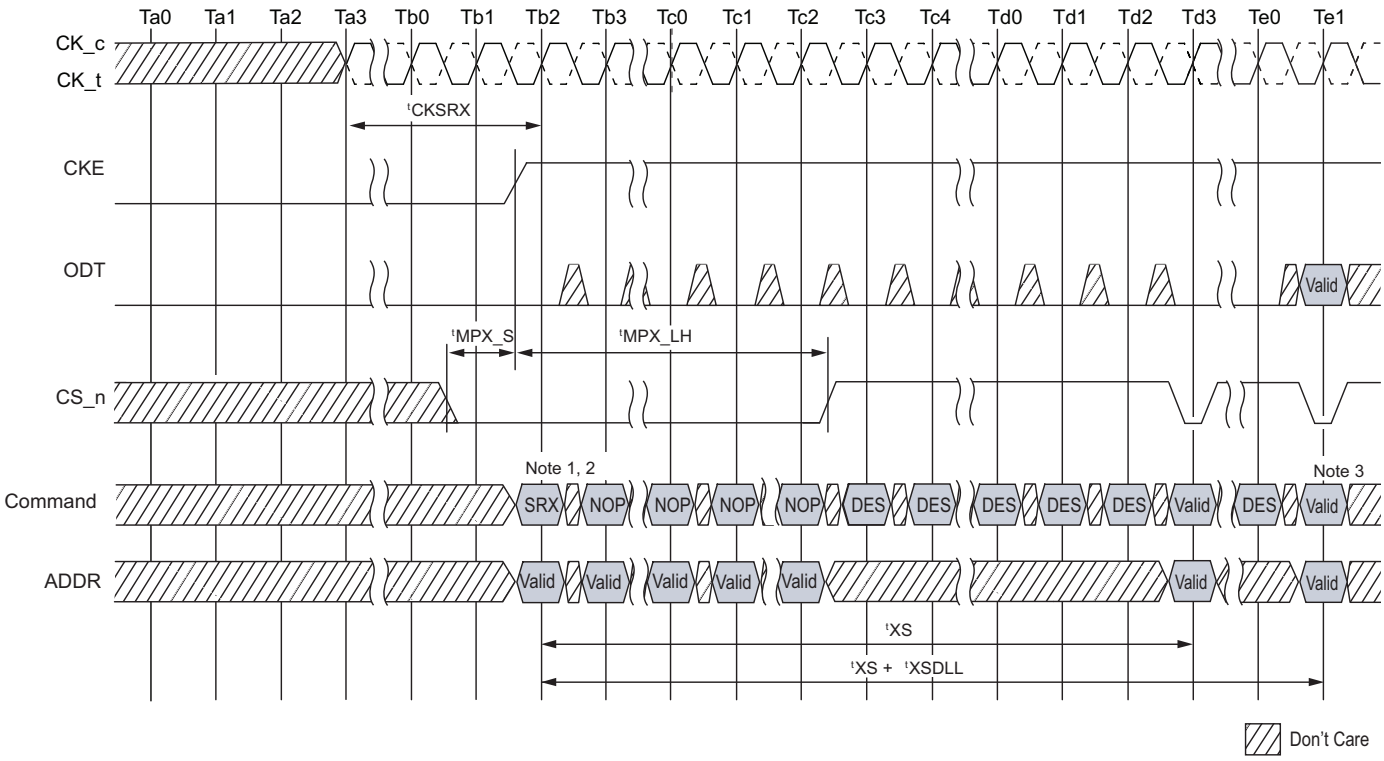

Micron Technology, Inc. reserves the right to change products or specifications without notice.
© 2018 Micron Technology, Inc. All rights reserved.

Power-Down Mode

Power-down is synchronously entered when CKE is registered LOW (along with a DESELECT command). CKE is not allowed to go LOW when the following operations are in progress: MRS command, MPR operations, ZQCAL operations, DLL locking, or READ/WRITE operations. CKE is allowed to go LOW while any other operations, such as ROW ACTIVATION, PRECHARGE or auto precharge, or REFRESH, are in progress, but the power-down I_{DD} specification will not be applied until those operations are complete. The timing diagrams that follow illustrate power-down entry and exit.

For the fastest power-down exit timing, the DLL should be in a locked state when power-down is entered. If the DLL is not locked during power-down entry, the DLL must be reset after exiting power-down mode for proper READ operation and synchronous ODT operation. DRAM design provides all AC and DC timing and voltage specification as well as proper DLL operation with any CKE intensive operations as long as the controller complies with DRAM specifications.

During power-down, if all banks are closed after any in-progress commands are completed, the device will be in precharge power-down mode; if any bank is open after in-progress commands are completed, the device will be in active power-down mode.

Entering power-down deactivates the input and output buffers, excluding CK, CKE, and RESET_n. In power-down mode, DRAM ODT input buffer deactivation is based on Mode Register 5, bit 5 (MR5[5]). If it is configured to 0b, the ODT input buffer remains on and the ODT input signal must be at valid logic level. If it is configured to 1b, the ODT input buffer is deactivated and the DRAM ODT input signal may be floating and the device does not provide $R_{TT(NOM)}$ termination. Note that the device continues to provide $R_{TT(Park)}$ termination if it is enabled in MR5[8:6]. To protect internal delay on the CKE line to block the input signals, multiple DES commands are needed during the CKE switch off and on cycle(s); this timing period is defined as ^{t}CPDED. CKE LOW will result in deactivation of command and address receivers after ^{t}CPDED has expired.

Table 53: Power-Down Entry Definitions

DRAM Status	DLL	Power-Down Exit	Relevant Parameters
Active (a bank or more open)	On	Fast	^{t}XP to any valid command.
Precharged (all banks precharged)	On	Fast	^{t}XP to any valid command.

The DLL is kept enabled during precharge power-down or active power-down. In power-down mode, CKE is LOW, RESET_n is HIGH, and a stable clock signal must be maintained at the inputs of the device. ODT should be in a valid state, but all other input signals are "Don't Care." (If RESET_n goes LOW during power-down, the device will be out of power-down mode and in the reset state.) CKE LOW must be maintained until ^{t}CKE has been satisfied. Power-down duration is limited by 9 × ^{t}REFI.

The power-down state is synchronously exited when CKE is registered HIGH (along with DES command). CKE HIGH must be maintained until ^{t}CKE has been satisfied. The ODT input signal must be at a valid level when the device exits from power-down mode, independent of MR1 bit [10:8] if $R_{TT(NOM)}$ is enabled in the mode register. If $R_{TT(NOM)}$ is disabled, the ODT input signal may remain floating. A valid, executable command can be applied with power-down exit latency, ^{t}XP, after CKE goes HIGH. Power-down exit latency is defined in the AC Specifications table.

Micron Technology, Inc. reserves the right to change products or specifications without notice.
© 2018 Micron Technology, Inc. All rights reserved.

Figure 93: Active Power-Down Entry and Exit

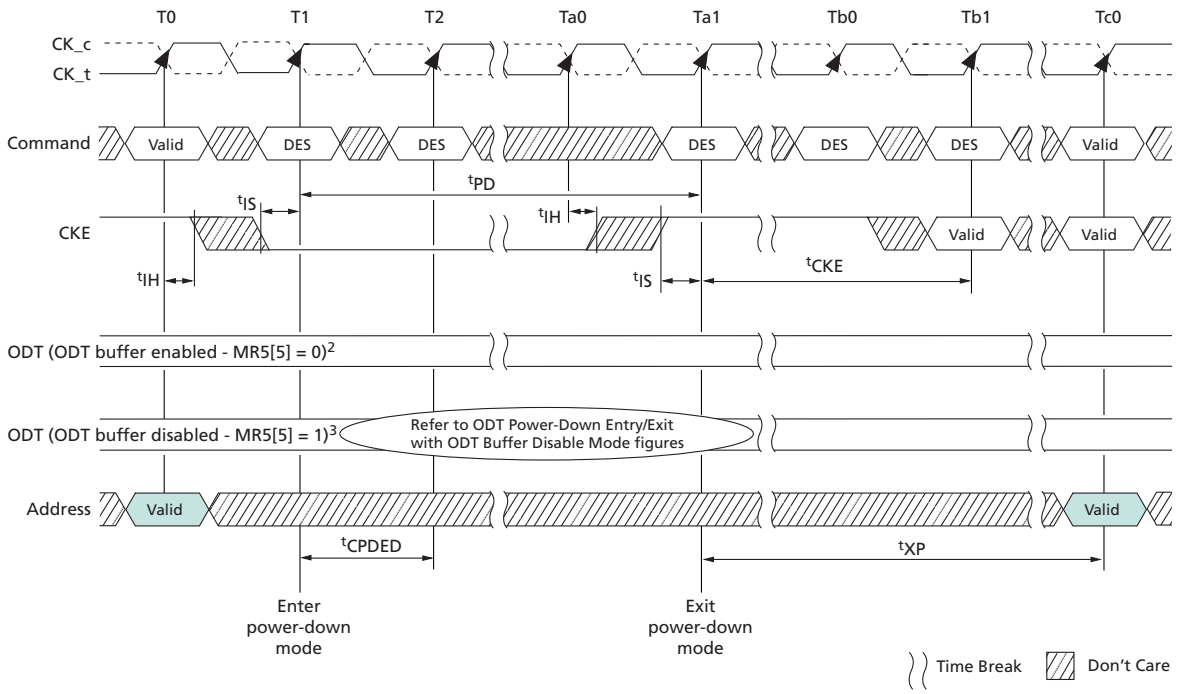

Notes: 1. Valid commands at T0 are ACT, DES, or PRE with one bank remaining open after completion of the PRECHARGE command.
2. ODT pin driven to a valid state; MR5[5] = 0 (normal setting).
3. ODT pin drive/float timing requirements for the ODT input buffer disable option (for additional power savings during active power-down) is described in the section for ODT Input Buffer Disable Mode for Power-Down; MR5[5] = 1.

Micron Technology, Inc. reserves the right to change products or specifications without notice.
© 2018 Micron Technology, Inc. All rights reserved.

Figure 94: Power-Down Entry After Read and Read with Auto Precharge

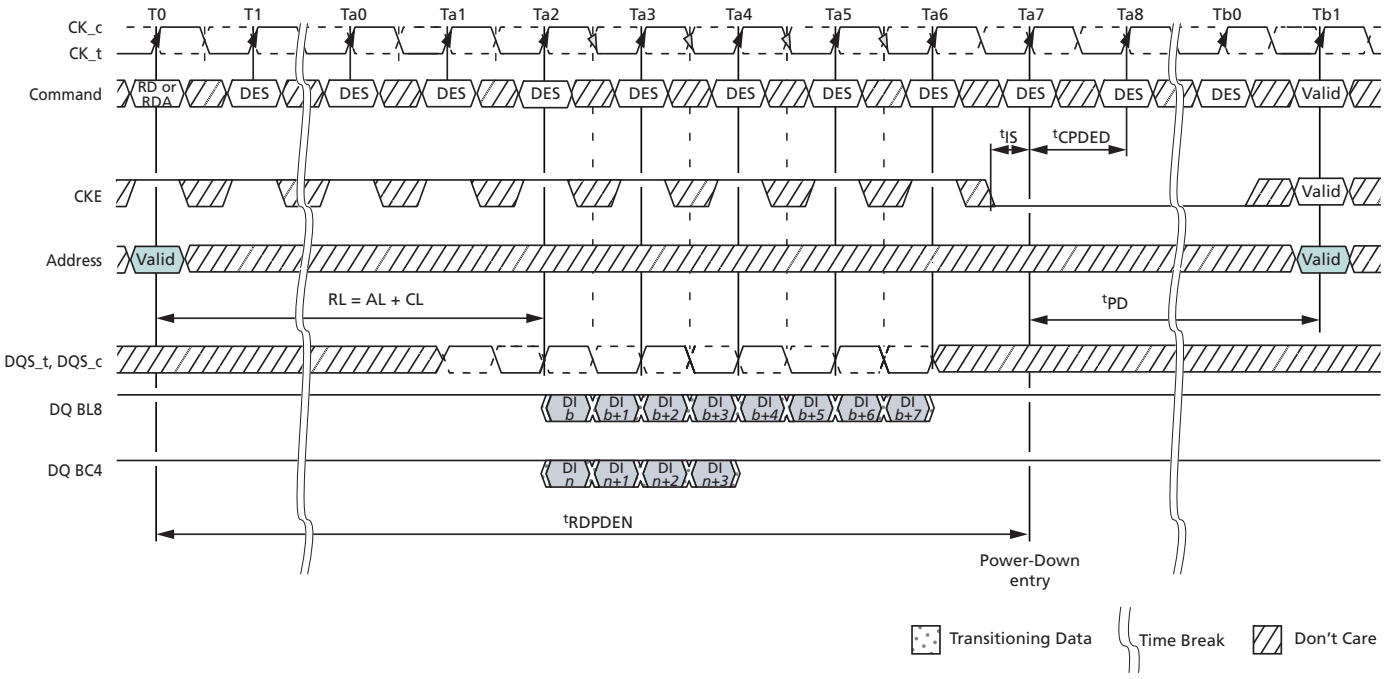

Note: 1. DI n (or b) = data-in from column n (or b).

Figure 95: Power-Down Entry After Write and Write with Auto Precharge

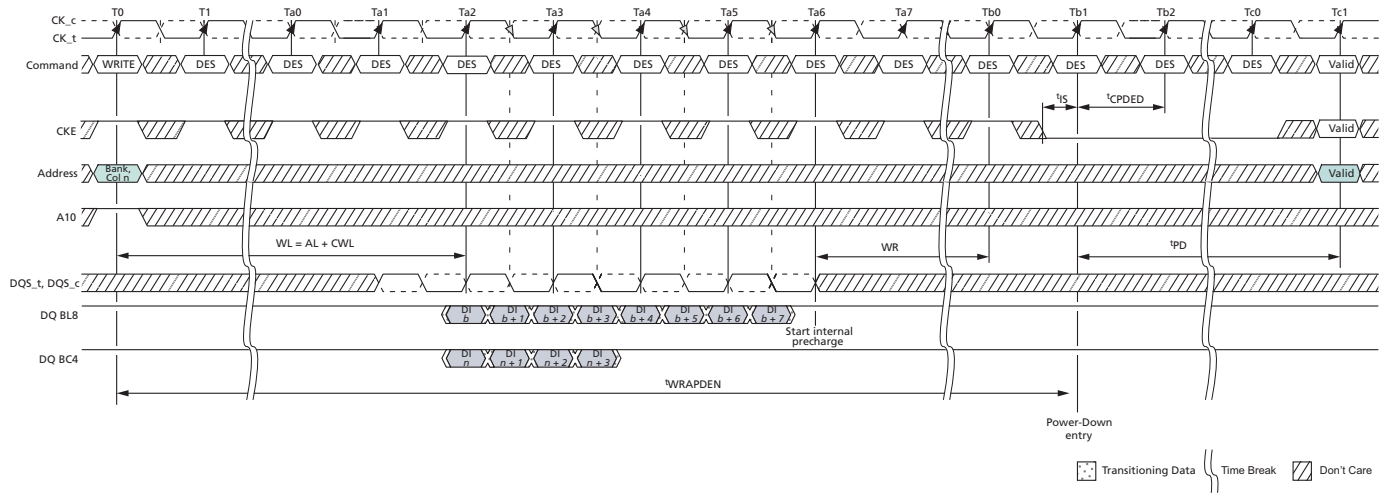

Notes: 1. DI n (or b) = data-in from column n (or b).
2. Valid commands at T0 are ACT, DES, or PRE with one bank remaining open after completion of the PRECHARGE command.

Micron Technology, Inc. reserves the right to change products or specifications without notice.
© 2018 Micron Technology, Inc. All rights reserved.

Figure 96: Power-Down Entry After Write

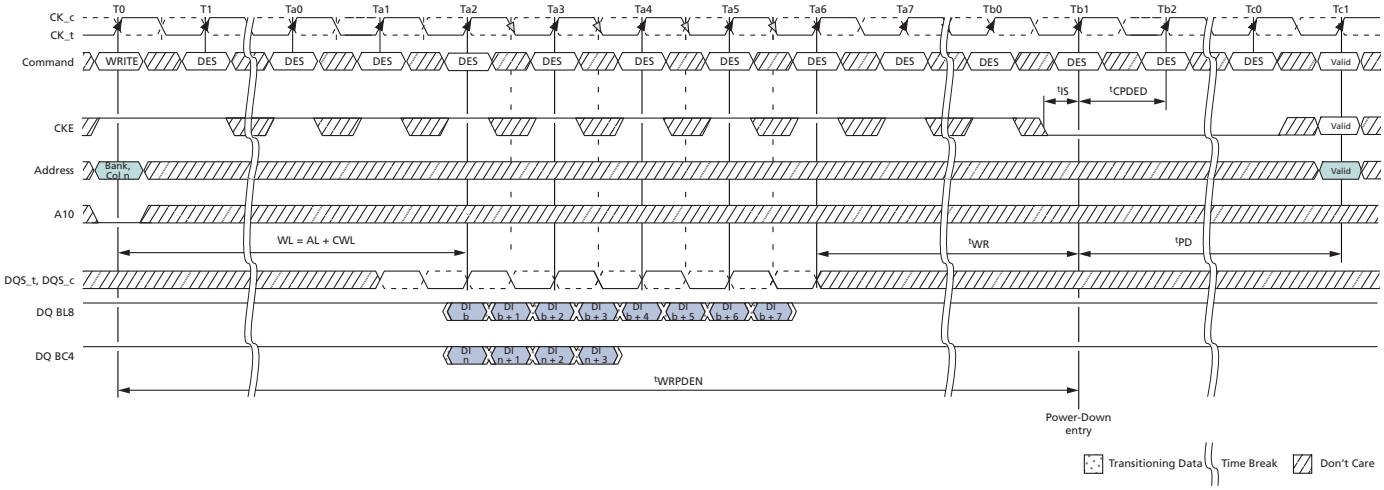

Note: 1. DI n (or b) = data-in from column n (or b).

Figure 97: Precharge Power-Down Entry and Exit

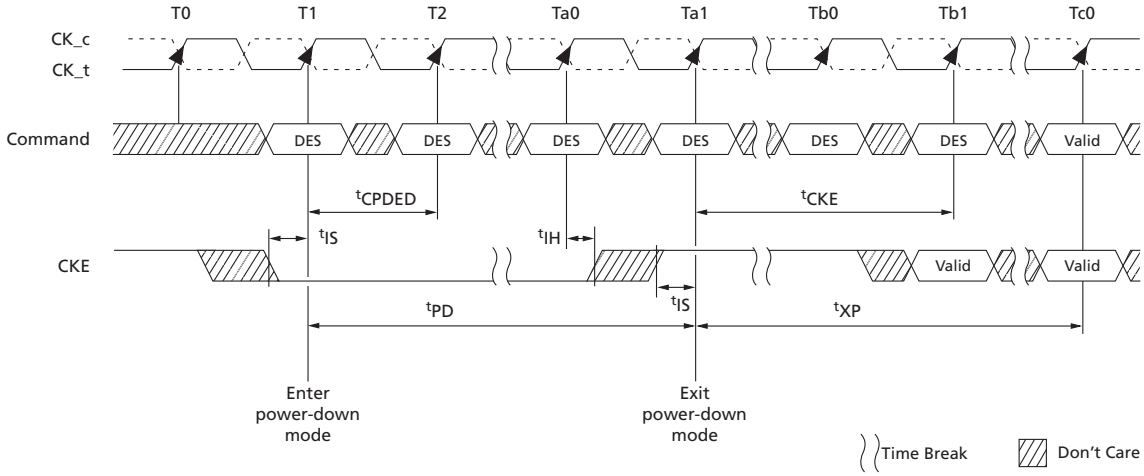

Micron Technology, Inc. reserves the right to change products or specifications without notice.
© 2018 Micron Technology, Inc. All rights reserved.

Figure 98: REFRESH Command to Power-Down Entry

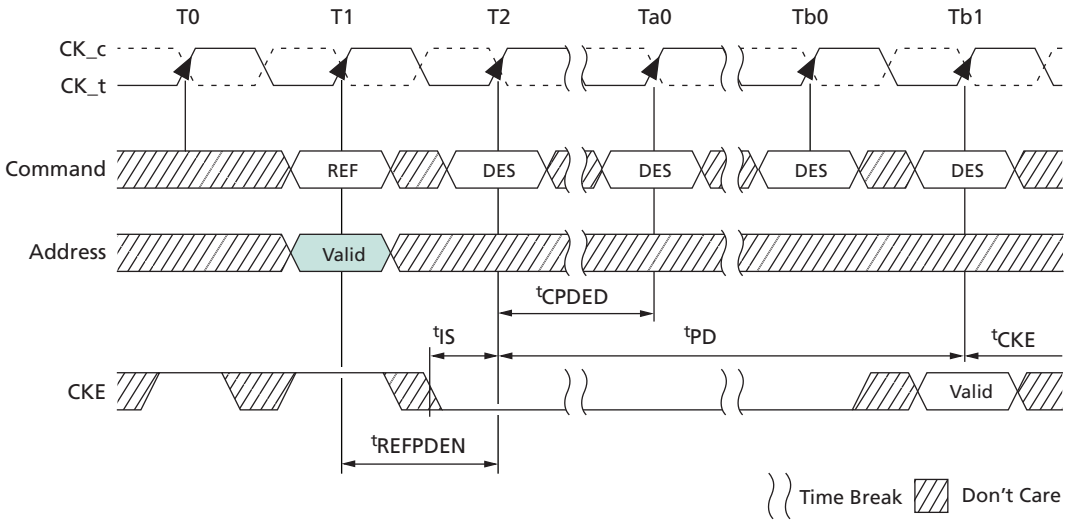

Figure 99: Active Command to Power-Down Entry

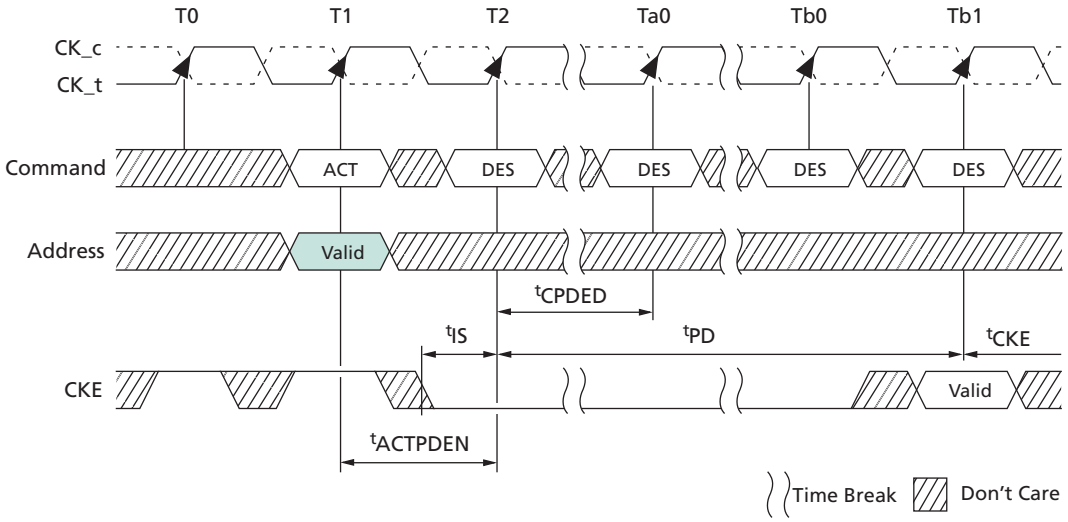

Micron Technology, Inc. reserves the right to change products or specifications without notice.
© 2018 Micron Technology, Inc. All rights reserved.

Figure 100: PRECHARGE/PRECHARGE ALL Command to Power-Down Entry

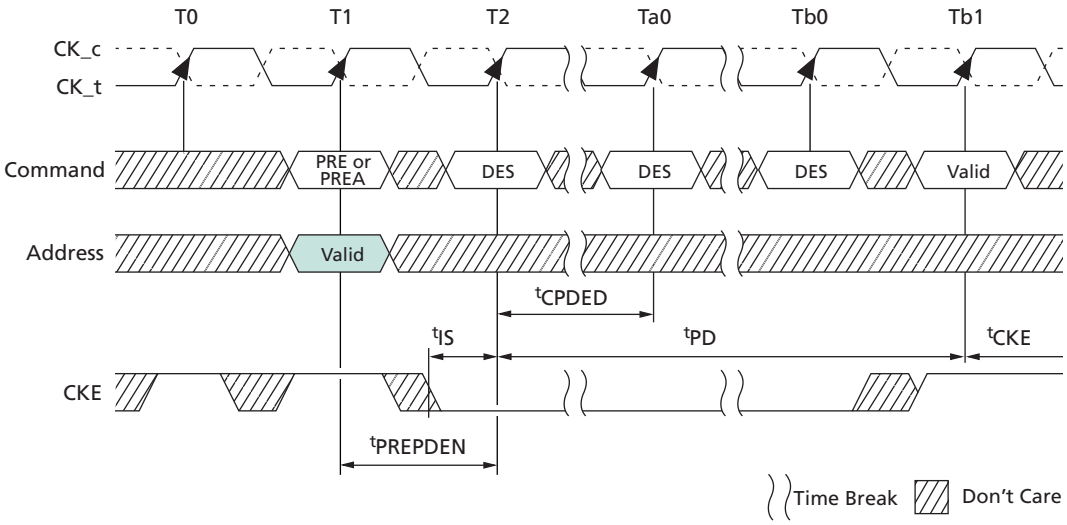

Figure 101: MRS Command to Power-Down Entry

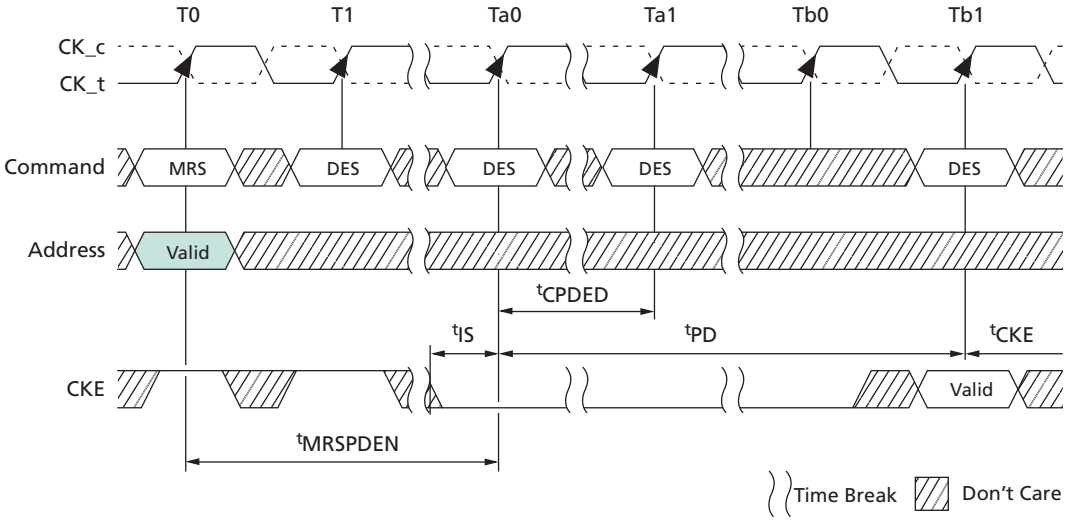

Power-Down Clarifications – Case 1

When CKE is registered LOW for power-down entry, ^{t}PD (MIN) must be satisfied before CKE can be registered HIGH for power-down exit. The minimum value of parameter ^{t}PD (MIN) is equal to the minimum value of parameter ^{t}CKE (MIN) as shown in the Timing Parameters by Speed Bin table. A detailed example of Case 1 follows.

Micron Technology, Inc. reserves the right to change products or specifications without notice.
© 2018 Micron Technology, Inc. All rights reserved.

Figure 102: Power-Down Entry/Exit Clarifications – Case 1

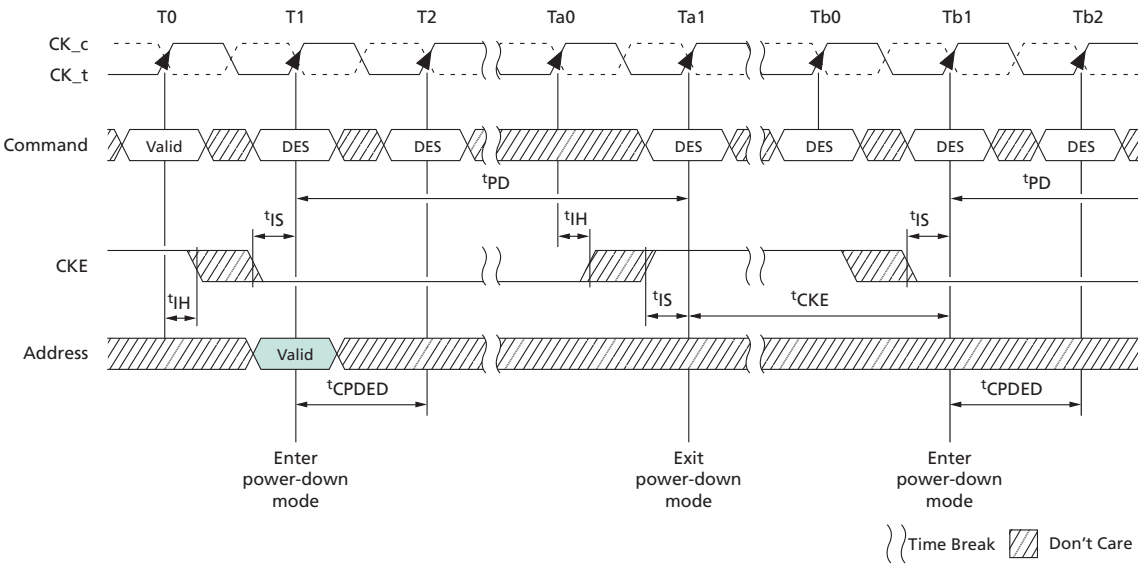

Power-Down Entry, Exit Timing with CAL

Command/Address latency is used and additional timing restrictions are required when entering power-down, as noted in the following figures.

Figure 103: Active Power-Down Entry and Exit Timing with CAL

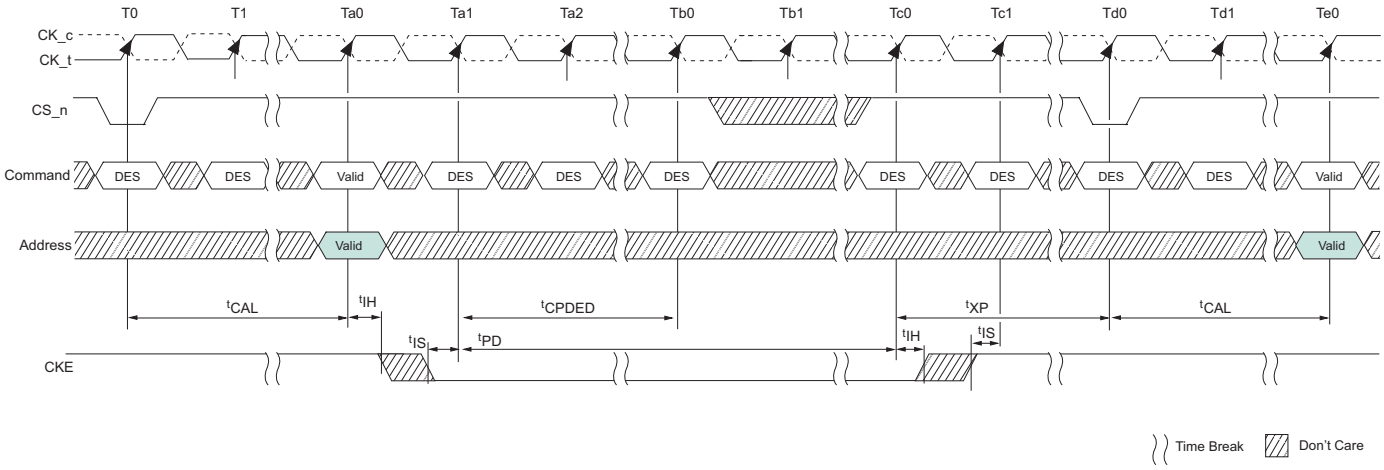

Micron Technology, Inc. reserves the right to change products or specifications without notice.
© 2018 Micron Technology, Inc. All rights reserved.

Figure 104: REFRESH Command to Power-Down Entry with CAL

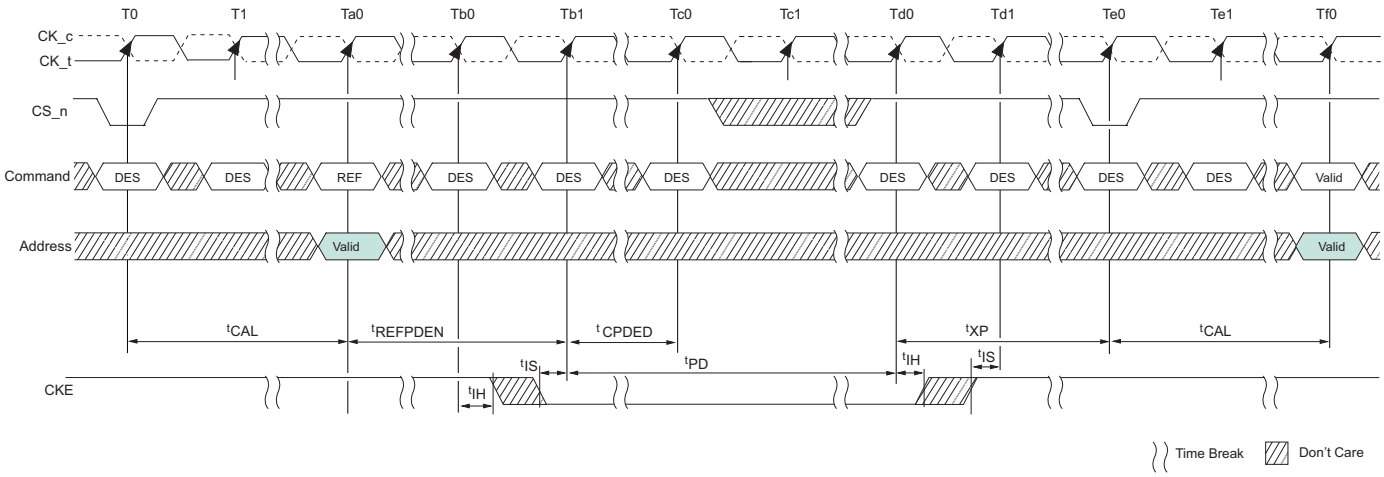

Micron Technology, Inc. reserves the right to change products or specifications without notice.
© 2018 Micron Technology, Inc. All rights reserved.

ODT Input Buffer Disable Mode for Power-Down

DRAM does not provide R_{TT_NOM} termination during power-down when ODT input buffer deactivation mode is enabled in MR5 bit A5.

To account for DRAM internal delay on CKE line to disable the ODT buffer and block the sampled output, the host controller must continuously drive ODT to either low or high when entering power down (from ^{t}DODTLoff+1 prior to CKE low till ^{t}CPDED after CKE low).

The ODT signal is allowed to float after ^{t}CPDEDmin has expired. In this mode, R_{TT_NOM} termination corresponding to sampled ODT at the input when CKE is registered low (and ^{t}ANPD before that) may be either R_{TT_NOM} or R_{TT_PARK}. ^{t}ANPD is equal to (WL-1) and is counted backwards from PDE.

Figure 105: ODT Power-Down Entry with ODT Buffer Disable Mode

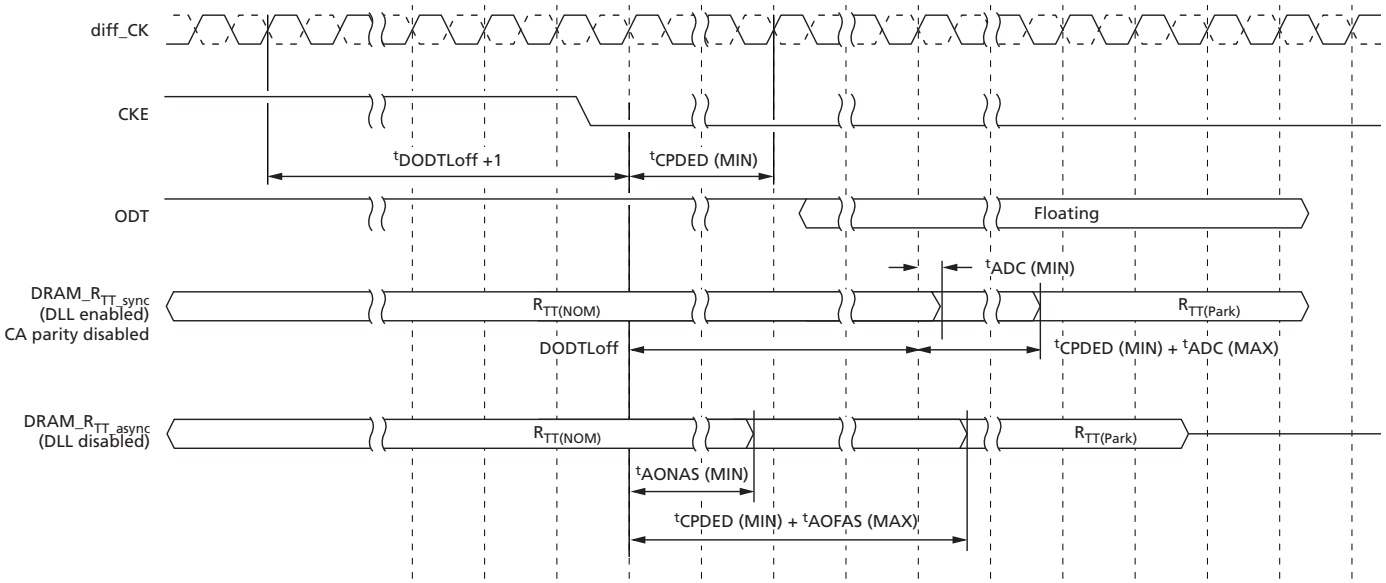

Micron Technology, Inc. reserves the right to change products or specifications without notice.
© 2018 Micron Technology, Inc. All rights reserved.

Figure 106: ODT Power-Down Exit with ODT Buffer Disable Mode

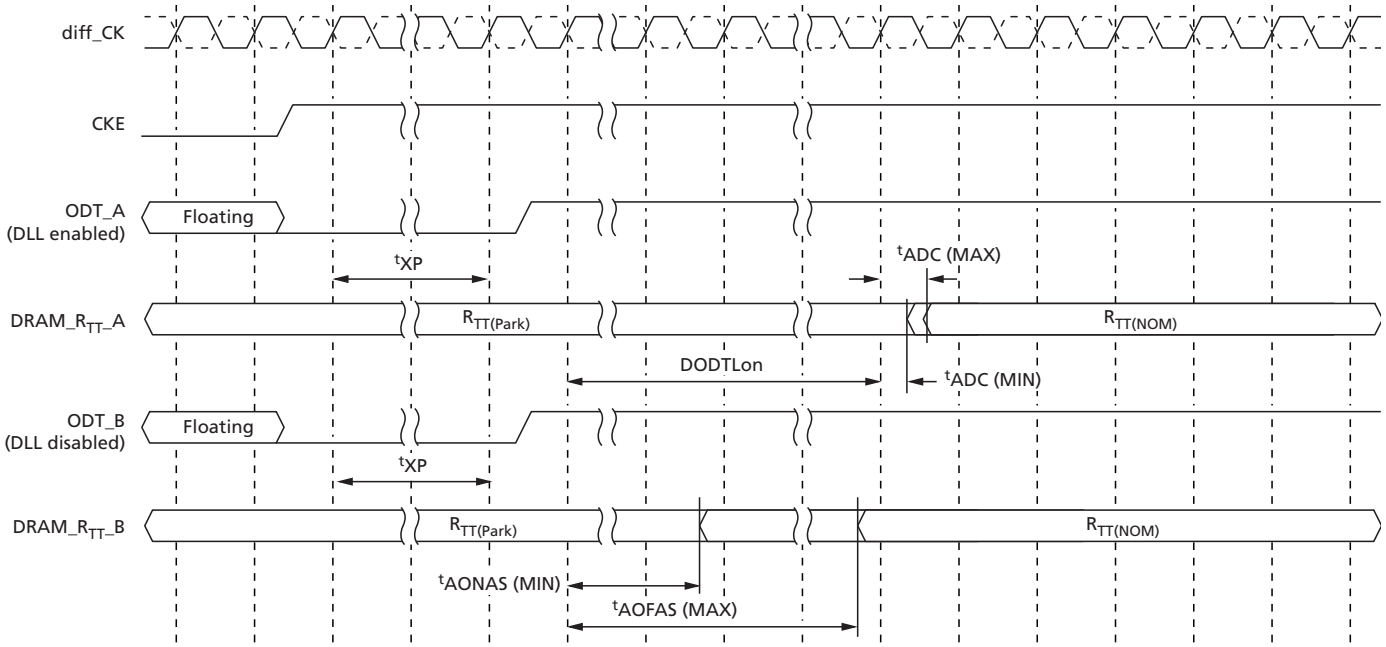

Micron Technology, Inc. reserves the right to change products or specifications without notice.
© 2018 Micron Technology, Inc. All rights reserved.

CRC Write Data Feature

CRC Write Data

The CRC write data feature takes the CRC generated data from the DRAM controller and compares it to the internally CRC generated data and determines whether the two match (no CRC error) or do not match (CRC error).

Figure 107: CRC Write Data Operation

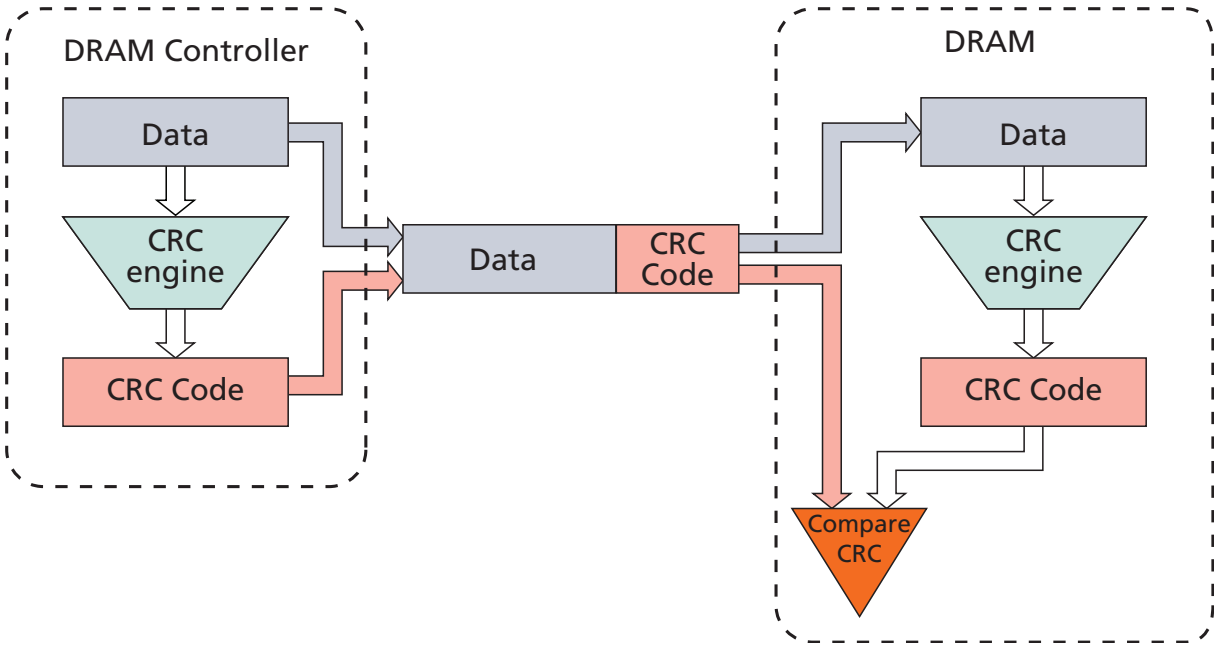

WRITE CRC DATA Operation

A DRAM controller generates a CRC checksum using a 72-bit CRC tree and forms the write data frames, as shown in the following CRC data mapping tables for the x4, x8, and x16 configurations. A x4 device has a CRC tree with 32 input data bits used, and the remaining upper 40 bits D[71:32] being 1s. A x8 device has a CRC tree with 64 input data bits used, and the remaining upper 8 bits dependant upon whether DM_n/DBI_n is used (1s are sent when not used). A x16 device has two identical CRC trees each, one for the lower byte and one for the upper byte, with 64 input data bits used by each, and the remaining upper 8 bits on each byte dependant upon whether DM_n/DBI_n is used (1s are sent when not used). For a x8 and x16 DRAMs, the DRAM memory controller must send 1s in transfer 9 location whether or not DM_n/DBI_n is used.

The DRAM checks for an error in a received code word D[71:0] by comparing the received checksum against the computed checksum and reports errors using the ALERT_n signal if there is a mismatch. The DRAM can write data to the DRAM core without waiting for the CRC check for full writes when DM is disabled. If bad data is written to the DRAM core, the DRAM memory controller will try to overwrite the bad data with good data; this means the DRAM controller is responsible for data coherency when DM is disabled. However, in the case where both CRC and DM are enabled via MRS (that is, persistent mode), the DRAM will not write bad data to the core when a CRC error is detected.

Micron Technology, Inc. reserves the right to change products or specifications without notice.
© 2018 Micron Technology, Inc. All rights reserved.

DBI_n and CRC Both Enabled

The DRAM computes the CRC for received written data D[71:0]. Data is not inverted back based on DBI before it is used for computing CRC. The data is inverted back based on DBI before it is written to the DRAM core.

DM_n and CRC Both Enabled

When both DM and write CRC are enabled in the DRAM mode register, the DRAM calculates CRC before sending the write data into the array. If there is a CRC error, the DRAM blocks the WRITE operation and discards the data. If a CRC error is encountered from a WRITE with auto precharge (WRA), the DRAM will not block the precharge. The *Nonconsecutive WRITE (BL8/BC4-OTF) with 2tCK Preamble and Write CRC in Same or Different Bank Group* and the *WRITE (BL8/BC4-OTF/Fixed) with 1tCK Preamble and Write CRC in Same or Different BankGroup* figures in the WRITE Operation section show timing differences when DM is enabled.

DM_n and DBI_n Conflict During Writes with CRC Enabled

Both write DBI_n and DM_n can not be enabled at the same time; read DBI_n and DM_n can be enabled at the same time.

CRC and Write Preamble Restrictions

When write CRC is enabled:

- And 1tCK WRITE preamble mode is enabled, a tCCD_S or tCCD_L of 4 clocks is not allowed.
- And 2tCK WRITE preamble mode is enabled, a tCCD_S or tCCD_L of 6 clocks is not allowed.

CRC Simultaneous Operation Restrictions

When write CRC is enabled, neither MPR writes nor per-DRAM mode is allowed.

CRC Polynomial

The CRC polynomial used by DDR4 is the ATM-8 HEC, $X^8 + X^2 + X^1 + 1$.

A combinatorial logic block implementation of this 8-bit CRC for 72 bits of data includes 272 two-input XOR gates contained in eight 6-XOR-gate-deep trees.

The CRC polynomial and combinatorial logic used by DDR4 is the same as used on GDDR5.

The error coverage from the DDR4 polynomial used is shown in the following table.

Table 54: CRC Error Detection Coverage

Error Type	Detection Capability
Random single-bit errors	100%
Random double-bit errors	100%
Random odd count errors	100%
Random multibit UI vertical column error detection excluding DBI bits	100%

Micron Technology, Inc. reserves the right to change products or specifications without notice.
© 2018 Micron Technology, Inc. All rights reserved.

CRC Combinatorial Logic Equations

```
module CRC8_D72;
// polynomial: (0 1 2 8)
// data width: 72
// convention: the first serial data bit is D[71]
//initial condition all 0 implied
// "^" = XOR
function [7:0]
nextCRC8_D72;
input [71:0] Data;
input [71:0] D;
reg [7:0] CRC;
begin
D = Data;

CRC[0] =
D[69]^D[68]^D[67]^D[66]^D[64]^D[63]^D[60]^D[56]^D[54]^D[53]^D[52]^D[50]^D[49]^D[48]^D[45]
^D[43]^D[40]^D[39]^D[35]^D[34]^D[31]^D[30]^D[28]^D[23]^D[21]^D[19]^D[18]^D[16]^D[14]^D[1
2]^D[8]^D[7]^D[6]^D[0];


CRC[1] =
D[70]^D[66]^D[65]^D[63]^D[61]^D[60]^D[57]^D[56]^D[55]^D[52]^D[51]^D[48]^D[46]^D[45]^D[44]
^D[43]^D[41]^D[39]^D[36]^D[34]^D[32]^D[30]^D[29]^D[28]^D[24]^D[23]^D[22]^D[21]^D[20]^D[1
8]^D[17]^D[16]^D[15]^D[14]^D[13]^D[12]^D[9]^D[6]^D[1]^D[0];


CRC[2] =
D[71]^D[69]^D[68]^D[63]^D[62]^D[61]^D[60]^D[58]^D[57]^D[54]^D[50]^D[48]^D[47]^D[46]^D[44]
^D[43]^D[42]^D[39]^D[37]^D[34]^D[33]^D[29]^D[28]^D[25]^D[24]^D[22]^D[17]^D[15]^D[13]^D[1
2]^D[10]^D[8]^D[6]^D[2]^D[1]^D[0];


CRC[3] =
D[70]^D[69]^D[64]^D[63]^D[62]^D[61]^D[59]^D[58]^D[55]^D[51]^D[49]^D[48]^D[47]^D[45]^D[44]
^D[43]^D[40]^D[38]^D[35]^D[34]^D[30]^D[29]^D[26]^D[25]^D[23]^D[18]^D[16]^D[14]^D[13]^D[1
1]^D[9]^D[7]^D[3]^D[2]^D[1];


CRC[4] =
D[71]^D[70]^D[65]^D[64]^D[63]^D[62]^D[60]^D[59]^D[56]^D[52]^D[50]^D[49]^D[48]^D[46]^D[45]
^D[44]^D[41]^D[39]^D[36]^D[35]^D[31]^D[30]^D[27]^D[26]^D[24]^D[19]^D[17]^D[15]^D[14]^D[1
2]^D[10]^D[8]^D[4]^D[3]^D[2];
```


Micron Technology, Inc. reserves the right to change products or specifications without notice.
© 2018 Micron Technology, Inc. All rights reserved.

CRC[5] =
D[71]^D[66]^D[65]^D[64]^D[63]^D[61]^D[60]^D[57]^D[53]^D[51]^D[50]^D[49]^D[47]^D[46]^D[45]^D[42]^D[40]^D[37]^D[36]^D[32]^D[31]^D[28]^D[27]^D[25]^D[20]^D[18]^D[16]^D[15]^D[13]^D[11]^D[9]^D[5]^D[4]^D[3];

CRC[6] =
D[67]^D[66]^D[65]^D[64]^D[62]^D[61]^D[58]^D[54]^D[52]^D[51]^D[50]^D[48]^D[47]^D[46]^D[43]^D[41]^D[38]^D[37]^D[33]^D[32]^D[29]^D[28]^D[26]^D[21]^D[19]^D[17]^D[16]^D[14]^D[12]^D[10]^D[6]^D[5]^D[4];

CRC[7] =
D[68]^D[67]^D[66]^D[65]^D[63]^D[62]^D[59]^D[55]^D[53]^D[52]^D[51]^D[49]^D[48]^D[47]^D[44]^D[42]^D[39]^D[38]^D[34]^D[33]^D[30]^D[29]^D[27]^D[22]^D[20]^D[18]^D[17]^D[15]^D[13]^D[11]^D[7]^D[6]^D[5];

nextCRC8_D72 = CRC;

Burst Ordering for BL8

DDR4 supports fixed WRITE burst ordering [A2:A1:A0 = 0:0:0] when write CRC is enabled in BL8 (fixed).

CRC Data Bit Mapping

Table 55: CRC Data Mapping for x4 Devices, BL8

Function	Transfer									
	0	1	2	3	4	5	6	7	8	9
DQ0	D0	D1	D2	D3	D4	D5	D6	D7	CRC0	CRC4
DQ1	D8	D9	D10	D11	D12	D13	D14	D15	CRC1	CRC5
DQ2	D16	D17	D18	D19	D20	D21	D22	D23	CRC2	CRC6
DQ3	D24	D25	D26	D27	D28	D29	D30	D31	CRC3	CRC7

Table 56: CRC Data Mapping for x8 Devices, BL8

Function	Transfer									
	0	1	2	3	4	5	6	7	8	9
DQ0	D0	D1	D2	D3	D4	D5	D6	D7	CRC0	1
DQ1	D8	D9	D10	D11	D12	D13	D14	D15	CRC1	1
DQ2	D16	D17	D18	D19	D20	D21	D22	D23	CRC2	1
DQ3	D24	D25	D26	D27	D28	D29	D30	D31	CRC3	1
DQ4	D32	D33	D34	D35	D36	D37	D38	D39	CRC4	1

Micron Technology, Inc. reserves the right to change products or specifications without notice.
© 2018 Micron Technology, Inc. All rights reserved.

Table 56: CRC Data Mapping for x8 Devices, BL8 (Continued)

Function	Transfer									
	0	1	2	3	4	5	6	7	8	9
DQ5	D40	D41	D42	D43	D44	D45	D46	D47	CRC5	1
DQ6	D48	D49	D50	D51	D52	D53	D54	D55	CRC6	1
DQ7	D56	D57	D58	D59	D60	D61	D62	D63	CRC7	1
DM_n/DBI_n	D64	D65	D66	D67	D68	D69	D70	D71	1	1

A x16 device is treated as two x8 devices; a x16 device will have two identical CRC trees implemented. CRC[7:0] covers data bits D[71:0], and CRC[15:8] covers data bits D[143:72].

Table 57: CRC Data Mapping for x16 Devices, BL8

Function	Transfer									
	0	1	2	3	4	5	6	7	8	9
DQ0	D0	D1	D2	D3	D4	D5	D6	D7	CRC0	1
DQ1	D8	D9	D10	D11	D12	D13	D14	D15	CRC1	1
DQ2	D16	D17	D18	D19	D20	D21	D22	D23	CRC2	1
DQ3	D24	D25	D26	D27	D28	D29	D30	D31	CRC3	1
DQ4	D32	D33	D34	D35	D36	D37	D38	D39	CRC4	1
DQ5	D40	D41	D42	D43	D44	D45	D46	D47	CRC5	1
DQ6	D48	D49	D50	D51	D52	D53	D54	D55	CRC6	1
DQ7	D56	D57	D58	D59	D60	D61	D62	D63	CRC7	1
LDM_n/LDBI_n	D64	D65	D66	D67	D68	D69	D70	D71	1	1
DQ8	D72	D73	D74	D75	D76	D77	D78	D79	CRC8	1
DQ9	D80	D81	D82	D83	D84	D85	D86	D87	CRC9	1
DQ10	D88	D89	D90	D91	D92	D93	D94	D95	CRC10	1
DQ11	D96	D97	D98	D99	D100	D101	D102	D103	CRC11	1
DQ12	D104	D105	D106	D107	D108	D109	D110	D111	CRC12	1
DQ13	D112	D113	D114	D115	D116	D117	D118	D119	CRC13	1
DQ14	D120	D121	D122	D123	D124	D125	D126	D127	CRC14	1
DQ15	D128	D129	D130	D131	D132	D133	D134	D135	CRC15	1
UDM_n/UDBI_n	D136	D137	D138	D139	D140	D141	D142	D143	1	1

CRC Enabled With BC4

If CRC and BC4 are both enabled, then address bit A2 is used to transfer critical data first for BC4 writes.

CRC with BC4 Data Bit Mapping

For a x4 device, the CRC tree inputs are 16 data bits, and the inputs for the remaining bits are 1.

Micron Technology, Inc. reserves the right to change products or specifications without notice.
© 2018 Micron Technology, Inc. All rights reserved.

When A2 = 1, data bits D[7:4] are used as inputs for D[3:0], D[15:12] are used as inputs to D[11:8], and so forth, for the CRC tree.

Table 58: CRC Data Mapping for x4 Devices, BC4

Function	Transfer									
	0	1	2	3	4	5	6	7	8	9
A2 = 0										
DQ0	D0	D1	D2	D3	1	1	1	1	CRC0	CRC4
DQ1	D8	D9	D10	D11	1	1	1	1	CRC1	CRC5
DQ2	D16	D17	D18	D19	1	1	1	1	CRC2	CRC6
DQ3	D24	D25	D26	D27	1	1	1	1	CRC3	CRC7
A2 = 1										
DQ0	D4	D5	D6	D7	1	1	1	1	CRC0	CRC4
DQ1	D12	D13	D14	D15	1	1	1	1	CRC1	CRC5
DQ2	D20	D21	D22	D23	1	1	1	1	CRC2	CRC6
DQ3	D28	D29	D30	D31	1	1	1	1	CRC3	CRC7

For a x8 device, the CRC tree inputs are 36 data bits.

When A2 = 0, the input bits D[67:64]) are used if DBI_n or DM_n functions are enabled; if DBI_n and DM_n are disabled, then D[67:64]) are 1.

When A2 = 1, data bits D[7:4] are used as inputs for D[3:0], D[15:12] are used as inputs to D[11:8], and so forth, for the CRC tree. The input bits D[71:68]) are used if DBI_n or DM_n functions are enabled; if DBI_n and DM_n are disabled, then D[71:68]) are 1.

Table 59: CRC Data Mapping for x8 Devices, BC4

Function	Transfer									
	0	1	2	3	4	5	6	7	8	9
A2 = 0										
DQ0	D0	D1	D2	D3	1	1	1	1	CRC0	1
DQ1	D8	D9	D10	D11	1	1	1	1	CRC1	1
DQ2	D16	D17	D18	D19	1	1	1	1	CRC2	1
DQ3	D24	D25	D26	D27	1	1	1	1	CRC3	1
DQ4	D32	D33	D34	D35	1	1	1	1	CRC4	1
DQ5	D40	D41	D42	D43	1	1	1	1	CRC5	1
DQ6	D48	D49	D50	D51	1	1	1	1	CRC6	1
DQ7	D56	D57	D58	D59	1	1	1	1	CRC7	1
DM_n/DBI_n	D64	D65	D66	D67	1	1	1	1	1	1
A2 = 1										
DQ0	D4	D5	D6	D7	1	1	1	1	CRC0	1
DQ1	D12	D13	D14	D15	1	1	1	1	CRC1	1
DQ2	D20	D21	D22	D23	1	1	1	1	CRC2	1
DQ3	D28	D29	D30	D31	1	1	1	1	CRC3	1

Micron Technology, Inc. reserves the right to change products or specifications without notice.
© 2018 Micron Technology, Inc. All rights reserved.

Table 59: CRC Data Mapping for x8 Devices, BC4 (Continued)

Function	Transfer									
	0	1	2	3	4	5	6	7	8	9
DQ4	D36	D37	D38	D39	1	1	1	1	CRC4	1
DQ5	D44	D45	D46	D47	1	1	1	1	CRC5	1
DQ6	D52	D53	D54	D55	1	1	1	1	CRC6	1
DQ7	D60	D61	D62	D63	1	1	1	1	CRC7	1
DM_n/DBI_n	D68	D69	D70	D71	1	1	1	1	1	1

There are two identical CRC trees for x16 devices, each have CRC tree inputs of 36 bits.

When A2 = 0, input bits D[67:64] are used if DBI_n or DM_n functions are enabled; if DBI_n and DM_n are disabled, then D[67:64] are 1s. The input bits D[139:136] are used if DBI_n or DM_n functions are enabled; if DBI_n and DM_n are disabled, then D[139:136] are 1s.

When A2 = 1, data bits D[7:4] are used as inputs for D[3:0], D[15:12] are used as inputs for D[11:8], and so forth, for the CRC tree. Input bits D[71:68] are used if DBI_n or DM_n functions are enabled; if DBI_n and DM_n are disabled, then D[71:68] are 1s. The input bits D[143:140] are used if DBI_n or DM_n functions are enabled; if DBI_n and DM_n are disabled, then D[143:140] are 1s.

Table 60: CRC Data Mapping for x16 Devices, BC4

Function	Transfer									
	0	1	2	3	4	5	6	7	8	9
A2 = 0										
DQ0	D0	D1	D2	D3	1	1	1	1	CRC0	1
DQ1	D8	D9	D10	D11	1	1	1	1	CRC1	1
DQ2	D16	D17	D18	D19	1	1	1	1	CRC2	1
DQ3	D24	D25	D26	D27	1	1	1	1	CRC3	1
DQ4	D32	D33	D34	D35	1	1	1	1	CRC4	1
DQ5	D40	D41	D42	D43	1	1	1	1	CRC5	1
DQ6	D48	D49	D50	D51	1	1	1	1	CRC6	1
DQ7	D56	D57	D58	D59	1	1	1	1	CRC7	1
LDM_n/LDBI_n	D64	D65	D66	D67	1	1	1	1	1	1
DQ8	D72	D73	D74	D75	1	1	1	1	CRC8	1
DQ9	D80	D81	D82	D83	1	1	1	1	CRC9	1
DQ10	D88	D89	D90	D91	1	1	1	1	CRC10	1
DQ11	D96	D97	D98	D99	1	1	1	1	CRC11	1
DQ12	D104	D105	D106	D107	1	1	1	1	CRC12	1
DQ13	D112	D113	D114	D115	1	1	1	1	CRC13	1
DQ14	D120	D121	D122	D123	1	1	1	1	CRC14	1
DQ15	D128	D129	D130	D131	1	1	1	1	CRC15	1
UDM_n/UDBI_n	D136	D137	D138	D139	1	1	1	1	1	1

Micron Technology, Inc. reserves the right to change products or specifications without notice.
© 2018 Micron Technology, Inc. All rights reserved.

Table 60: CRC Data Mapping for x16 Devices, BC4 (Continued)

Function	Transfer									
	0	1	2	3	4	5	6	7	8	9
A2 = 1										
DQ0	D4	D5	D6	D7	1	1	1	1	CRC0	1
DQ1	D12	D13	D14	D15	1	1	1	1	CRC1	1
DQ2	D20	D21	D22	D23	1	1	1	1	CRC2	1
DQ3	D28	D29	D30	D31	1	1	1	1	CRC3	1
DQ4	D36	D37	D38	D39	1	1	1	1	CRC4	1
DQ5	D44	D45	D46	D47	1	1	1	1	CRC5	1
DQ6	D52	D53	D54	D55	1	1	1	1	CRC6	1
DQ7	D60	D61	D62	D63	1	1	1	1	CRC7	1
LDM_n/LDBI_n	D68	D69	D70	D71	1	1	1	1	1	1
DQ8	D76	D77	D78	D79	1	1	1	1	CRC8	1
DQ9	D84	D85	D86	D87	1	1	1	1	CRC9	1
DQ10	D92	D93	D94	D95	1	1	1	1	CRC10	1
DQ11	D100	D101	D102	D103	1	1	1	1	CRC11	1
DQ12	D108	D109	D110	D111	1	1	1	1	CRC12	1
DQ13	D116	D117	D118	D119	1	1	1	1	CRC13	1
DQ14	D124	D125	D126	D127	1	1	1	1	CRC14	1
DQ15	D132	D133	D134	D135	1	1	1	1	CRC15	1
UDM_n/UDBI_n	D140	D141	D142	D143	1	1	1	1	1	1

CRC Equations for x8 Device in BC4 Mode with A2 = 0 and A2 = 1

The following example is of a CRC tree when x8 is used in BC4 mode (x4 and x16 CRC trees have similar differences).

CRC[0], A2=0 =
1^1^D[67]^D[66]^D[64]^1^1^D[56]^1^1^1^D[50]^D[49]^D[48]^1^D[43]^D[40]^1^D[35]^D[34]^1^1^1^1^1^D[19]^D[18]^D[16]^1^1^D[8] ^1^1^ D[0] ;

CRC[0], A2=1=
1^1^D[71]^D[70]^D[68]^1^1^D[60]^1^1^1^D[54]^D[53]^D[52]^1^D[47]^D[44]^1^D[39]^D[38]^1^1^1^1^1^D[23]^D[22]^D[20]^1^1^D[12]^1^1^D[4] ;

CRC[1], A2=0 =
1^D[66]^D[65]^1^1^1^D[57]^D[56]^1^1^D[51]^D[48]^1^1^1^D[43]^D[41]^1^1^D[34]^D[32]^1^1^1^D[24]^1^1^1^1^D[18]^D[17]^D[16]^1^1^1^1^D[9] ^1^ D[1]^D[0];

CRC[1], A2=1 =
1^D[70]^D[69]^1^1^1^D[61]^D[60]^1^1^D[55]^D[52]^1^1^1^D[47]^D[45]^1^1^D[38]^D[36]^1^1^1^D[28]^1^1^1^1^D[22]^D[21]^D[20]^1^1^1^1^D[13]^1^D[5]^D[4];

CRC[2], A2=0=
1^1^1^1^1^1^1^D[58]^D[57]^1^D[50]^D[48]^1^1^1^D[43]^D[42]^1^1^D[34]^D[33]^1^1^D[25]^D[24]^1^D[17]^1^1^1^D[10]^D[8] ^1^D[2]^D[1]^D[0];

Micron Technology, Inc. reserves the right to change products or specifications without notice.
© 2018 Micron Technology, Inc. All rights reserved.

CRC[2], A2=1=
1^1^1^1^1^1^1^D[62]^D[61]^1^D[54]^D[52]^1^1^1^D[47]^D[46]^1^1^D[38]^D[37]^1^1^D[29]^D[28]^1^D[21]^1^1^1^D[14]^D12]^1^D[6]^D[5]^D[4];

CRC[3], A2=0 =
1^1^D[64]^1^1^1^D[59]^D[58]^1^D[51]^D[49]^D[48]^1^1^1^D[43]^D[40]^1^D[35]^D[34]^1^1^D[26]^D[25]^1^D[18]^D[16]^1^1^D[11]^D[9] ^1^D[3]^D[2]^D[1];

CRC[3], A2=1 =
1^1^D[68]^1^1^1^D[63]^D[62]^1^D[55]^D[53]^D[52]^1^1^1^D[47]^D[44]^1^D[39]^D[38]^1^1^D[30]^D[29]^1^D[22]^D[20]^1^1^D[15]^D[13]^1^D[7]^D[6]^D[5];

CRC[4], A2=0 =
1^1^D[65]^D[64]^1^1^1^D[59]^D[56]^1^D[50]^D[49]^D[48]^1^1^1^D[41]^1^1^D[35]^1^1^D[27]^D[26]^D[24]^D[19]^D[17]^1^1^1^D[10]^D[8] ^1^D[3]^D[2];

CRC[4], A2=1 =
1^1^D[69]^D[68]^1^1^1^D[63]^D[60]^1^D[54]^D[53]^D[52]^1^1^1^D[45]^1^1^D[39]^1^1^D[31]^D[30]^D[28]^D[23]^D[21]^1^1^1^D[14]^D[12]^1^D[7]^D[6];

CRC[5], A2=0 =
1^D[66]^D[65]^D[64]^1^1^1^D[57]^1^D[51]^D[50]^D[49]^1^1^1^D[42]^D[40]^1^1^D[32]^1^1^D[27]^D[25]^1^D[18]^D[16]^1^1^D[11]^D[9] ^1^1^D[3];

CRC[5], A2=1 =
1^D[70]^D[69]^D[68]^1^1^1^D[61]^1^D[55]^D[54]^D[53]^1^1^1^D[46]^D[44]^1^1^D[36]^1^1^D[31]^D[29]^1^D[22]^D[20]^1^1^D[15]^D[13]^1^1^D[7];

CRC[6], A2=0 =
D[67]^D[66]^D[65]^D[64]^1^1^D[58]^1^1^D[51]^D[50]^D[48]^1^1^D[43]^D[41]^1^1^D[33]^D[32]^1^1^D[26]^1^D[19]^D[17]^D[16]^1^1^D[10]^1^1^1;

CRC[6], A2=1 =
D[71]^D[70]^D[69]^D[68]^1^1^D[62]^1^1^D[55]^D[54]^D[52]^1^1^D[47]^D[45]^1^1^D[37]^D[36]^1^1^D[30]^1^D[23]^D[21]^D[20]^1^1^D[14]^1^1^1;

CRC[7], A2=0=
1^D[67]^D[66]^D[65]^1^1^D[59]^1^1^1^D[51]^D[49]^D[48]^1^1^D[42]^1^1^D[34]^D[33]^1^1^D[27]^1^1^D[18]^D[17]^1^1^D[11]^1^1^1;

CRC[7], A2=1 =
1^D[71]^D[70]^D[69]^1^1^D[63]^1^1^1^D[55]^D[53]^D[52]^1^1^D[46]^1^1^D[38]^D[37]^1^1^D[31]^1^1^D[22]^D[21]^1^1^D[15]^1^1^1;

CRC Error Handling

The CRC error mechanism shares the same ALERT_n signal as CA parity for reporting write errors to the DRAM. The controller has two ways to distinguish between CRC errors and CA parity errors: 1) Read DRAM mode/MPR registers, and 2) Measure time ALERT_n is LOW. To speed up recovery for CRC errors, CRC errors are only sent back as a "short" pulse; the maximum pulse width is roughly ten clocks (unlike CA parity where ALERT_n is LOW longer than 45 clocks). The ALERT_n LOW could be longer than the maximum limit at the controller if there are multiple CRC errors as the ALERT_n signals are connected by a daisy chain bus. The latency to ALERT_n signal is defined as ^{t}CRC_ALERT in the following figure.

The DRAM will set the error status bit located at MR5[3] to a 1 upon detecting a CRC error, which will subsequently set the CRC error status flag in the MPR error log HIGH (MPR Page1, MPR3[7]). The CRC error status bit (and CRC error status flag) remains set at 1 until the DRAM controller clears the CRC error status bit using an MRS command to set MR5[3] to a 0. The DRAM controller, upon seeing an error as a pulse width, will retry the write transactions. The controller should consider the worst-case

Micron Technology, Inc. reserves the right to change products or specifications without notice.
© 2018 Micron Technology, Inc. All rights reserved.

delay for ALERT_n (during initialization) and backup the transactions accordingly. The DRAM controller may also be made more intelligent and correlate the write CRC error to a specific rank or a transaction.

Figure 108: CRC Error Reporting

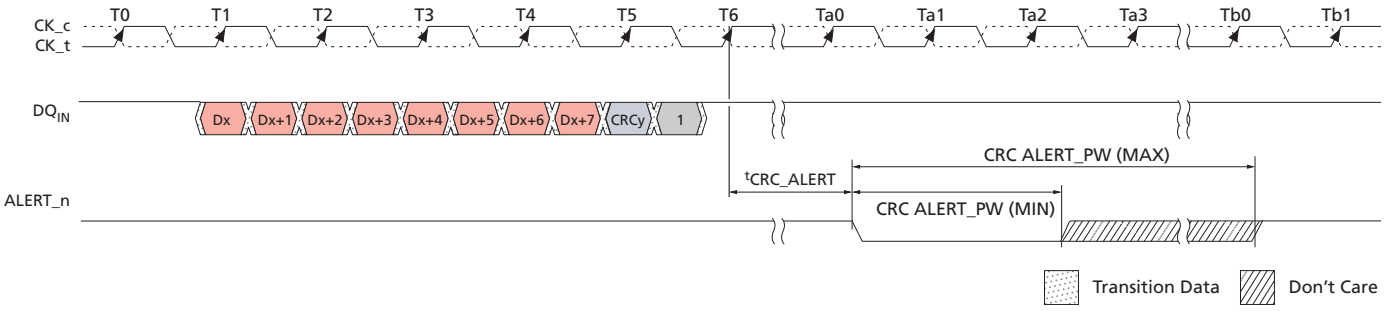

Notes: 1. D[71:1] CRC computed by DRAM did not match CRC[7:0] at T5 and started error generating process at T6.
2. CRC ALERT_PW is specified from the point where the DRAM starts to drive the signal LOW to the point where the DRAM driver releases and the controller starts to pull the signal up.
3. Timing diagram applies to x4, x8, and x16 devices.

Micron Technology, Inc. reserves the right to change products or specifications without notice.
© 2018 Micron Technology, Inc. All rights reserved.

CRC Write Data Flow Diagram

Figure 109: CA Parity Flow Diagram

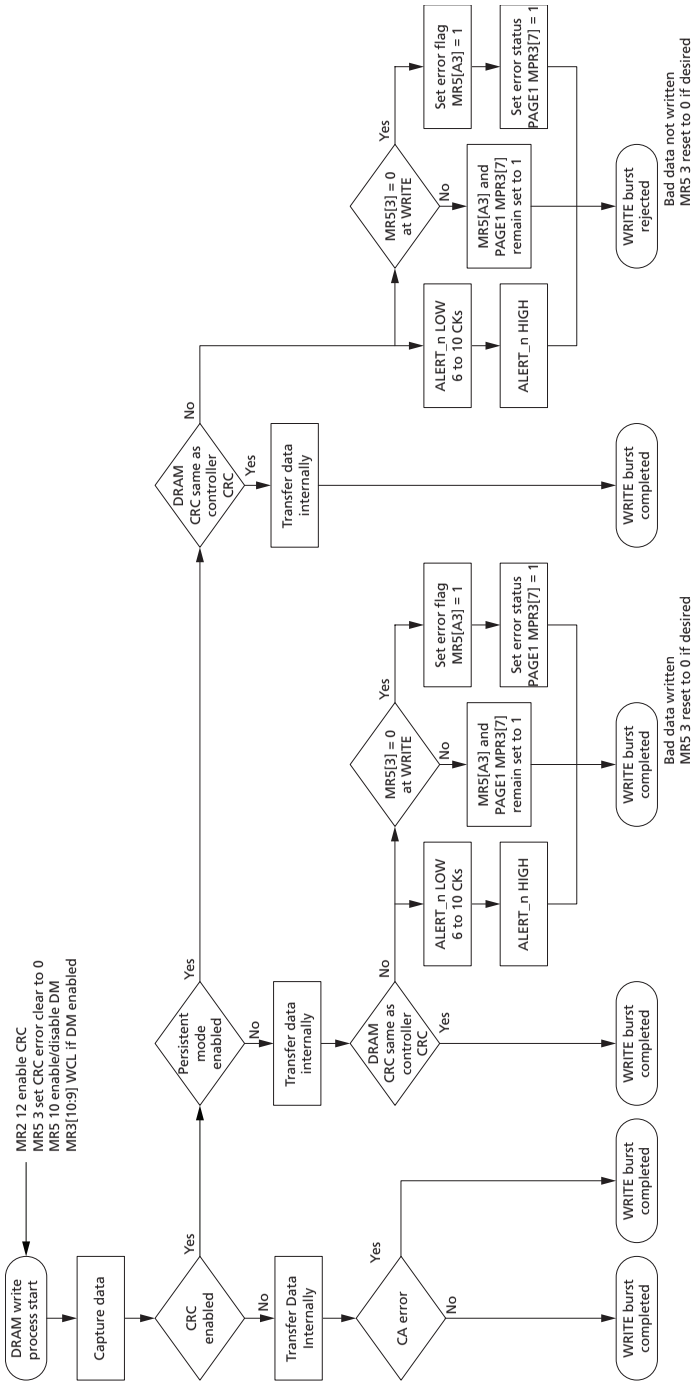

Micron Technology, Inc. reserves the right to change products or specifications without notice.
© 2018 Micron Technology, Inc. All rights reserved.

Data Bus Inversion

The DATA BUS INVERSION (DBI) function is supported only for x8 and x16 configurations (it is not supported on x4 devices). DBI opportunistically inverts data bits, and in conjunction with the DBI_n I/O, less than half of the DQs will switch LOW for a given DQS strobe edge. The DBI function shares a common pin with the DATA MASK (DM) and TDQS functions. The DBI function applies to either or both READ and WRITE operations: Write DBI cannot be enabled at the same time the DM function is enabled, and DBI is not allowed during MPR READ operation. Valid configurations for TDQS, DM, and DBI functions are shown below.

Table 61: DBI vs. DM vs. TDQS Function Matrix

Read DBI	Write DBI	Data Mask (DM)	TDQS (x8 only)
Enabled (or Disabled) **MR5[12]=1** (or MR5[12] = 0)	Disabled MR5[11] = 0	Disabled MR5[10] = 0	Disabled MR1[11] = 0
	Enabled MR5[11] = 1	Disabled MR5[10] = 0	Disabled MR1[11] = 0
	Disabled MR5[11] = 0	**Enabled** MR5[10] = 1	Disabled MR1[11] = 0
Disabled MR5[12] = 0	Disabled MR5[11] = 0	Disabled MR5[10] = 0	**Enabled** MR1[11] = 1

DBI During a WRITE Operation

If DBI_n is sampled LOW on a given byte lane during a WRITE operation, the DRAM inverts write data received on the DQ inputs prior to writing the internal memory array. If DBI_n is sampled HIGH on a given byte lane, the DRAM leaves the data received on the DQ inputs noninverted. The write DQ frame format is shown below for x8 and x16 configurations (the x4 configuration does not support the DBI function).

Table 62: DBI Write, DQ Frame Format (x8)

Function	Transfer							
	0	1	2	3	4	5	6	7
DQ[7:0]	Byte 0	Byte 1	Byte 2	Byte 3	Byte 4	Byte 5	Byte 6	Byte 7
DM_n or DBI_n	DM0 or DBI0	DM1 or DBI1	DM2 or DBI2	DM3 or DBI3	DM4 or DBI4	DM5 or DBI5	DM6 or DBI6	DM7 or DBI7

Table 63: DBI Write, DQ Frame Format (x16)

Function	Transfer, Lower (L) and Upper(U)							
	0	1	2	3	4	5	6	7
DQ[7:0]	LByte 0	LByte 1	LByte 2	LByte 3	LByte 4	LByte 5	LByte 6	LByte 7
LDM_n or LDBI_n	LDM0 or LDBI0	LDM1 or LDBI1	LDM2 or LDBI2	LDM3 or LDBI3	LDM4 or LDBI4	LDM5 or LDBI5	LDM6 or LDBI6	LDM7 or LDBI7
DQ[15:8]	UByte 0	UByte 1	UByte 2	UByte 3	UByte 4	UByte 5	UByte 6	UByte 7
UDM_n or UDBI_n	UDM0 or UDBI0	UDM1 or UDBI1	UDM2 or UDBI2	UDM3 or UDBI3	UDM4 or UDBI4	UDM5 or UDBI5	UDM6 or UDBI6	UDM7 or UDBI7

Micron Technology, Inc. reserves the right to change products or specifications without notice.
© 2018 Micron Technology, Inc. All rights reserved.

DBI During a READ Operation

If the number of 0 data bits within a given byte lane is greater than four during a READ operation, the DRAM inverts read data on its DQ outputs and drives the DBI_n pin LOW; otherwise, the DRAM does not invert the read data and drives the DBI_n pin HIGH. The read DQ frame format is shown below for x8 and x16 configurations (the x4 configuration does not support the DBI function).

Table 64: DBI Read, DQ Frame Format (x8)

Function	Transfer Byte							
	0	1	2	3	4	5	6	7
DQ[7:0]	Byte 0	Byte 1	Byte 2	Byte 3	Byte 4	Byte 5	Byte 6	Byte 7
DBI_n	DBI0	DBI1	DBI2	DBI3	DBI4	DBI5	DBI6	DBI7

Table 65: DBI Read, DQ Frame Format (x16)

Function	Transfer Byte, Lower (L) and Upper(U)							
	0	1	2	3	4	5	6	7
DQ[7:0]	LByte 0	LByte 1	LByte 2	LByte 3	LByte 4	LByte 5	LByte 6	LByte 7
LDBI_n	LDBI0	LDBI1	LDBI2	LDBI3	LDBI4	LDBI5	LDBI6	LDBI7
DQ[15:8]	UByte 0	UByte 1	UByte 2	UByte 3	UByte 4	UByte 5	UByte 6	UByte 7
UDBI_n	UDBI0	UDBI1	UDBI2	UDBI3	UDBI4	UDBI5	UDBI6	UDBI7

Micron Technology, Inc. reserves the right to change products or specifications without notice.
© 2018 Micron Technology, Inc. All rights reserved.

Data Mask

The DATA MASK (DM) function, also described as PARTIAL WRITE, is supported only for x8 and x16 configurations (it is not supported on x4 devices). The DM function shares a common pin with the DBI_n and TDQS functions. The DM function applies only to WRITE operations and cannot be enabled at the same time the WRITE DBI function is enabled. The valid configurations for the TDQS, DM, and DBI functions are shown here.

Table 66: DM vs. TDQS vs. DBI Function Matrix

Data Mask (DM)	TDQS (x8 only)	Write DBI	Read DBI
Enabled MR5[10] = 1	Disabled MR1[11] = 0	Disabled MR5[11] = 0	**Enabled** or Disabled MR5[12] = 1 or MR5[12] = 0
Disabled MR5[10] = 0	**Enabled** MR1[11] = 1	Disabled MR5[11] = 0	Disabled MR5[12] = 0
	Disabled MR1[11] = 0	**Enabled** MR5[11] = 1	**Enabled** or Disabled MR5[12] = 1 or MR5[12] = 0
	Disabled MR1[11] = 0	Disabled MR5[11] = 0	**Enabled** (or Disabled) MR5[12] = 1 (or MR5[12] = 0)

When enabled, the DM function applies during a WRITE operation. If DM_n is sampled LOW on a given byte lane, the DRAM masks the write data received on the DQ inputs. If DM_n is sampled HIGH on a given byte lane, the DRAM does not mask the data and writes this data into the DRAM core. The DQ frame format for x8 and x16 configurations is shown below. If both CRC write and DM are enabled (via MRS), the CRC will be checked and valid prior to the DRAM writing data into the DRAM core. If a CRC error occurs while the DM feature is enabled, CRC write persistent mode will be enabled and data will not be written into the DRAM core. In the case of CRC write enabled and DM disabled (via MRS), that is, CRC write nonpersistent mode, data is written to the DRAM core even if a CRC error occurs.

Table 67: Data Mask, DQ Frame Format (x8)

Function	Transfer							
	0	1	2	3	4	5	6	7
DQ[7:0]	Byte 0	Byte 1	Byte 2	Byte 3	Byte 4	Byte 5	Byte 6	Byte 7
DM_n or DBI_n	DM0 or DBI0	DM1 or DBI1	DM2 or DBI2	DM3 or DBI3	DM4 or DBI4	DM5 or DBI5	DM6 or DBI6	DM7 or DBI7

Table 68: Data Mask, DQ Frame Format (x16)

Function	Transfer, Lower (L) and Upper (U)							
	0	1	2	3	4	5	6	7
DQ[7:0]	LByte 0	LByte 1	LByte 2	LByte 3	LByte 4	LByte 5	LByte 6	LByte 7
LDM_n or LDBI_n	LDM0 or LDBI0	LDM1 or LDBI1	LDM2 or LDBI2	LDM3 or LDBI3	LDM4 or LDBI4	LDM5 or LDBI5	LDM6 or LDBI6	LDM7 or LDBI7
DQ[15:8]	UByte 0	UByte 1	UByte 2	UByte 3	UByte 4	UByte 5	UByte 6	UByte 7
UDM_n or UDBI_n	UDM0 or UDBI0	UDM1 or UDBI1	UDM2 or UDBI2	UDM3 or UDBI3	UDM4 or UDBI4	UDM5 or UDBI5	UDM6 or UDBI6	UDM7 or UDBI7

Micron Technology, Inc. reserves the right to change products or specifications without notice.
© 2018 Micron Technology, Inc. All rights reserved.

Programmable Preamble Modes and DQS Postambles

The device supports programmable WRITE and READ preamble modes, either the normal 1^{t}CK preamble mode or special 2^{t}CK preamble mode. The 2^{t}CK preamble mode places special timing constraints on many operational features as well as being supported for data rates of DDR4-2400 and faster. The WRITE preamble 1^{t}CK or 2^{t}CK mode can be selected independently from READ preamble 1^{t}CK or 2^{t}CK mode.

READ preamble training is also supported; this mode can be used by the DRAM controller to train or "read level" the DQS receivers.

There are ^{t}CCD restrictions under some circumstances:

- When 2^{t}CK READ preamble mode is enabled, a ^{t}CCD_S or ^{t}CCD_L of 5 clocks is not allowed.
- When 2^{t}CK WRITE preamble mode is enabled and write CRC is *not* enabled, a ^{t}CCD_S or ^{t}CCD_L of 5 clocks is not allowed.
- When 2^{t}CK WRITE preamble mode is enabled and write CRC is enabled, a ^{t}CCD_S or ^{t}CCD_L of 6 clocks is not allowed.

WRITE Preamble Mode

MR4[12] = 0 selects 1^{t}CK WRITE preamble mode while MR4[12] = 1 selects 2^{t}CK WRITE preamble mode. Examples are shown in the figures below.

Figure 110: 1^{t}CK vs. 2^{t}CK WRITE Preamble Mode

1^{t}CK Mode

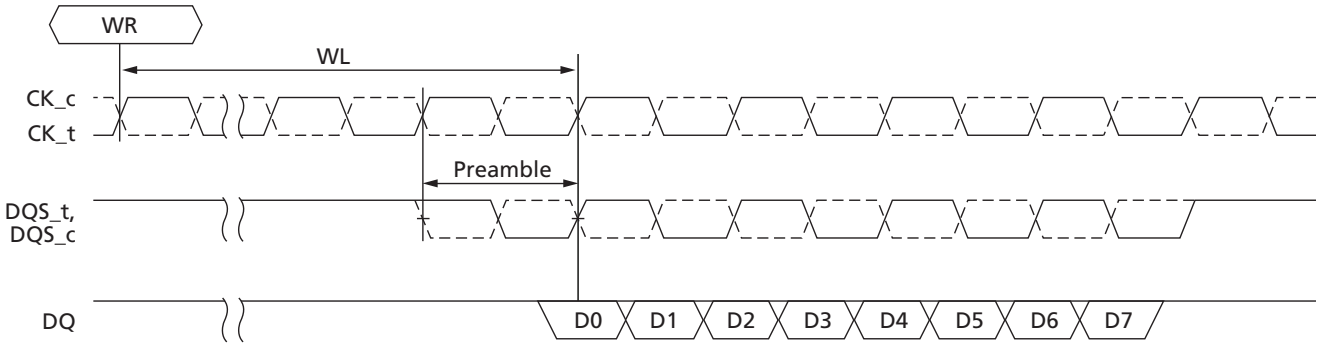

2^{t}CK Mode

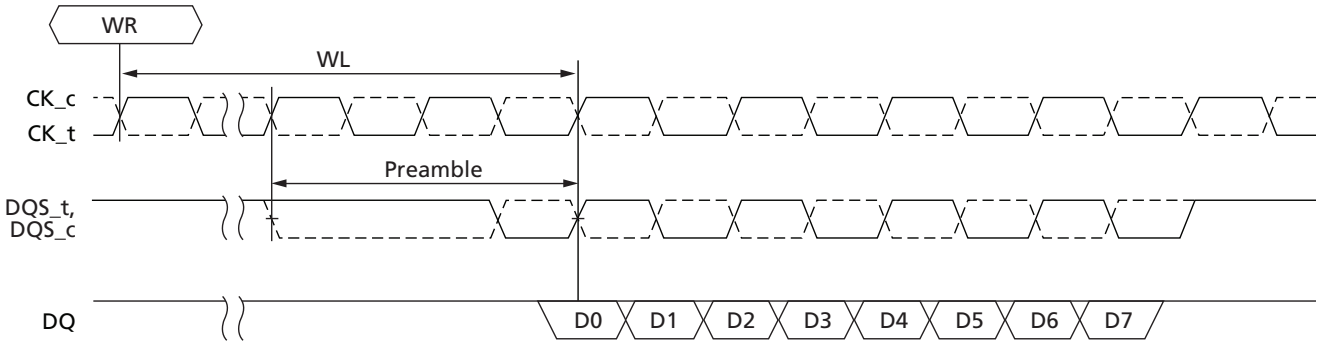

Micron Technology, Inc. reserves the right to change products or specifications without notice.
© 2018 Micron Technology, Inc. All rights reserved.

CWL has special considerations when in the 2tCK WRITE preamble mode. The CWL value selected in MR2[5:3], as seen in table below, requires at least one additional clock when the primary CWL value and 2tCK WRITE preamble mode are used; no additional clocks are required when the alternate CWL value and 2tCK WRITE preamble mode are used.

Table 69: CWL Selection

	CWL - Primary Choice		CWL - Alternate Choice	
Speed Bin	**1tCK Preamble**	**2tCK Preamble**	**1tCK Preamble**	**2tCK Preamble**
DDR4-1600	9	N/A	11	N/A
DDR4-1866	10	N/A	12	N/A
DDR4-2133	11	N/A	14	N/A
DDR4-2400	12	14	16	16
DDR4-2666	14	16	18	18
DDR4-2933	16	18	20	20
DDR4-3200	16	18	20	20

Note: 1. CWL programmable requirement for MR2[5:3].

When operating in 2tCK WRITE preamble mode, tWTR (command based) and tWR (MR0[11:9]) must be programmed to a value 1 clock greater than the tWTR and tWR setting normally required for the applicable speed bin to be JEDEC compliant; however, Micron's DDR4 DRAMs do not require these additional tWTR and tWR clocks. The CAS_n-to-CAS_n command delay to either a different bank group (tCCD_S) or the same bank group (tCCD_L) have minimum timing requirements that must be satisfied between WRITE commands and are stated in the Timing Parameters by Speed Bin tables.

Figure 111: 1tCK vs. 2tCK WRITE Preamble Mode, tCCD = 4

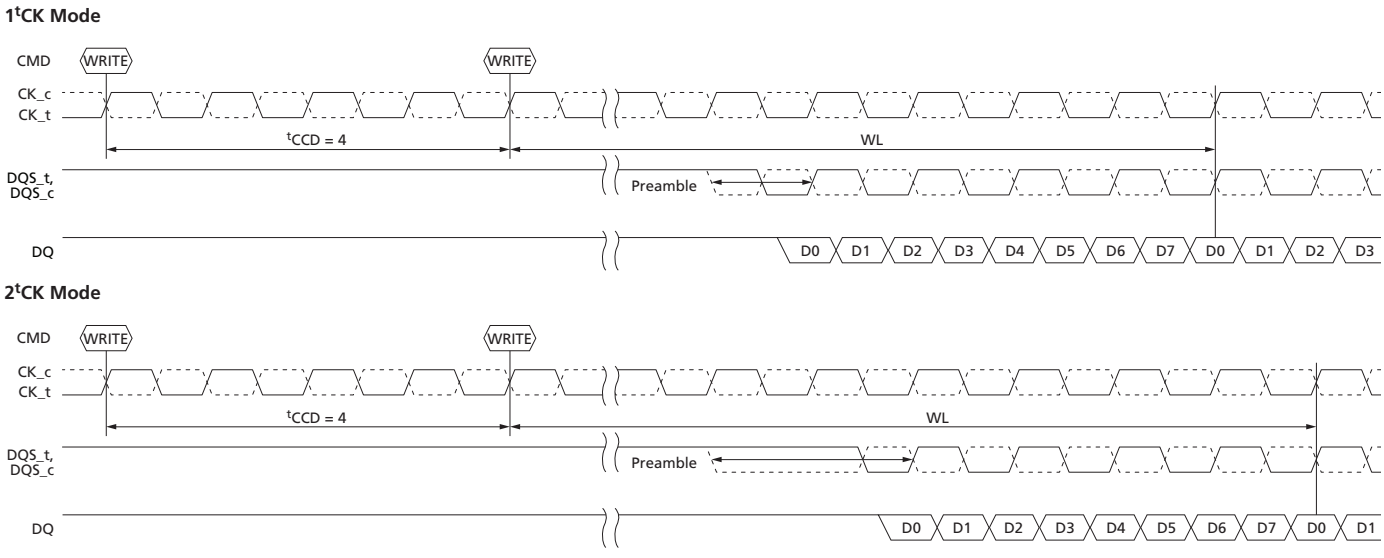

Micron Technology, Inc. reserves the right to change products or specifications without notice.
© 2018 Micron Technology, Inc. All rights reserved.

Figure 112: 1tCK vs. 2tCK WRITE Preamble Mode, tCCD = 5

1tCK Mode

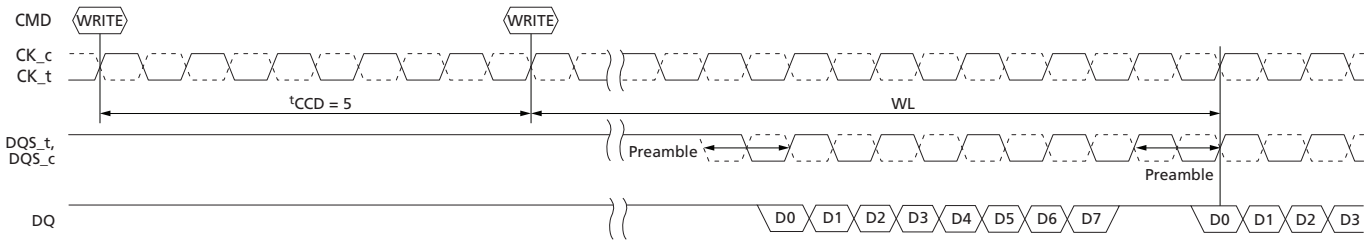

2tCK Mode: tCCD = 5 is not allowed in 2tCK mode.

Note: 1. tCCD_S and tCCD_L = 5 tCKs is not allowed when in 2tCK WRITE preamble mode.

Figure 113: 1tCK vs. 2tCK WRITE Preamble Mode, tCCD = 6

1tCK Mode

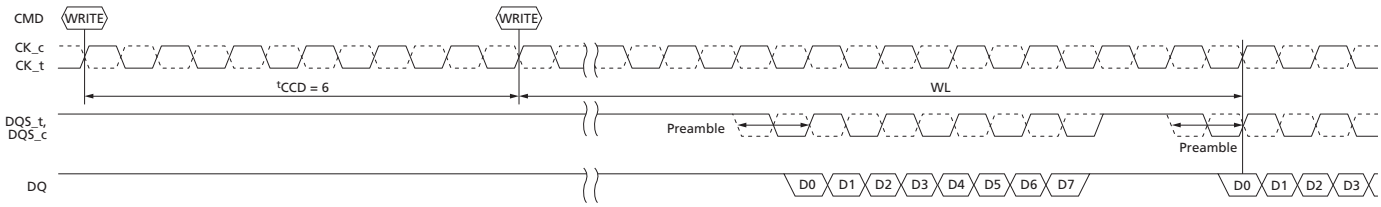

2tCK Mode

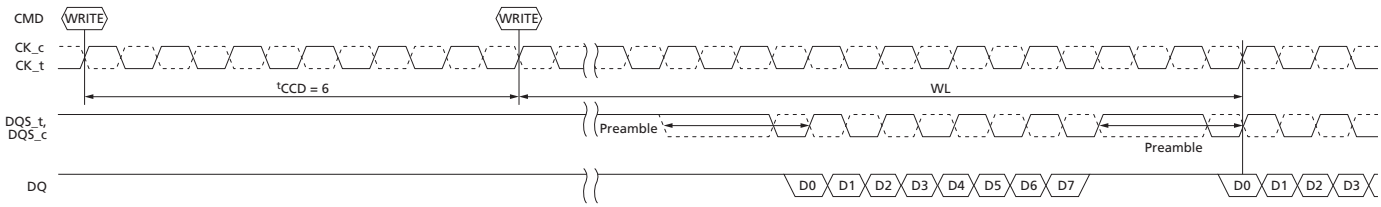

Micron Technology, Inc. reserves the right to change products or specifications without notice.
© 2018 Micron Technology, Inc. All rights reserved.

READ Preamble Mode

MR4[11] = 0 selects 1tCK READ preamble mode and MR4[11] = 1 selects 2tCK READ preamble mode. Examples are shown in the following figure.

Figure 114: 1tCK vs. 2tCK READ Preamble Mode

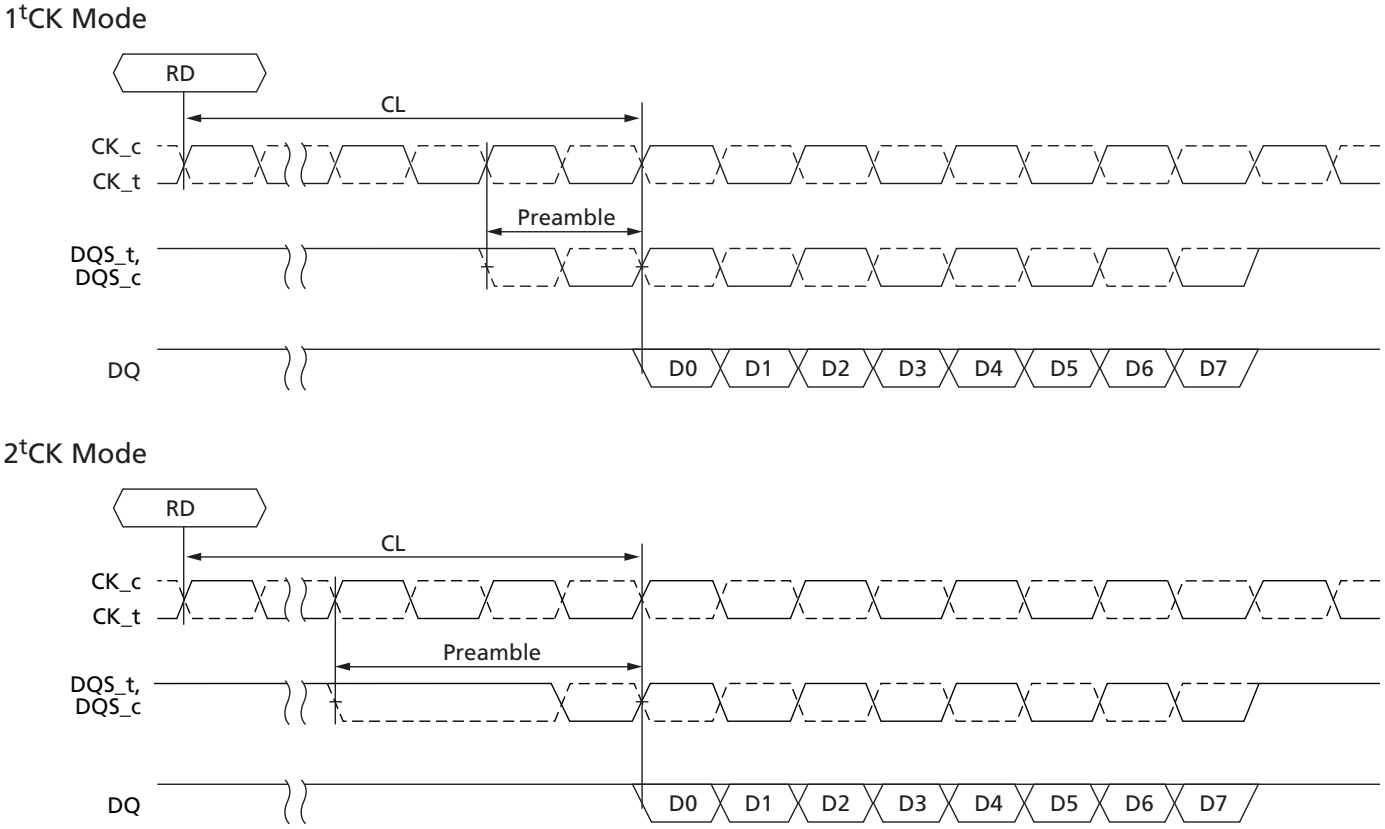

READ Preamble Training

DDR4 supports READ preamble training via MPR reads; that is, READ preamble training is allowed only when the DRAM is in the MPR access mode. The READ preamble training mode can be used by the DRAM controller to train or "read level" its DQS receivers. READ preamble training is entered via an MRS command (MR4[10] = 1 is enabled and MR4[10] = 0 is disabled). After the MRS command is issued to enable READ preamble training, the DRAM DQS signals are driven to a valid level by the time tSDO is satisfied. During this time, the data bus DQ signals are held quiet, that is, driven HIGH. The DQS_t signal remains driven LOW and the DQS_c signal remains driven HIGH until an MPR Page0 READ command is issued (MPR0 through MPR3 determine which pattern is used), and when CAS latency (CL) has expired, the DQS signals will toggle normally depending on the burst length setting. To exit READ preamble training mode, an MRS command must be issued, MR4[10] = 0.

Micron Technology, Inc. reserves the right to change products or specifications without notice.
© 2018 Micron Technology, Inc. All rights reserved.

Figure 115: READ Preamble Training

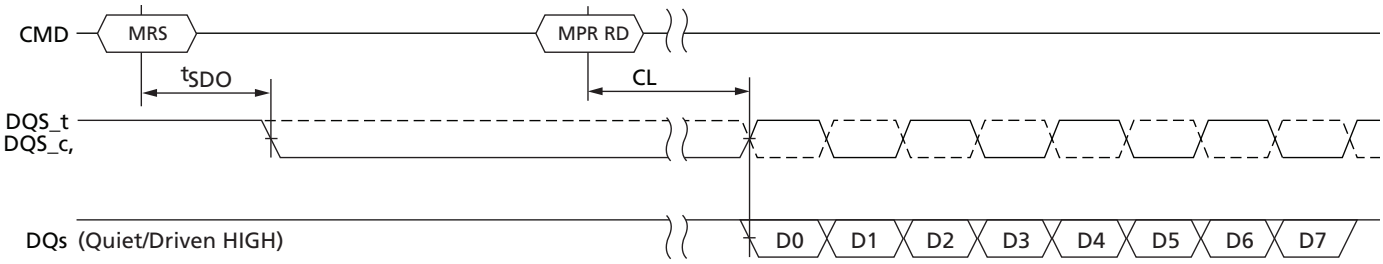

WRITE Postamble

Whether the 1tCK or 2tCK WRITE preamble mode is selected, the WRITE postamble remains the same at ½tCK.

Figure 116: WRITE Postamble

1tCK Mode

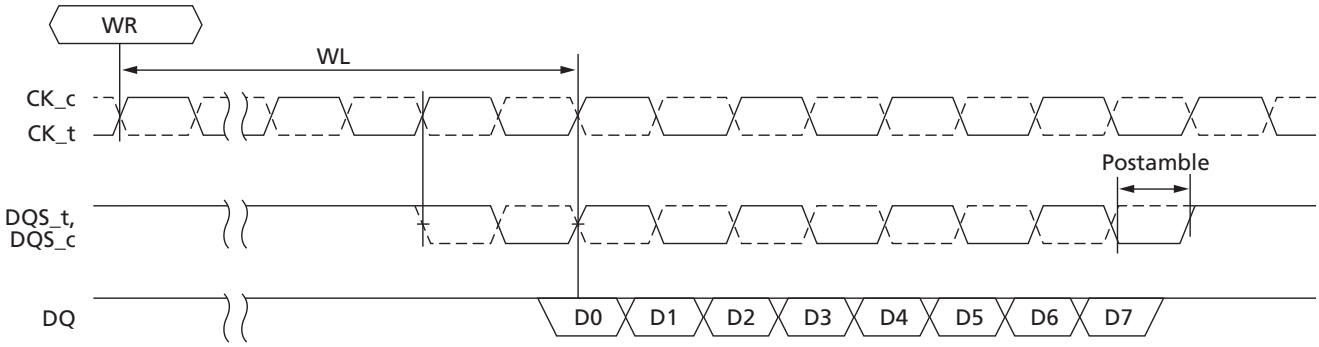

2tCK Mode

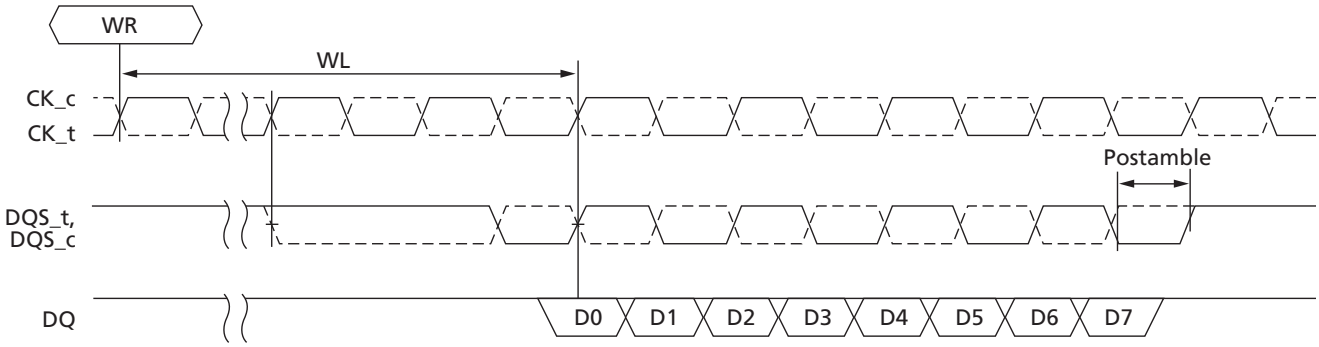

READ Postamble

Whether the 1tCK or 2tCK READ preamble mode is selected, the READ postamble remains the same at ½tCK.

Micron Technology, Inc. reserves the right to change products or specifications without notice.
© 2018 Micron Technology, Inc. All rights reserved.

Figure 117: READ Postamble

1tCK Mode

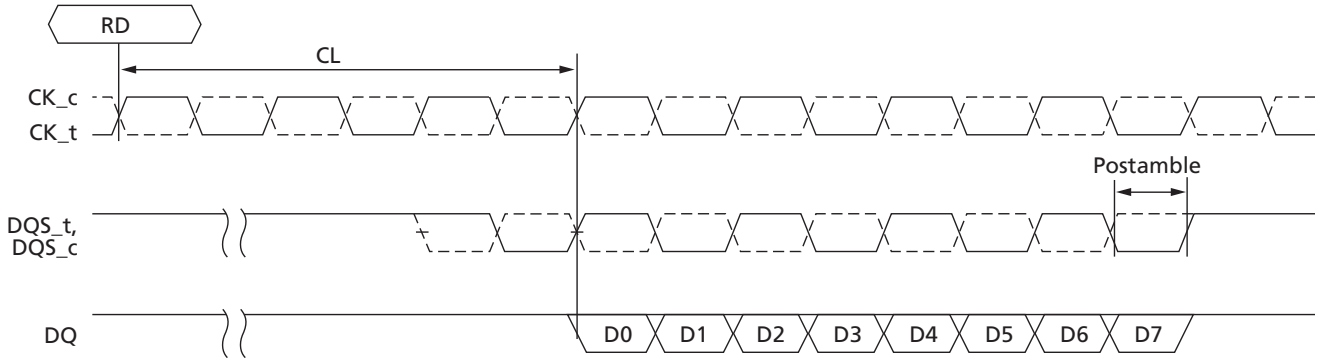

2tCK Mode

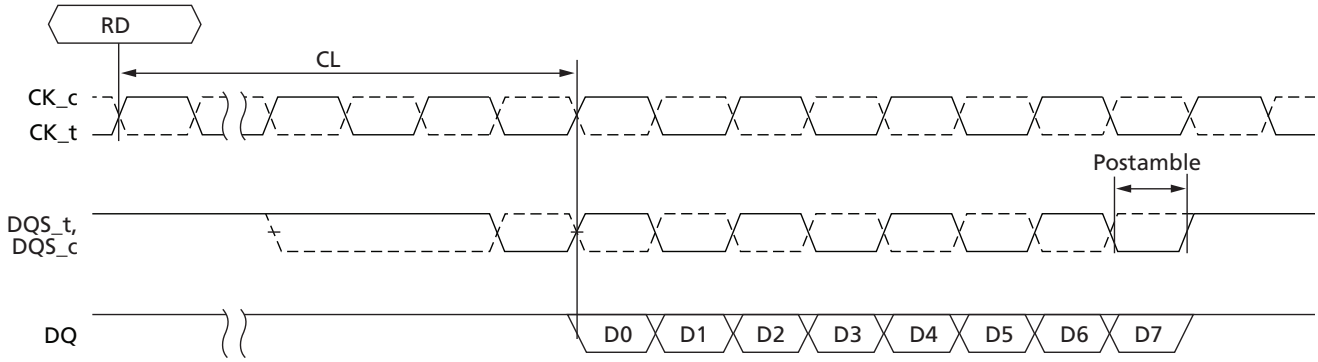

Micron Technology, Inc. reserves the right to change products or specifications without notice.
© 2018 Micron Technology, Inc. All rights reserved.

Bank Access Operation

DDR4 supports bank grouping: x4/x8 DRAMs have four bank groups (BG[1:0]), and each bank group is comprised of four subbanks (BA[1:0]); x16 DRAMs have two bank groups (BG[0]), and each bank group is comprised of four subbanks. Bank accesses to different banks' groups require less time delay between accesses than bank accesses to within the same bank's group. Bank accesses to different bank groups require ^{t}CCD_S (or short) delay between commands while bank accesses within the same bank group require ^{t}CCD_L (or long) delay between commands.

Figure 118: Bank Group x4/x8 Block Diagram

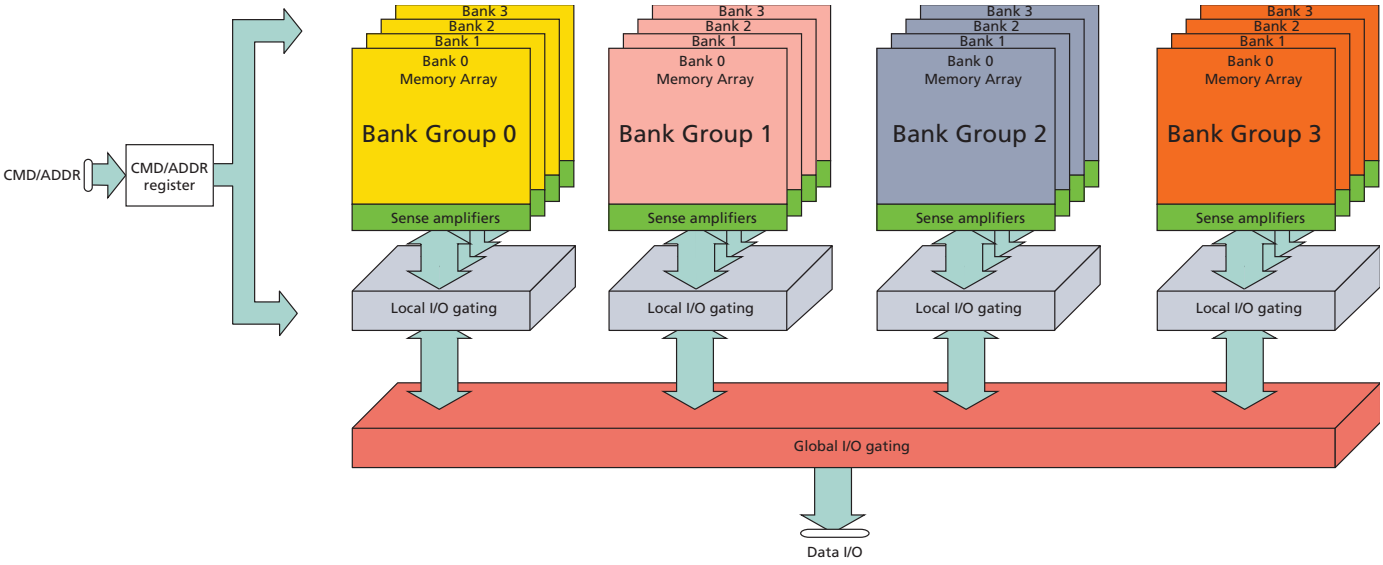

Notes: 1. Bank accesses to different bank groups require ^{t}CCD_S.
2. Bank accesses within the same bank group require ^{t}CCD_L.

Splitting the banks into bank groups with subbanks improved some bank access timings and increased others. However, considering DDR4 did not increase the prefetch from 8*n* to 16*n*, the penalty for staying 8*n* prefetch was significantly mitigated by using bank groups. The table below summarizes the timings affected (values listed as x*n*CK or yns means the larger of the two values).

Table 70: DDR4 Bank Group Timing Examples

Parameter	DDR4-1600	DDR4-2133	DDR4-2400
^{t}CCD_S	4*n*CK	4*n*CK	4*n*CK
^{t}CCD_L	4*n*CK or 6.25ns	4*n*CK or 5.355ns	4*n*CK or 5ns
^{t}RRD_S (½K)	4*n*CK or 5ns	4*n*CK or 3.7ns	4*n*CK or 3.3ns
^{t}RRD_L (½K)	4*n*CK or 6ns	4*n*CK or 5.3ns	4*n*CK or 4.9ns
^{t}RRD_S (1K)	4*n*CK or 5ns	4*n*CK or 3.7ns	4*n*CK or 3.3ns
^{t}RRD_L (1K)	4*n*CK or 6ns	4*n*CK or 5.3ns	4*n*CK or 4.9ns

Micron Technology, Inc. reserves the right to change products or specifications without notice.
© 2018 Micron Technology, Inc. All rights reserved.

Table 70: DDR4 Bank Group Timing Examples (Continued)

Parameter	DDR4-1600	DDR4-2133	DDR4-2400
^{t}RRD_S (2K)	4*n*CK or 6ns	4*n*CK or 5.3ns	4*n*CK or 5.3ns
^{t}RRD_L (2K)	4*n*CK or 7.5ns	4*n*CK or 6.4ns	4*n*CK or 6.4ns
^{t}WTR_S	2*n*CK or 2.5ns	2*n*CK or 2.5ns	2*n*CK or 2.5ns
^{t}WTR_L	4*n*CK or 7.5ns	4*n*CK or 7.5ns	4*n*CK or 7.5ns

Notes: 1. Refer to Timing Tables for actual specification values, these values are shown for reference only and are not verified for accuracy.
2. Timings with both *n*CK and ns require both to be satisfied; that is, the larger time of the two cases must be satisfied.

Figure 119: READ Burst ^{t}CCD_S and ^{t}CCD_L Examples

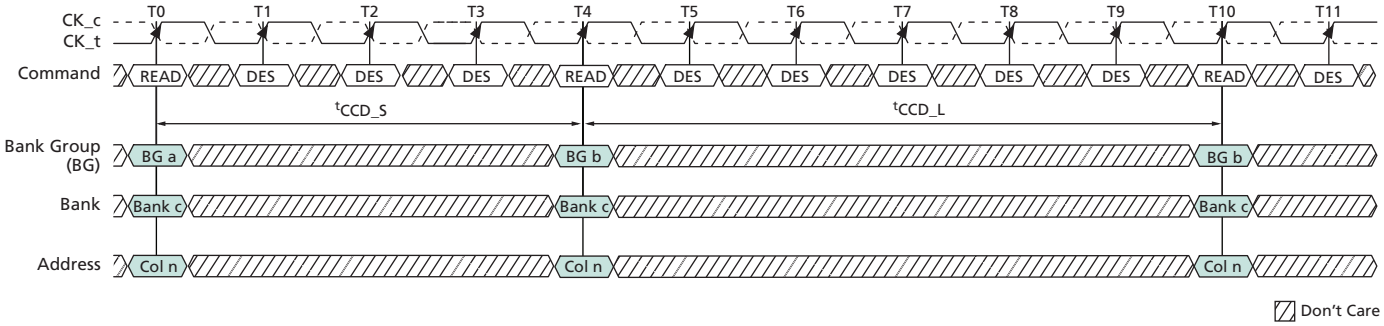

Notes: 1. ^{t}CCD_S; CAS_n-to-CAS_n delay (short). Applies to consecutive CAS_n to different bank groups (T0 to T4).
2. ^{t}CCD_L; CAS_n-to-CAS_n delay (long). Applies to consecutive CAS_n to the same bank group (T4 to T10).

Figure 120: Write Burst ^{t}CCD_S and ^{t}CCD_L Examples

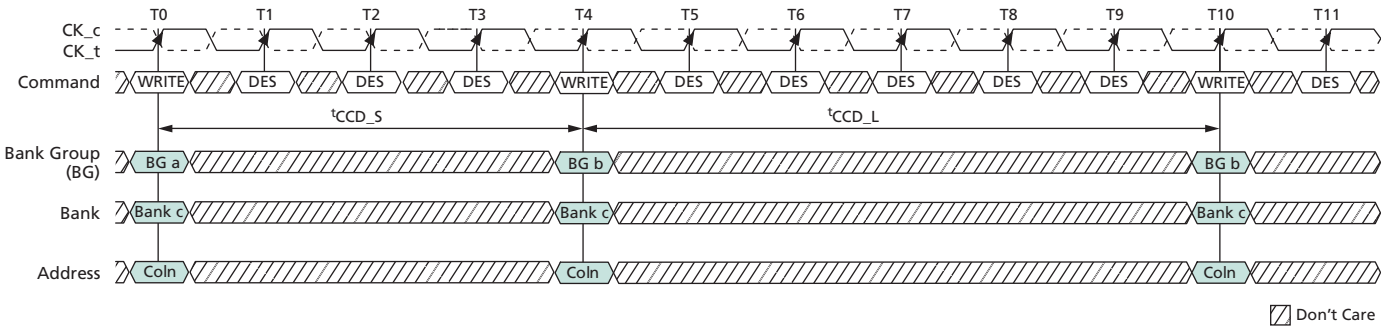

Notes: 1. ^{t}CCD_S; CAS_n-to-CAS_n delay (short). Applies to consecutive CAS_n to different bank groups (T0 to T4).
2. ^{t}CCD_L; CAS_n-to-CAS_n delay (long). Applies to consecutive CAS_n to the same bank group (T4 to T10).

Micron Technology, Inc. reserves the right to change products or specifications without notice.
© 2018 Micron Technology, Inc. All rights reserved.

Figure 121: tRRD Timing

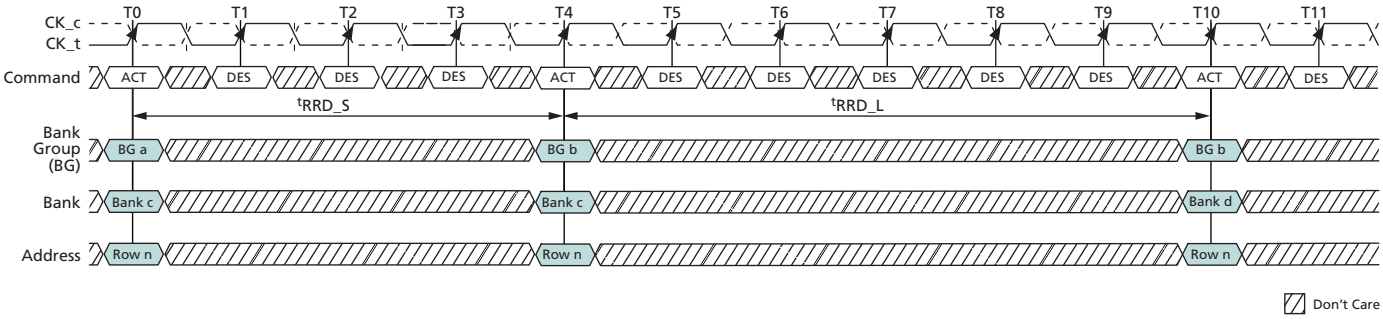

Notes: 1. tRRD_S; ACTIVATE-to-ACTIVATE command period (short); applies to consecutive ACTIVATE commands to different bank groups (T0 and T4).

2. tRRD_L; ACTIVATE-to-ACTIVATE command period (long); applies to consecutive ACTIVATE commands to the different banks in the same bank group (T4 and T10).

Micron Technology, Inc. reserves the right to change products or specifications without notice.
© 2018 Micron Technology, Inc. All rights reserved.

Figure 122: ^{t}WTR_S Timing (WRITE-to-READ, Different Bank Group, CRC and DM Disabled)

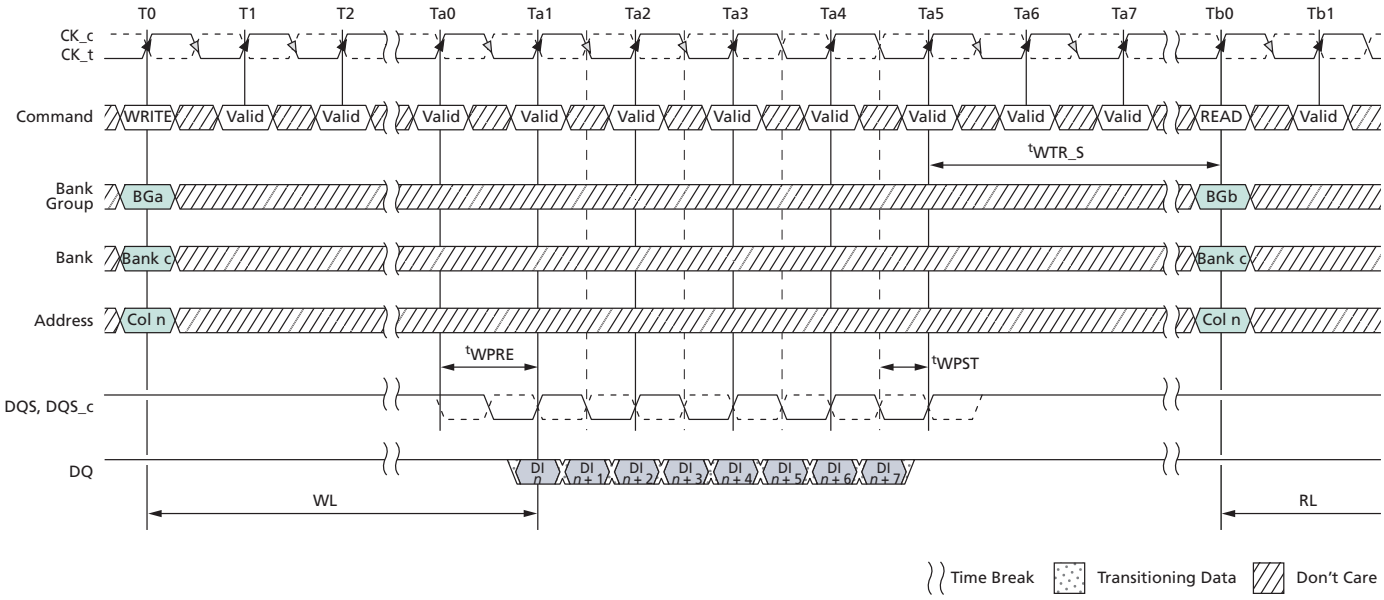

Note: 1. ^{t}WTR_S: delay from start of internal write transaction to internal READ command to a different bank group.

Figure 123: ^{t}WTR_L Timing (WRITE-to-READ, Same Bank Group, CRC and DM Disabled)

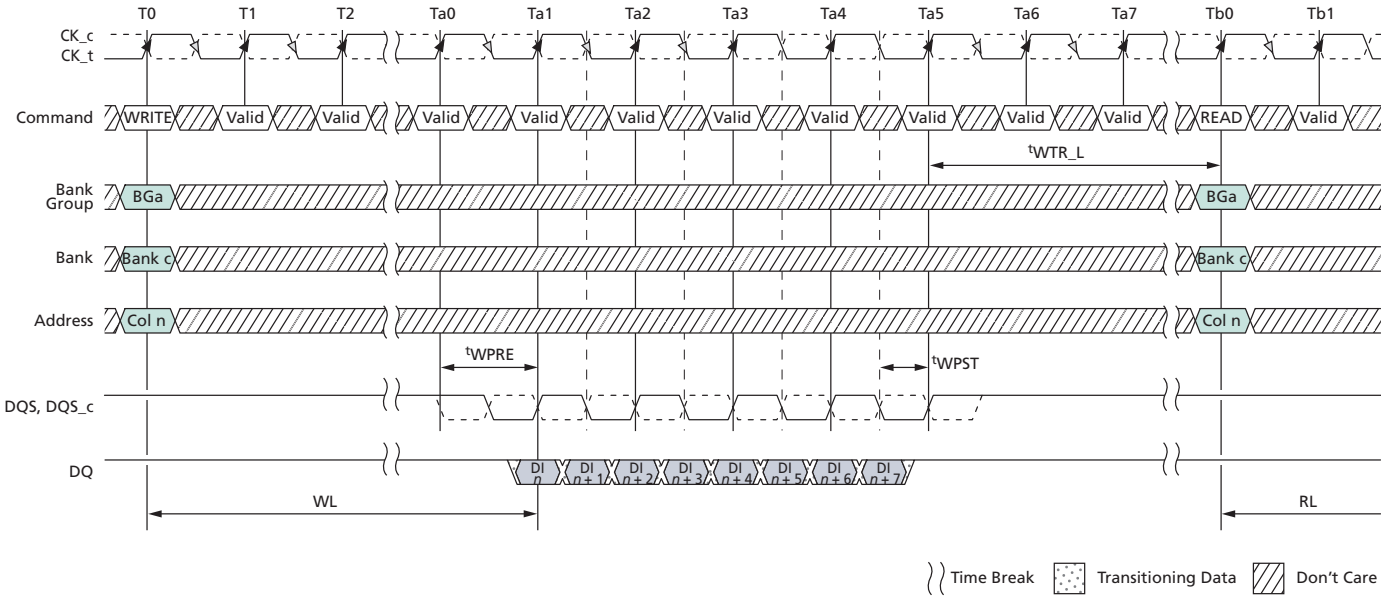

Note: 1. ^{t}WTR_L: delay from start of internal write transaction to internal READ command to the same bank group.

Micron Technology, Inc. reserves the right to change products or specifications without notice.
© 2018 Micron Technology, Inc. All rights reserved.

READ Operation

Read Timing Definitions

The read timings shown below are applicable in normal operation mode, that is, when the DLL is enabled and locked.

Note: ^{t}DQSQ = both rising/falling edges of DQS; no ^{t}AC defined.

Rising data strobe edge parameters:

- ^{t}DQSCK (MIN)/(MAX) describes the allowed range for a rising data strobe edge relative to CK.
- ^{t}DQSCK is the actual position of a rising strobe edge relative to CK.
- ^{t}QSH describes the DQS differential output HIGH time.
- ^{t}DQSQ describes the latest valid transition of the associated DQ pins.
- ^{t}QH describes the earliest invalid transition of the associated DQ pins.

Falling data strobe edge parameters:

- ^{t}QSL describes the DQS differential output LOW time.
- ^{t}DQSQ describes the latest valid transition of the associated DQ pins.
- ^{t}QH describes the earliest invalid transition of the associated DQ pins.

Micron Technology, Inc. reserves the right to change products or specifications without notice.
© 2018 Micron Technology, Inc. All rights reserved.

Figure 124: Read Timing Definition

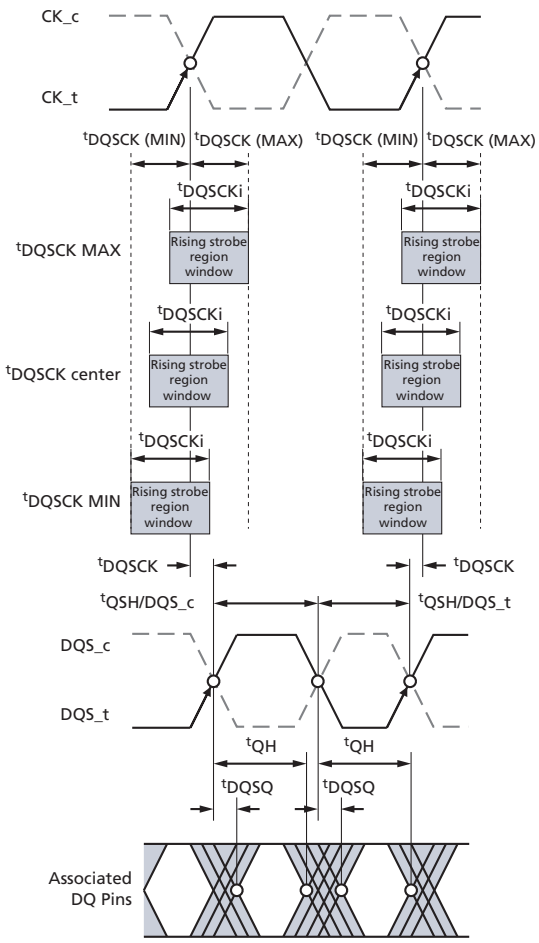

Table 71: Read-to-Write and Write-to-Read Command Intervals

Access Type	Bank Group	Timing Parameters	Note
Read-to-Write, minimum	Same	CL - CWL + RBL/2 + 1^{t}CK + ^{t}WPRE	1, 2
	Different	CL - CWL + RBL/2 + 1^{t}CK + ^{t}WPRE	1, 2
Write-to-Read, minimum	Same	CWL + WBL/2 + ^{t}WTR_L	1, 3
	Different	CWL + WBL/2 + ^{t}WTR_S	1, 3

Notes: 1. These timings require extended calibrations times ^{t}ZQinit and ^{t}ZQCS.
2. RBL: READ burst length associated with READ command, RBL = 8 for fixed 8 and on-the-fly mode 8 and RBL = 4 for fixed BC4 and on-the-fly mode BC4.
3. WBL: WRITE burst length associated with WRITE command, WBL = 8 for fixed 8 and on-the-fly mode 8 or BC4 and WBL = 4 for fixed BC4 only.

Read Timing – Clock-to-Data Strobe Relationship

The clock-to-data strobe relationship shown below is applicable in normal operation mode, that is, when the DLL is enabled and locked.

Rising data strobe edge parameters:

Micron Technology, Inc. reserves the right to change products or specifications without notice.
© 2018 Micron Technology, Inc. All rights reserved.

- ^{t}DQSCK (MIN)/(MAX) describes the allowed range for a rising data strobe edge relative to CK.
- ^{t}DQSCK is the actual position of a rising strobe edge relative to CK.
- ^{t}QSH describes the data strobe high pulse width.
- ^{t}HZ(DQS) DQS strobe going to high, nondrive level (shown in the postamble section of the figure below).

Falling data strobe edge parameters:

- ^{t}QSL describes the data strobe low pulse width.
- ^{t}LZ(DQS) DQS strobe going to low, initial drive level (shown in the preamble section of the figure below).

Figure 125: Clock-to-Data Strobe Relationship

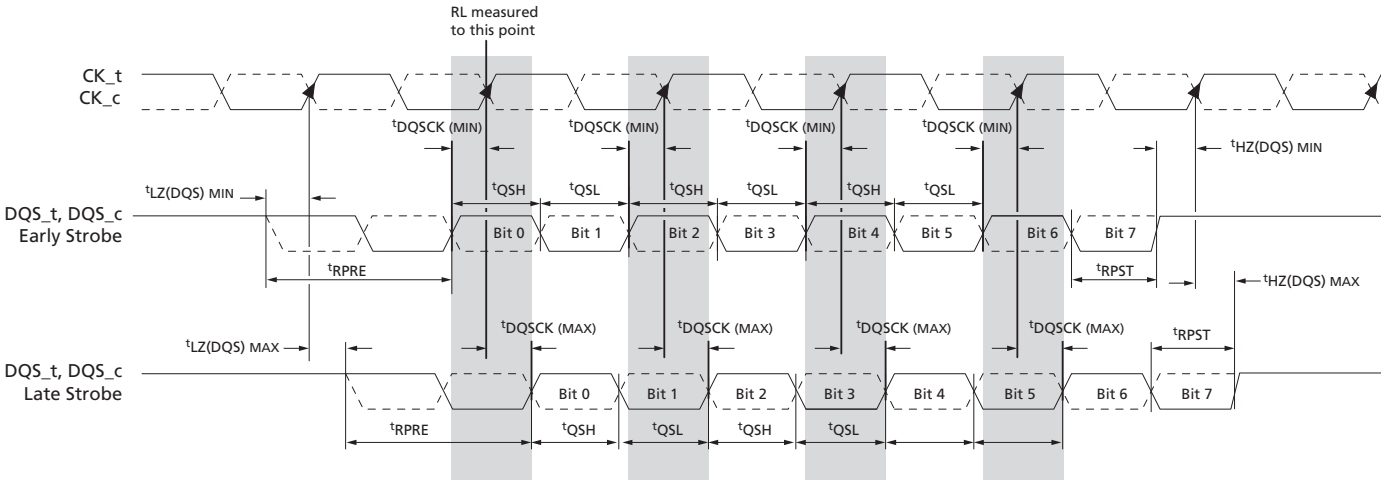

Notes: 1. Within a burst, the rising strobe edge will vary within ^{t}DQSCKi while at the same voltage and temperature. However, when the device, voltage, and temperature variations are incorporated, the rising strobe edge variance window can shift between ^{t}DQSCK (MIN) and ^{t}DQSCK (MAX).
A timing of this window's right edge (latest) from rising CK_t, CK_c is limited by a device's actual ^{t}DQSCK (MAX).
A timing of this window's left inside edge (earliest) from rising CK_t, CK_c is limited by ^{t}DQSCK (MIN).

2. Notwithstanding Note 1, a rising strobe edge with ^{t}DQSCK (MAX) at T(n) can not be immediately followed by a rising strobe edge with ^{t}DQSCK (MIN) at T(n + 1) because other timing relationships (^{t}QSH, ^{t}QSL) exist: if ^{t}DQSCK(n + 1) < 0: ^{t}DQSCK(n) < 1.0 ^{t}CK - (^{t}QSH (MIN) + ^{t}QSL (MIN)) - |^{t}DQSCK(n + 1) |.
3. The DQS_t, DQS_c differential output HIGH time is defined by ^{t}QSH, and the DQS_t, DQS_c differential output LOW time is defined by ^{t}QSL.
4. ^{t}LZ(DQS) MIN and ^{t}HZ(DQS) MIN are not tied to ^{t}DQSCK (MIN) (early strobe case), and ^{t}LZ(DQS) MAX and ^{t}HZ(DQS) MAX are not tied to ^{t}DQSCK (MAX) (late strobe case).
5. The minimum pulse width of READ preamble is defined by ^{t}RPRE (MIN).
6. The maximum READ postamble is bound by ^{t}DQSCK (MIN) plus ^{t}QSH (MIN) on the left side and ^{t}HZDSQ (MAX) on the right side.
7. The minimum pulse width of READ postamble is defined by ^{t}RPST (MIN).
8. The maximum READ preamble is bound by ^{t}LZDQS (MIN) on the left side and ^{t}DQSCK (MAX) on the right side.

Micron Technology, Inc. reserves the right to change products or specifications without notice.
© 2018 Micron Technology, Inc. All rights reserved.

Read Timing – Data Strobe-to-Data Relationship

The data strobe-to-data relationship is shown below and is applied when the DLL is enabled and locked.

Note: ^{t}DQSQ: both rising/falling edges of DQS; no ^{t}AC defined.

Rising data strobe edge parameters:

- ^{t}DQSQ describes the latest valid transition of the associated DQ pins.
- ^{t}QH describes the earliest invalid transition of the associated DQ pins.

Falling data strobe edge parameters:

- ^{t}DQSQ describes the latest valid transition of the associated DQ pins.
- ^{t}QH describes the earliest invalid transition of the associated DQ pins.

Data valid window parameters:

- ^{t}DVWd is the Data Valid Window per device per UI and is derived from [^{t}QH - ^{t}DQSQ] of each UI on a given DRAM
- ^{t}DVWp is the Data Valid Window per pin per UI and is derived [^{t}QH - ^{t}DQSQ] of each UI on a pin of a given DRAM

Figure 126: Data Strobe-to-Data Relationship

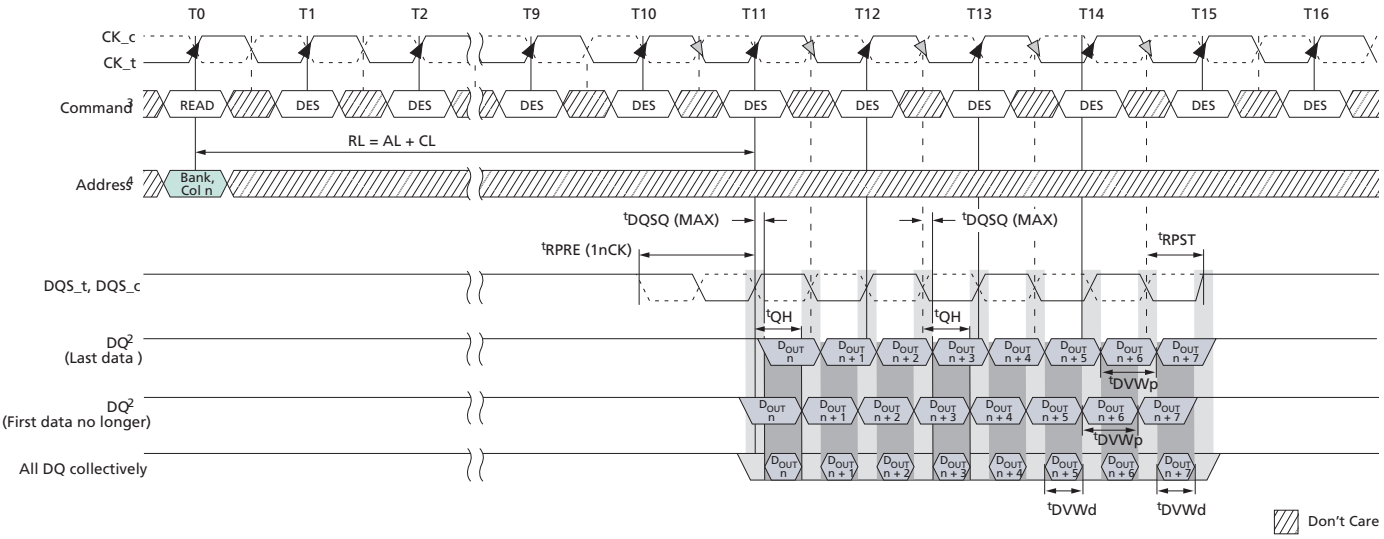

Notes: 1. BL = 8, RL = 11 (AL = 0, CL = 1), Premable = 1^{t}CK.
2. D_{OUT} *n* = data-out from column *n*.
3. DES commands are shown for ease of illustration; other commands may be valid at these times.
4. BL8 setting activated by either MR0[A1:0 = 00] or MR0[A1:0 = 01] and A12 = 1 during READ commands at T0.
5. Output timings are referenced to V_{DDQ}, and DLL on for locking.
6. ^{t}DQSQ defines the skew between DQS to data and does not define DQS to clock.
7. Early data transitions may not always happen at the same DQ. Data transitions of a DQ can vary (either early or late) within a burst.

Micron Technology, Inc. reserves the right to change products or specifications without notice.
© 2018 Micron Technology, Inc. All rights reserved.

tLZ(DQS), tLZ(DQ), tHZ(DQS), and tHZ(DQ) Calculations

tHZ and tLZ transitions occur in the same time window as valid data transitions. These parameters are referenced to a specific voltage level that specifies when the device output is no longer driving tHZ(DQS) and tHZ(DQ), or begins driving tLZ(DQS) and tLZ(DQ). The figure below shows a method to calculate the point when the device is no longer driving tHZ(DQS) and tHZ(DQ), or begins driving tLZ(DQS) and tLZ(DQ), by measuring the signal at two different voltages. The actual voltage measurement points are not critical as long as the calculation is consistent. tLZ(DQS), tLZ(DQ), tHZ(DQS), and tHZ(DQ) are defined as singled-ended parameters.

Figure 127: tLZ and tHZ Method for Calculating Transitions and Endpoints

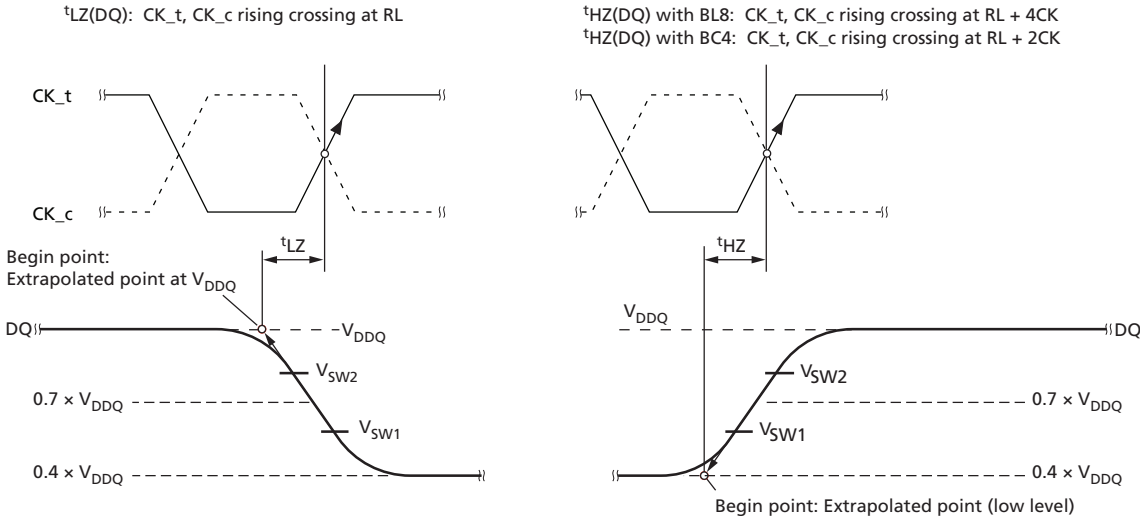

Notes: 1. V_{SW1} = (0.70 - 0.04) × V_{DDQ} for both tLZ and tHZ.
2. V_{SW2} = (0.70 + 0.04) × V_{DDQ} for both tLZ and tHZ.
3. Extrapolated point (low level) = V_{DDQ}/(50 + 34) × 34 = 0.4 × V_{DDQ}
Driver impedance = RZQ/7 = 34Ω
V_{TT} test load = 50Ω to V_{DDQ}.

Micron Technology, Inc. reserves the right to change products or specifications without notice.
© 2018 Micron Technology, Inc. All rights reserved.

^{t}RPRE Calculation

Figure 128: ^{t}RPRE Method for Calculating Transitions and Endpoints

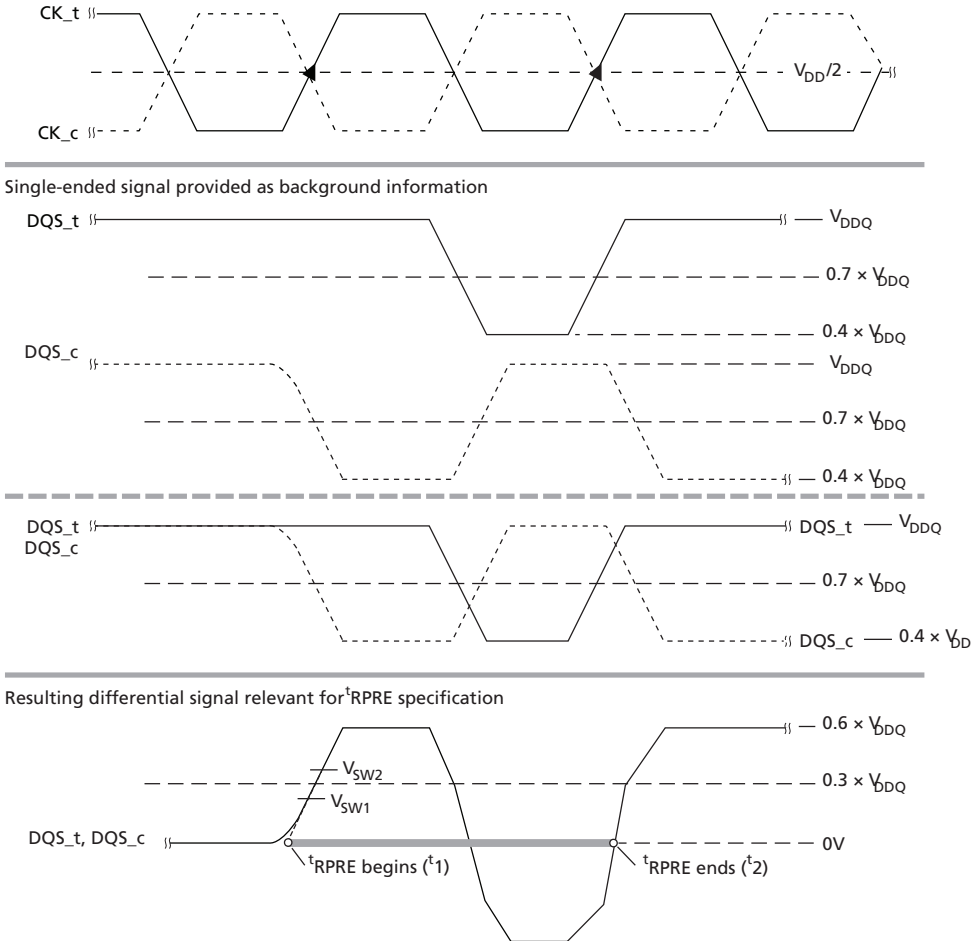

Notes: 1. V_{sw1} = (0.3 - 0.04) × V_{DDQ}.
2. V_{sw2} = (0.30 + 0.04) × V_{DDQ}.
3. DQS_t and DQS_c low level = V_{DDQ}/(50 + 34) × 34 = 0.4 × V_{DDQ}
   Driver impedance = RZQ/7 = 34Ω
   V_{TT} test load = 50Ω to V_{DDQ}.

Micron Technology, Inc. reserves the right to change products or specifications without notice.
© 2018 Micron Technology, Inc. All rights reserved.

^{t}RPST Calculation

Figure 129: ^{t}RPST Method for Calculating Transitions and Endpoints

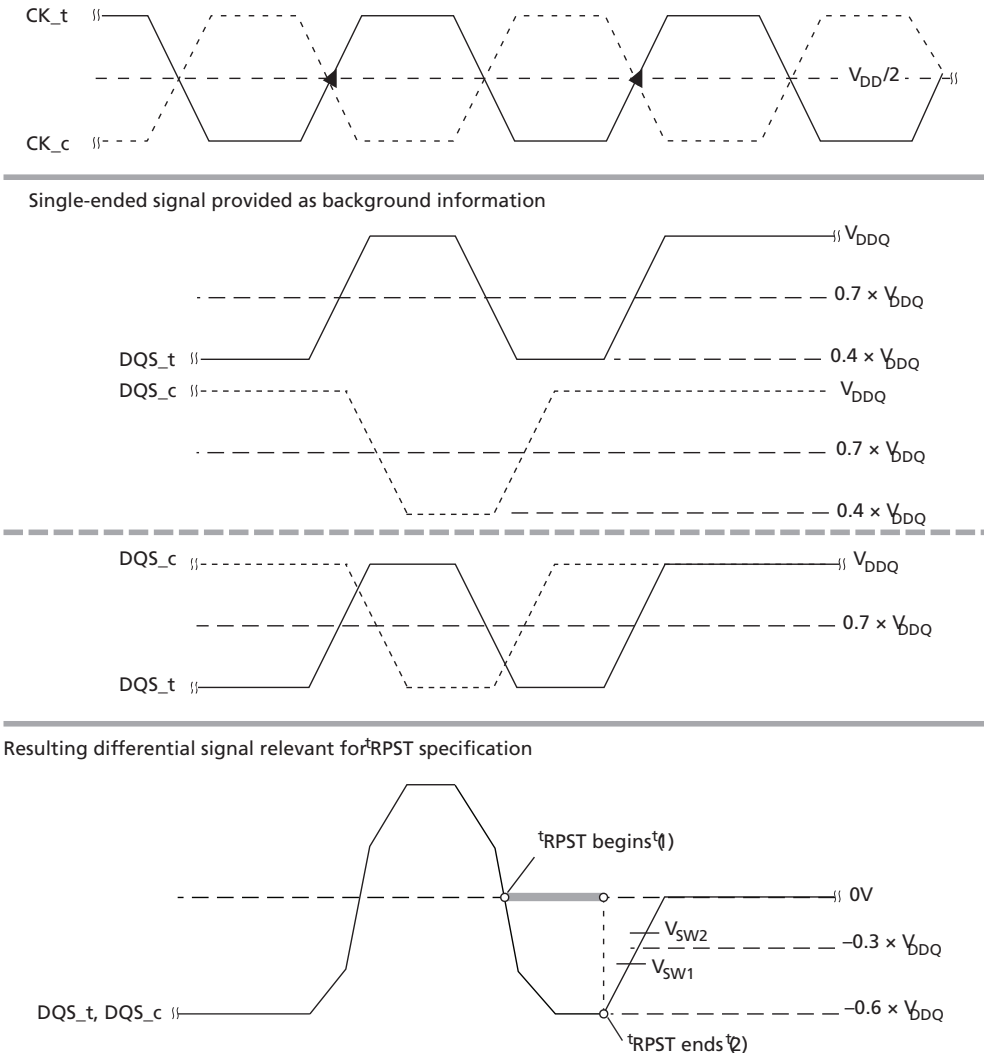

Notes: 1. V_{SW1} = (–0.3 - 0.04) × V_{DDQ}.
2. V_{SW2} = (–0.30 + 0.04) × V_{DDQ}.
3. DQS_t and DQS_c low level = V_{DDQ}/(50 + 34) × 34 = 0.4 × V_{DDQ}
Driver impedance = RZQ/7 = 34Ω
V_{TT} test load = 50Ω to V_{DDQ}.

Micron Technology, Inc. reserves the right to change products or specifications without notice.
© 2018 Micron Technology, Inc. All rights reserved.

READ Burst Operation

DDR4 READ commands support bursts of BL8 (fixed), BC4 (fixed), and BL8/BC4 on-the-fly (OTF); OTF uses address A12 to control OTF when OTF is enabled:

- A12 = 0, BC4 (BC4 = burst chop)
- A12 = 1, BL8

READ commands can issue precharge automatically with a READ with auto precharge command (RDA), and is enabled by A10 HIGH:

- READ command with A10 = 0 (RD) performs standard read, bank remains active after READ burst.
- READ command with A10 = 1 (RDA) performs read with auto precharge, bank goes in to precharge after READ burst.

Figure 130: READ Burst Operation, RL = 11 (AL = 0, CL = 11, BL8)

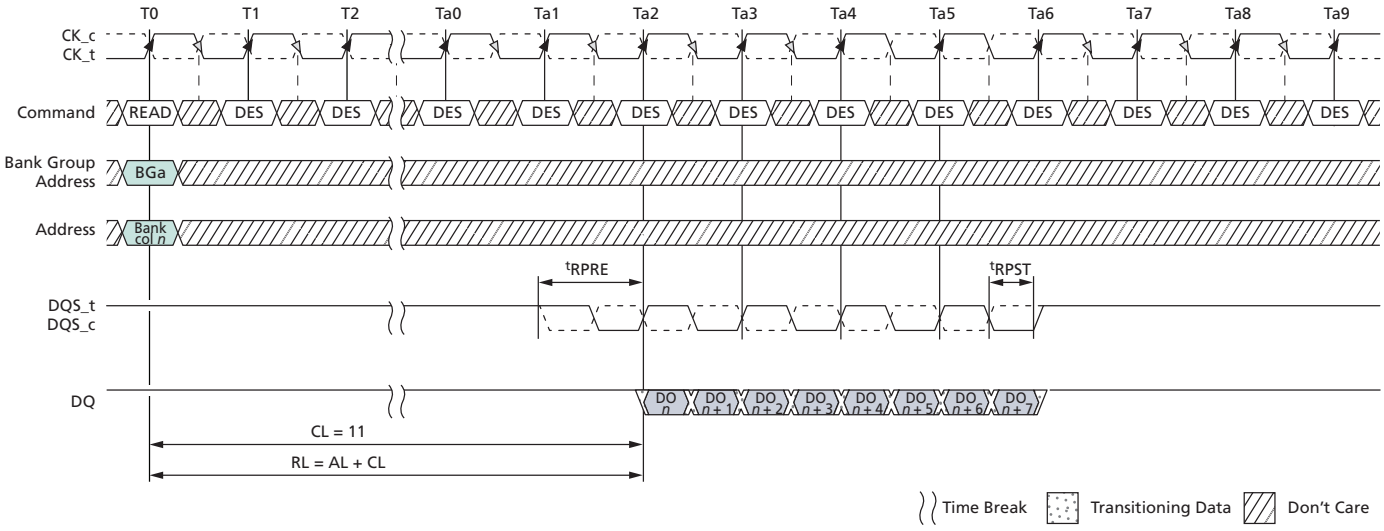

Notes: 1. BL8, RL = 0, AL = 0, CL = 11, Preamble = 1^{t}CK.
2. DO *n* = data-out from column *n*.
3. DES commands are shown for ease of illustration; other commands may be valid at these times.
4. BL8 setting activated by either MR0[1:0] = 00 or MR0[1:0] = 01 and A12 = 1 during READ command at T0.
5. CA parity = Disable, CS to CA latency = Disable, Read DBI = Disable.

Micron Technology, Inc. reserves the right to change products or specifications without notice.
© 2018 Micron Technology, Inc. All rights reserved.

Figure 131: READ Burst Operation, RL = 21 (AL = 10, CL = 11, BL8)

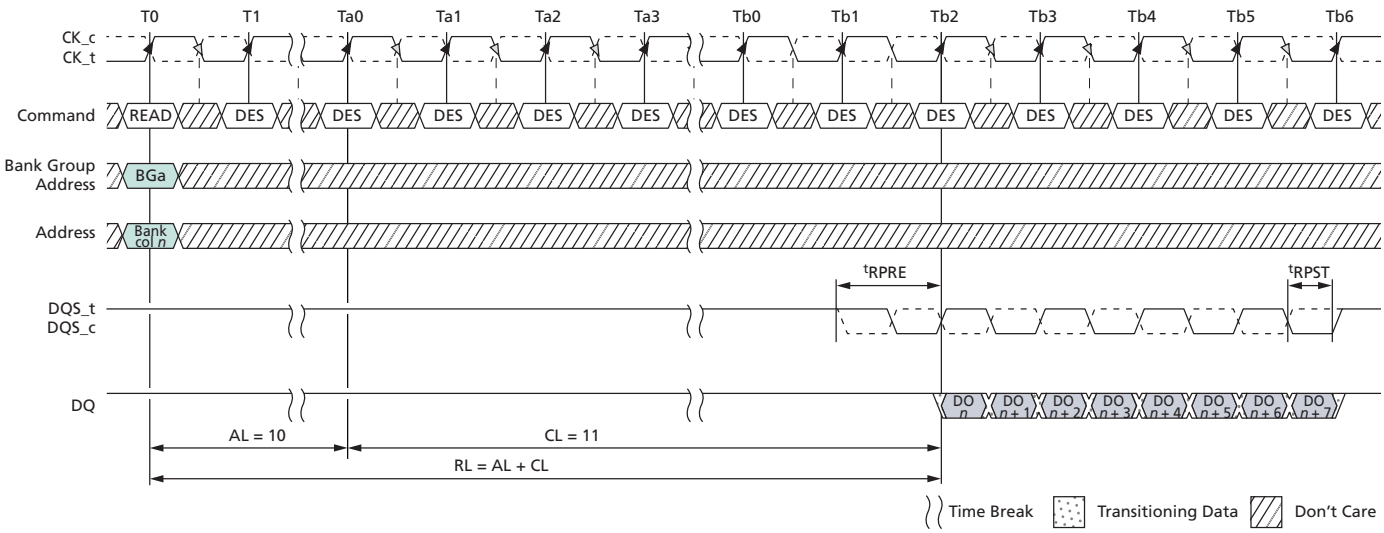

Notes: 1. BL8, RL = 21, AL = (CL - 1), CL = 11, Preamble = 1^{t}CK.
2. DO *n* = data-out from column *n*.
3. DES commands are shown for ease of illustration; other commands may be valid at these times.
4. BL8 setting activated by either MR0[1:0] = 00 or MR0[1:0] = 01 and A12 = 1 during READ command at T0.
5. CA parity = Disable, CS to CA latency = Disable, Read DBI = Disable.

Micron Technology, Inc. reserves the right to change products or specifications without notice.
© 2018 Micron Technology, Inc. All rights reserved.

READ Operation Followed by Another READ Operation

Figure 132: Consecutive READ (BL8) with 1tCK Preamble in Different Bank Group

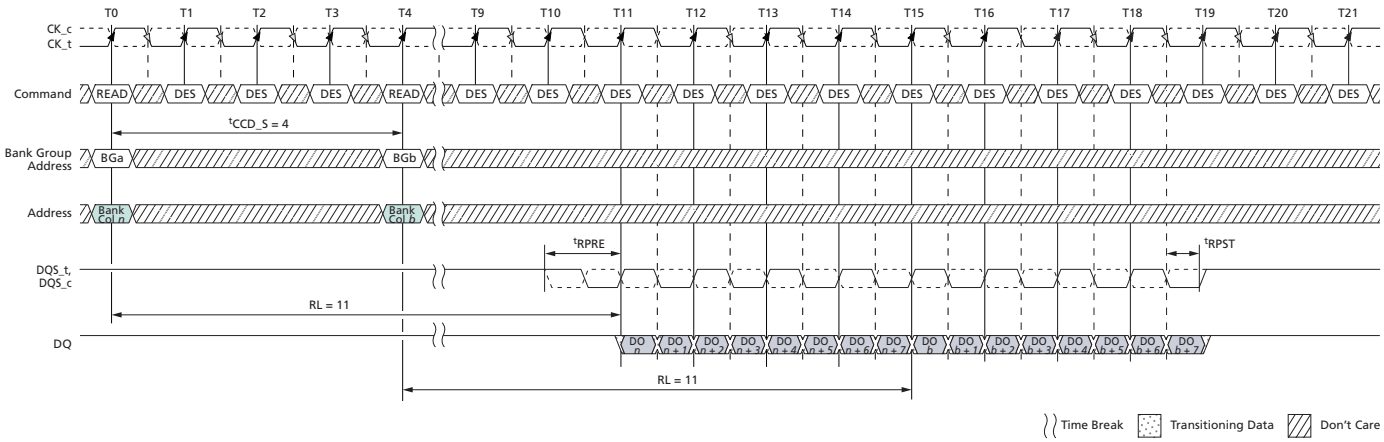

Notes: 1. BL8, AL = 0, CL = 11, Preamble = 1tCK.
2. DO *n* (or *b*) = data-out from column *n* (or column *b*).
3. DES commands are shown for ease of illustration; other commands may be valid at these times.
4. BL8 setting activated by either MR0[1:0] = 00 or MR0[1:0] = 01 and A12 = 1 during READ commands at T0 and T4.
5. CA parity = Disable, CS to CA latency = Disable, Read DBI = Disable.

Figure 133: Consecutive READ (BL8) with 2tCK Preamble in Different Bank Group

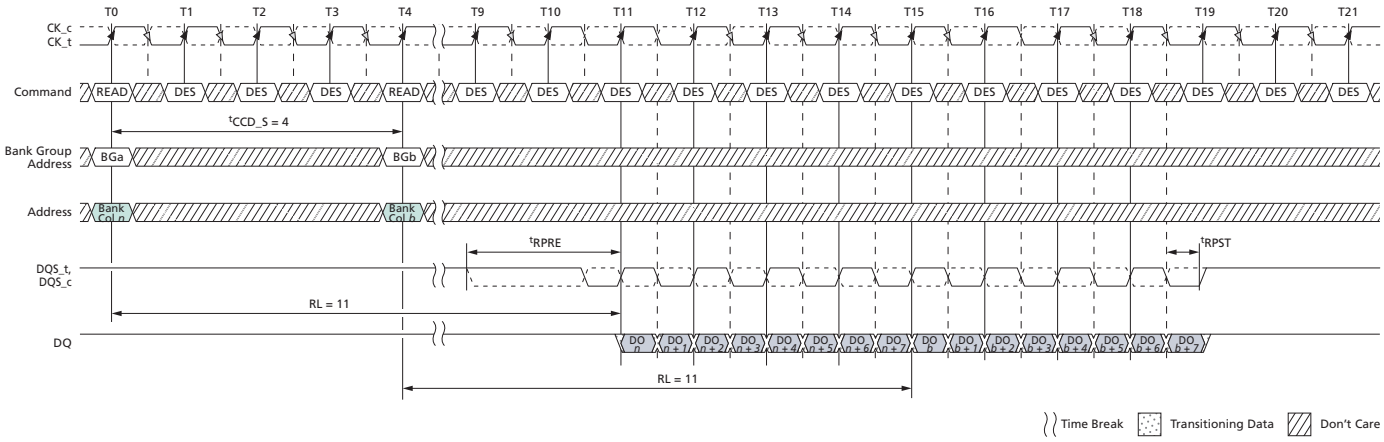

Notes: 1. BL8, AL = 0, CL = 11, Preamble = 2tCK.
2. DO *n* (or *b*) = data-out from column *n* (or column *b*).
3. DES commands are shown for ease of illustration; other commands may be valid at these times.
4. BL8 setting activated by either MR0[1:0] = 00 or MR0[1:0] = 01 and A12 = 1 during READ commands at T0 and T4.
5. CA parity = Disable, CS to CA latency = Disable, Read DBI = Disable.

Micron Technology, Inc. reserves the right to change products or specifications without notice.
© 2018 Micron Technology, Inc. All rights reserved.

Figure 134: Nonconsecutive READ (BL8) with 1tCK Preamble in Same or Different Bank Group

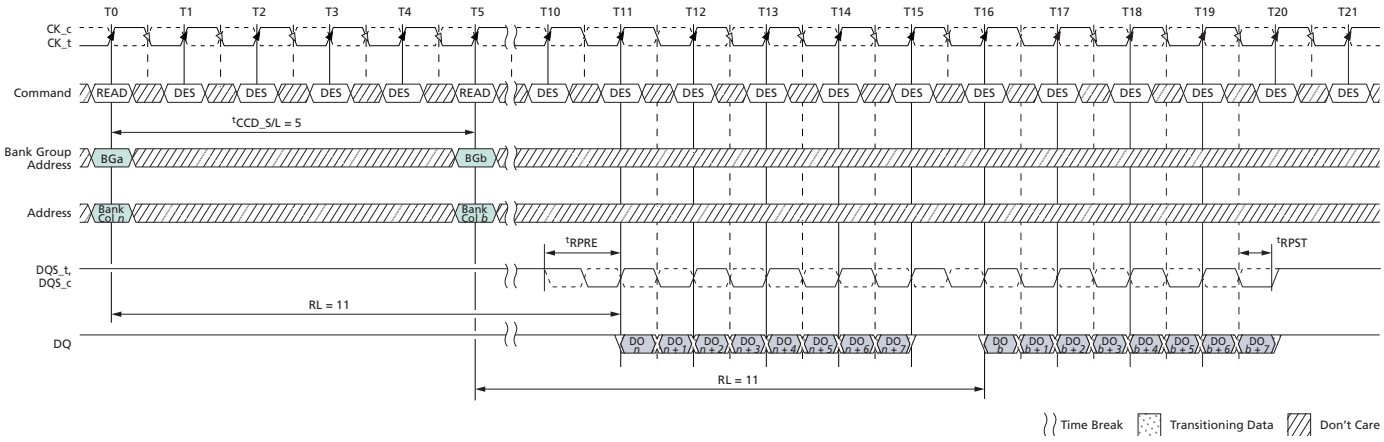

Notes: 1. BL8, AL = 0, CL = 11, Preamble = 1tCK, tCCD_S/L = 5.
2. DO *n* (or *b*) = data-out from column *n* (or column *b*).
3. DES commands are shown for ease of illustration; other commands may be valid at these times.
4. BL8 setting activated by either MR0[1:0] = 00 or MR0[1:0] = 01 and A12 = 1 during READ commands at T0 and T5.
5. CA parity = Disable, CS to CA latency = Disable, Read DBI = Disable.

Figure 135: Nonconsecutive READ (BL8) with 2tCK Preamble in Same or Different Bank Group

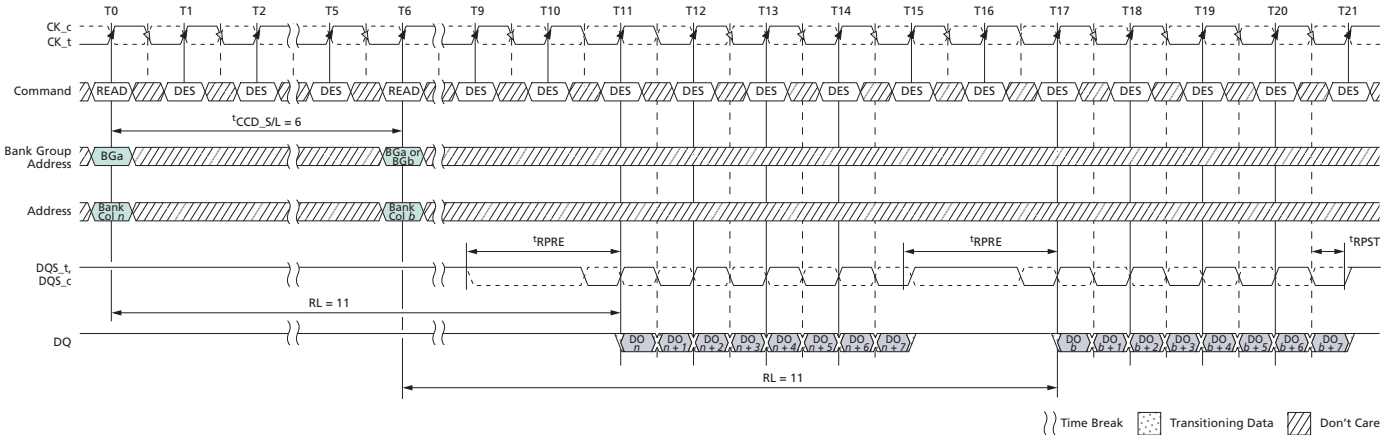

Notes: 1. BL8, AL = 0, CL = 11, Preamble = 2tCK, tCCD_S/L = 6.
2. DO *n* (or *b*) = data-out from column *n* (or column *b*).
3. DES commands are shown for ease of illustration; other commands may be valid at these times.
4. BL8 setting activated by either MR0[A1:0 = 00] or MR0[A1:0 = 01] and A12 = 1 during READ commands at T0 and T6.
5. CA parity = Disable, CS to CA latency = Disable, Read DBI = Disable.
6. 6 tCCD_S/L = 5 isn't allowed in 2tCK preamble mode.

Micron Technology, Inc. reserves the right to change products or specifications without notice.
© 2018 Micron Technology, Inc. All rights reserved.

Figure 136: READ (BC4) to READ (BC4) with 1tCK Preamble in Different Bank Group

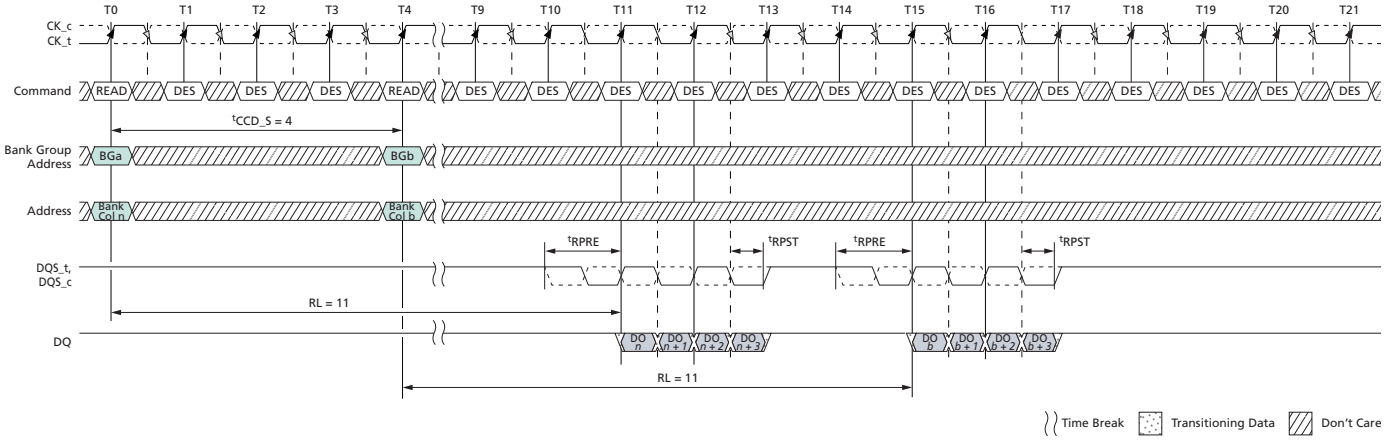

Notes: 1. BL8, AL = 0, CL = 11, Preamble = 1tCK.
2. DO *n* (or *b*) = data-out from column *n* (or column *b*).
3. DES commands are shown for ease of illustration; other commands may be valid at these times.
4. BC4 setting activated by either MR0[1:0] = 10 or MR0[1:0] = 01 and A12 = 0 during READ commands at T0 and T4.
5. CA parity = Disable, CS to CA latency = Disable, Read DBI = Disable.

Figure 137: READ (BC4) to READ (BC4) with 2tCK Preamble in Different Bank Group

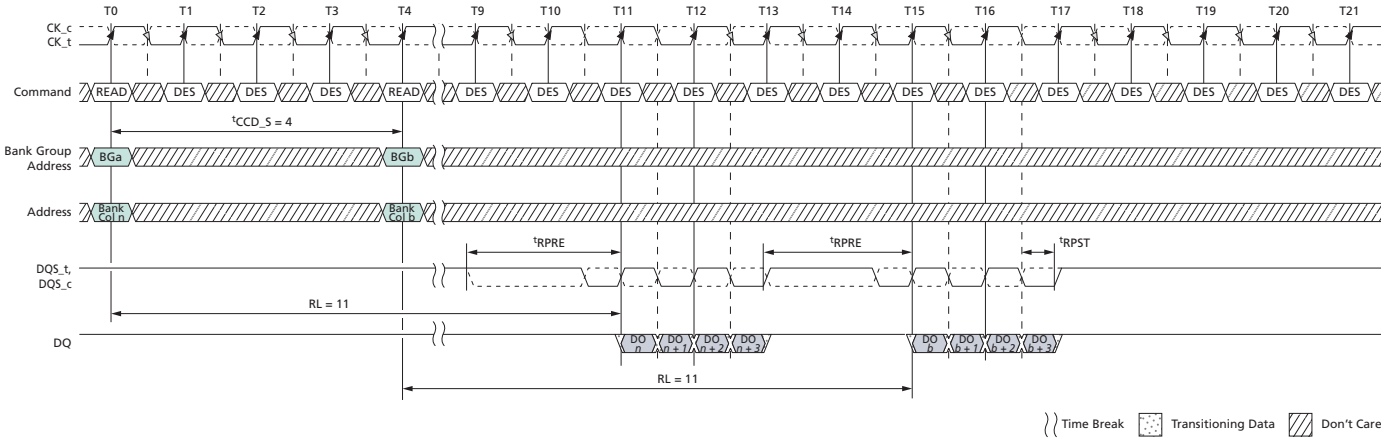

Notes: 1. BL8, AL = 0, CL = 11, Preamble = 2tCK.
2. DO *n* (or *b*) = data-out from column *n* (or column *b*).
3. DES commands are shown for ease of illustration; other commands may be valid at these times.
4. BC4 setting activated by either MR0[1:0] = 10 or MR0[1:0] = 01 and A12 = 0 during READ commands at T0 and T4.
5. CA parity = Disable, CS to CA latency = Disable, Read DBI = Disable.

Micron Technology, Inc. reserves the right to change products or specifications without notice.
© 2018 Micron Technology, Inc. All rights reserved.

Figure 138: READ (BL8) to READ (BC4) OTF with 1tCK Preamble in Different Bank Group

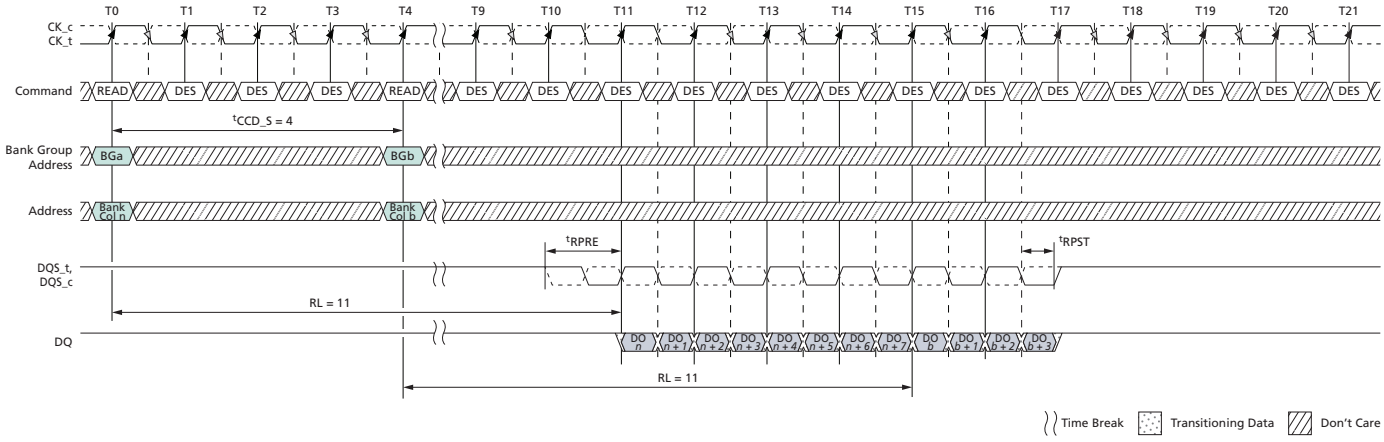

Notes: 1. BL = 8, AL = 0, CL = 11, Preamble = 1tCK.
2. DO *n* (or *b*) = data-out from column *n* (or column *b*).
3. DES commands are shown for ease of illustration; other commands may be valid at these times.
4. BL8 setting activated by MR0[1:0] = 01 and A12 = 1 during READ commands at T0. BC4 setting activated by MR0[1:0] = 01 and A12 = 0 during READ commands at T4.
5. CA parity = Disable, CS to CA latency = Disable, Read DBI = Disable.

Figure 139: READ (BL8) to READ (BC4) OTF with 2tCK Preamble in Different Bank Group

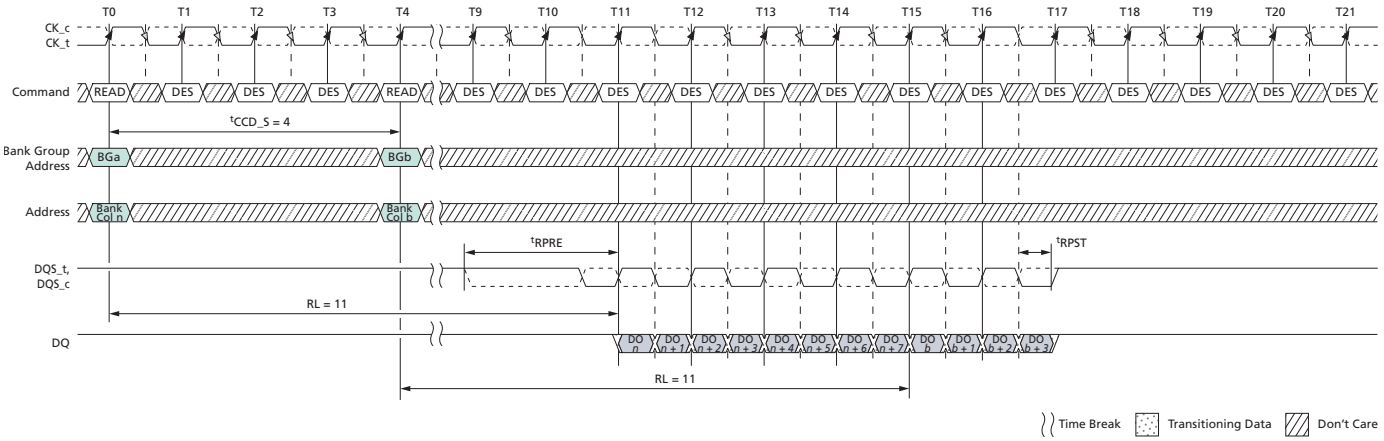

Notes: 1. BL = 8, AL =0, CL = 11, Preamble = 2tCK.
2. DO *n* (or *b*) = data-out from column *n* (or column *b*).
3. DES commands are shown for ease of illustration; other commands may be valid at these times.
4. BL8 setting activated by MR0[1:0] = 01 and A12 = 1 during READ commands at T0. BC4 setting activated by MR0[1:0] = 01 and A12 = 0 during READ commands at T4.
5. CA parity = Disable, CS to CA latency = Disable, Read DBI = Disable.

Micron Technology, Inc. reserves the right to change products or specifications without notice.
© 2018 Micron Technology, Inc. All rights reserved.

Figure 140: READ (BC4) to READ (BL8) OTF with 1tCK Preamble in Different Bank Group

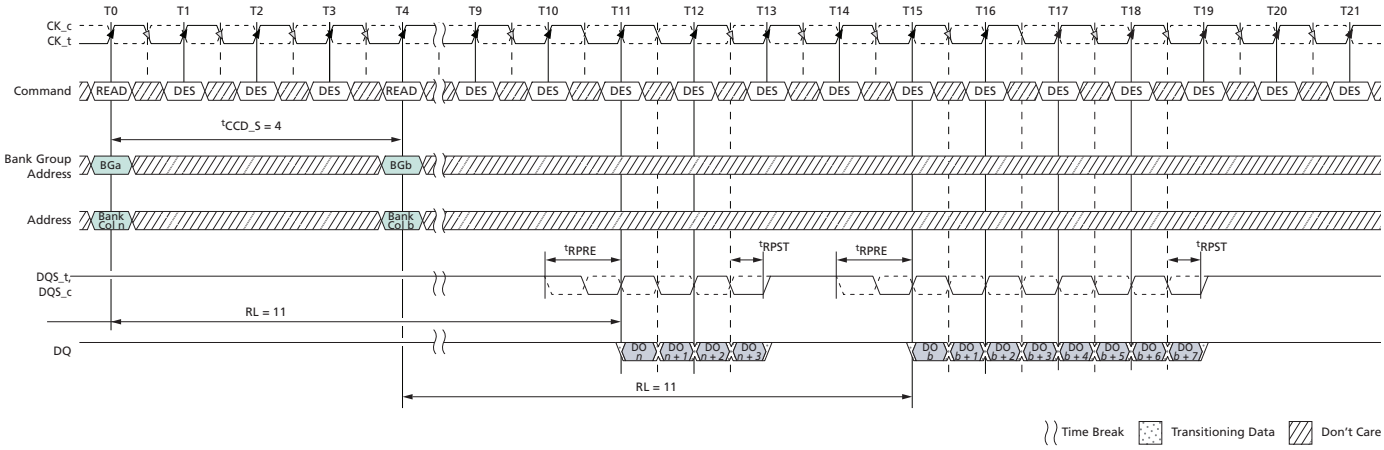

Notes: 1. BL = 8, AL =0, CL = 11, Preamble = 1tCK.
2. DO *n* (or *b*) = data-out from column *n* (or column *b*).
3. DES commands are shown for ease of illustration; other commands may be valid at these times.
4. BC4 setting activated by MR0[1:0] = 01 and A12 = 0 during READ commands at T0. BL8 setting activated by MR0[1:0] = 01 and A12 = 1 during READ commands at T4.
5. CA parity = Disable, CS to CA latency = Disable, Read DBI = Disable.

Figure 141: READ (BC4) to READ (BL8) OTF with 2tCK Preamble in Different Bank Group

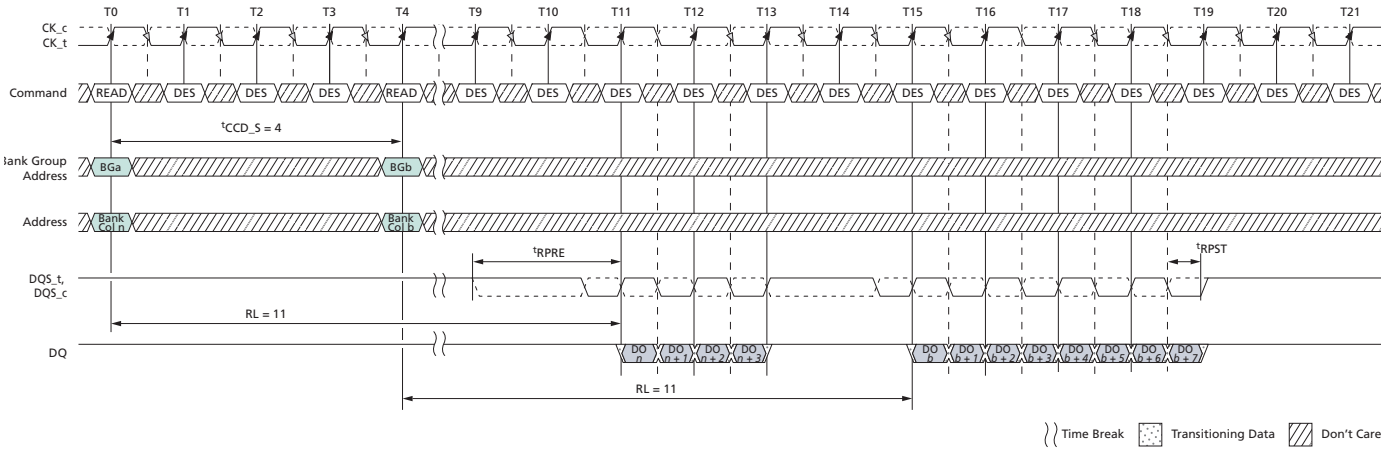

Notes: 1. BL = 8, AL = 0, CL = 11, Preamble = 2tCK.
2. DO *n* (or *b*) = data-out from column *n* (or column *b*).
3. DES commands are shown for ease of illustration; other commands may be valid at these times.
4. BC4 setting activated by MR0[1:0] = 01 and A12 = 0 during READ commands at T0. BL8 setting activated by MR0[1:0] = 01 and A12 = 1 during READ commands at T4.
5. CA parity = Disable, CS to CA latency = Disable, Read DBI = Disable.

Micron Technology, Inc. reserves the right to change products or specifications without notice.
© 2018 Micron Technology, Inc. All rights reserved.

READ Operation Followed by WRITE Operation

Figure 142: READ (BL8) to WRITE (BL8) with 1tCK Preamble in Same or Different Bank Group

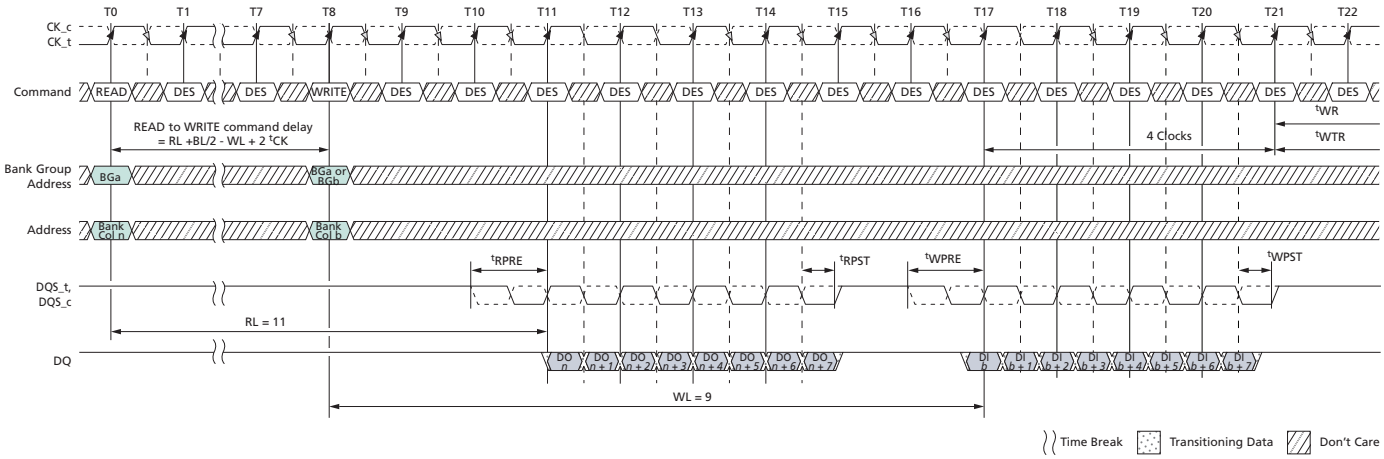

Notes: 1. BL = 8, RL = 11 (CL = 11, AL = 0), READ preamble = 1tCK, WL = 9 (CWL = 9, AL = 0), WRITE preamble = 1tCK.
2. DO *n* = data-out from column *n*; DI *b* = data-in from column *b*.
3. DES commands are shown for ease of illustration; other commands may be valid at these times.
4. BL8 setting activated by either MR0[1:0] = 00 or MR0[1:0] = 01 and A12 = 1 during READ commands at T0 and WRITE commands at T8.
5. CA parity = Disable, CS to CA latency = Disable, Read DBI = Disable, Write DBI = Disable, Write CRC = Disable.

Figure 143: READ (BL8) to WRITE (BL8) with 2tCK Preamble in Same or Different Bank Group

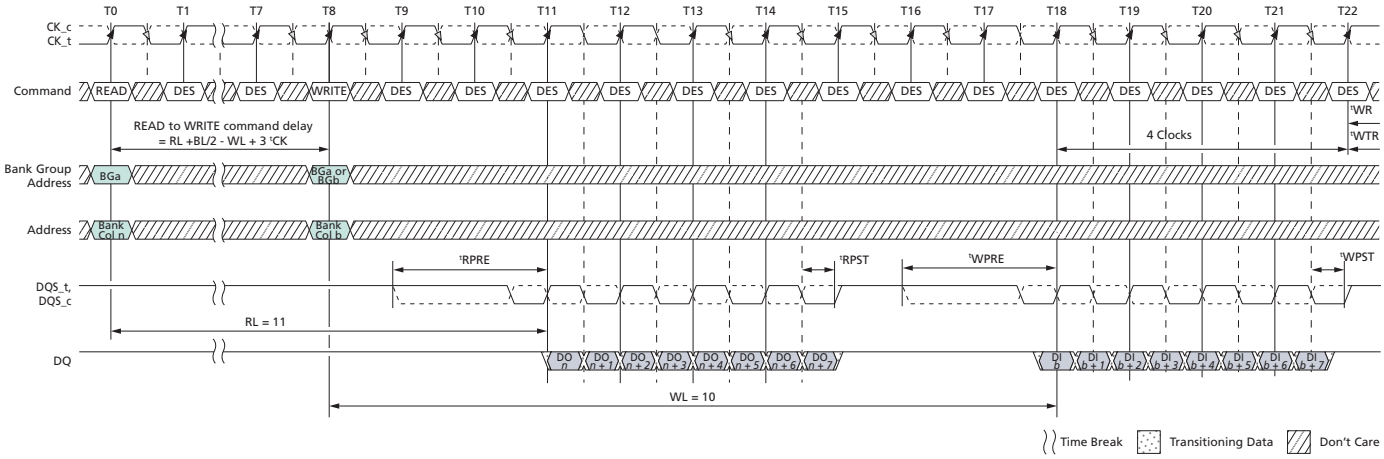

Notes: 1. BL = 8, RL = 11 (CL = 11, AL = 0), READ preamble = 2tCK, WL = 10 (CWL = 9+1 [see Note 5], AL = 0), WRITE preamble = 2tCK.
2. DO *n* = data-out from column *n*; DI *b* = data-in from column *b*.
3. DES commands are shown for ease of illustration; other commands may be valid at these times.
4. BL8 setting activated by either MR0[1:0] = 00 or MR0[1:0] = 01 and A12 = 1 during READ commands at T0 and WRITE commands at T8.
5. When operating in 2tCK WRITE preamble mode, CWL may need to be programmed to a value at least 1 clock greater than the lowest CWL setting.
6. CA parity = Disable, CS to CA latency = Disable, Read DBI = Disable, Write DBI = Disable, Write CRC = Disable.

Micron Technology, Inc. reserves the right to change products or specifications without notice.
© 2018 Micron Technology, Inc. All rights reserved.

Figure 144: READ (BC4) OTF to WRITE (BC4) OTF with 1tCK Preamble in Same or Different Bank Group

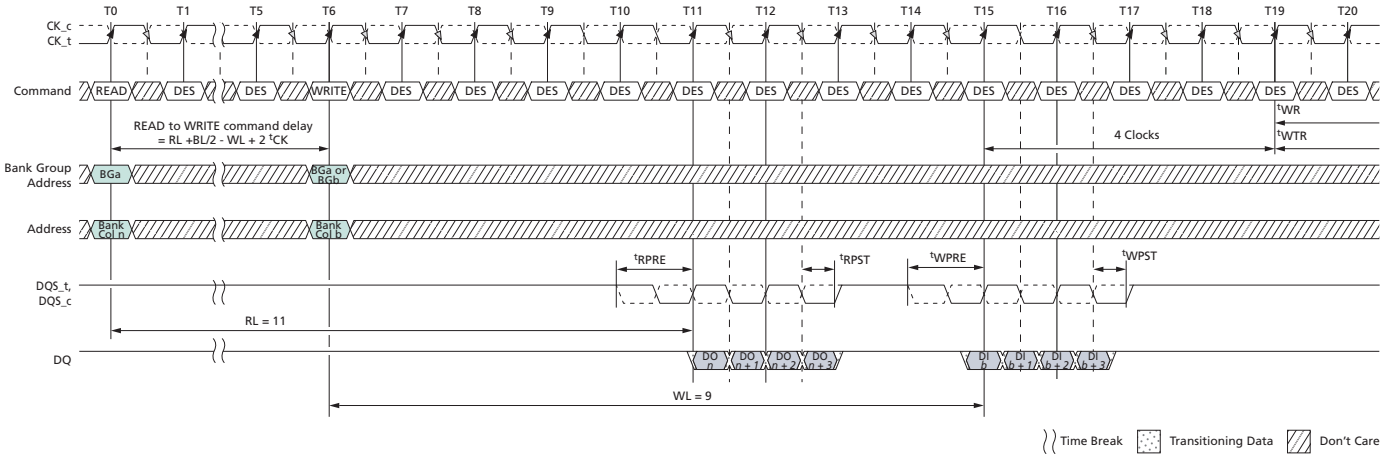

Notes: 1. BC = 4, RL = 11 (CL = 11, AL = 0), READ preamble = 1tCK, WL = 9 (CWL = 9, AL = 0), WRITE preamble = 1tCK.
2. DO *n* = data-out from column *n*; DI *b* = data-in from column *b*.
3. DES commands are shown for ease of illustration; other commands may be valid at these times.
4. BC4 (OTF) setting activated by MR0[1:0] = 01 and A12 = 0 during READ commands at T0 and WRITE commands at T6.
5. CA parity = Disable, CS to CA latency = Disable, Read DBI = Disable, Write DBI = Disable, Write CRC = Disable.

Figure 145: READ (BC4) OTF to WRITE (BC4) OTF with 2tCK Preamble in Same or Different Bank Group

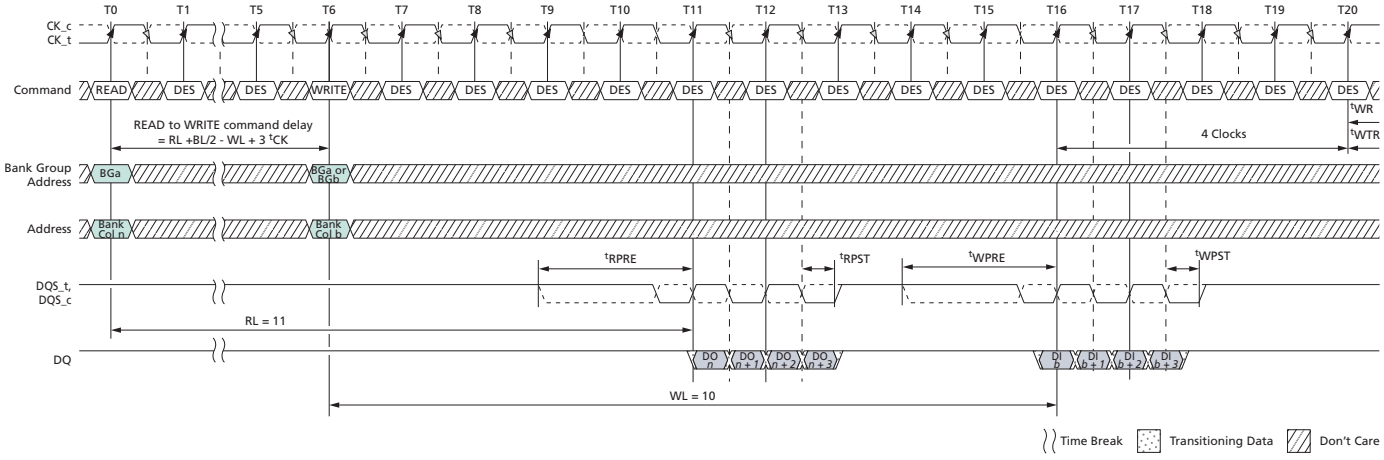

Notes: 1. BC = 4, RL = 11 (CL = 11, AL = 0), READ preamble = 2tCK, WL = 10 (CWL = 9 + 1 [see Note 5], AL = 0), WRITE preamble = 2tCK.
2. DO *n* = data-out from column *n*; DI *b* = data-in from column *b*.
3. DES commands are shown for ease of illustration; other commands may be valid at these times.
4. BC4 (OTF) setting activated by MR0[1:0] = 01 and A12 = 0 during READ commands at T0 and WRITE commands at T6.
5. When operating in 2tCK WRITE preamble mode, CWL may need to be programmed to a value at least 1 clock greater than the lowest CWL setting.
6. CA parity = Disable, CS to CA latency = Disable, Read DBI = Disable, Write DBI = Disable, Write CRC = Disable.

Micron Technology, Inc. reserves the right to change products or specifications without notice.
© 2018 Micron Technology, Inc. All rights reserved.

Figure 146: READ (BC4) Fixed to WRITE (BC4) Fixed with 1tCK Preamble in Same or Different Bank Group

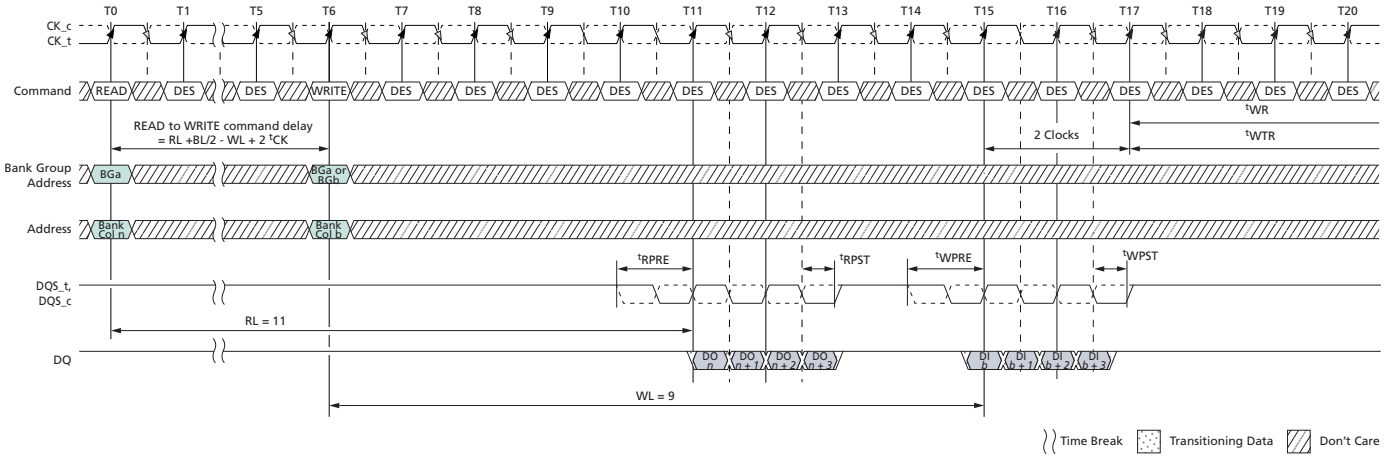

Notes: 1. BC = 4, RL = 11 (CL = 11, AL = 0), READ preamble = 1tCK, WL = 9 (CWL = 9, AL = 0), WRITE preamble = 1tCK.
2. DO *n* = data-out from column *n*; DI *b* = data-in from column *b*.
3. DES commands are shown for ease of illustration; other commands may be valid at these times.
4. BC4 (fixed) setting activated by MR0[1:0] = 01.
5. CA parity = Disable, CS to CA latency = Disable, Read DBI = Disable, Write DBI = Disable, Write CRC = Disable.

Figure 147: READ (BC4) Fixed to WRITE (BC4) Fixed with 2tCK Preamble in Same or Different Bank Group

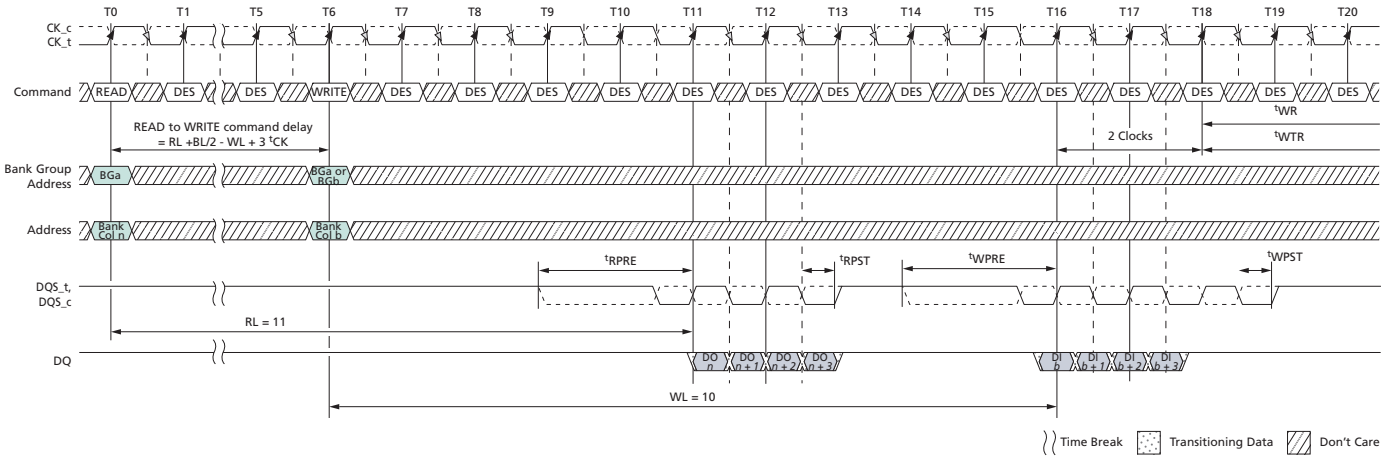

Notes: 1. BC = 4, RL = 11 (CL = 11, AL = 0), READ preamble = 2tCK, WL = 9 (CWL = 9 + 1 [see Note 5], AL = 0), WRITE preamble = 2tCK.
2. DO *n* = data-out from column *n*; DI *b* = data-in from column *b*.
3. DES commands are shown for ease of illustration; other commands may be valid at these times.
4. BC4 (fixed) setting activated by MR0[1:0] = 10.
5. When operating in 2tCK WRITE preamble mode, CWL may need to be programmed to a value at least 1 clock greater than the lowest CWL setting.
6. CA parity = Disable, CS to CA latency = Disable, Read DBI = Disable, Write DBI = Disable, Write CRC = Disable.

Micron Technology, Inc. reserves the right to change products or specifications without notice.
© 2018 Micron Technology, Inc. All rights reserved.

Figure 148: READ (BC4) to WRITE (BL8) OTF with 1tCK Preamble in Same or Different Bank Group

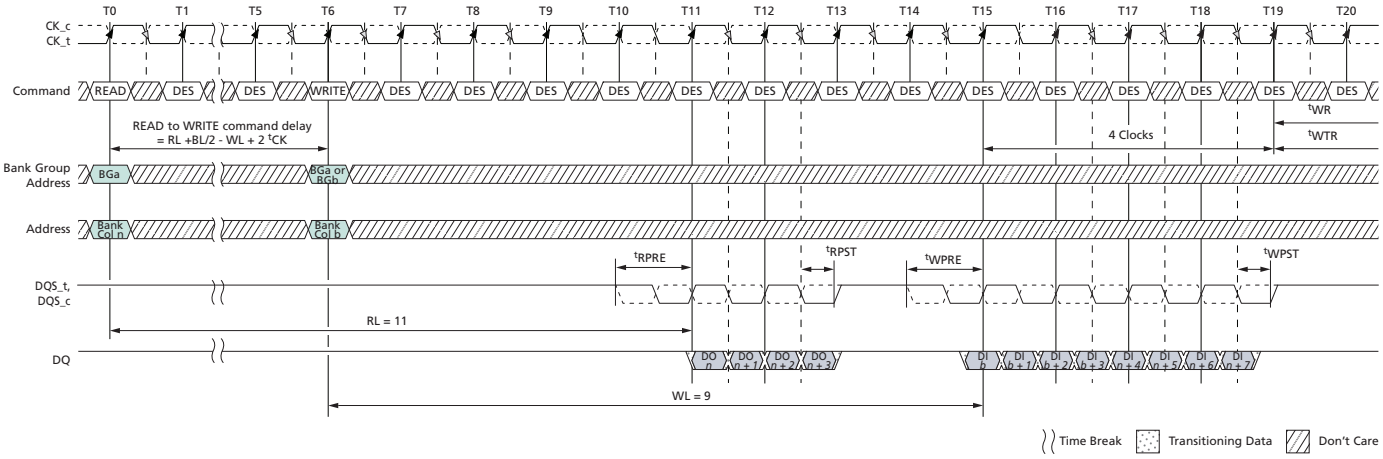

Notes: 1. BL = 8, RL = 11 (CL = 11, AL = 0), READ preamble = 1tCK, WL = 9 (CWL = 9, AL = 0), WRITE preamble = 1tCK.
2. DO *n* = data-out from column *n*; DI *b* = data-in from column *b*.
3. DES commands are shown for ease of illustration; other commands may be valid at these times.
4. BC4 setting activated by MR0[1:0] = 01 and A12 = 0 during WRITE commands at T0.
BL8 setting activated by MR0[1:0] = 01 and A12 = 1 during READ commands at T6.
5. CA parity = Disable, CS to CA latency = Disable, Read DBI = Disable, Write DBI = Disable, Write CRC = Disable.

Figure 149: READ (BC4) to WRITE (BL8) OTF with 2tCK Preamble in Same or Different Bank Group

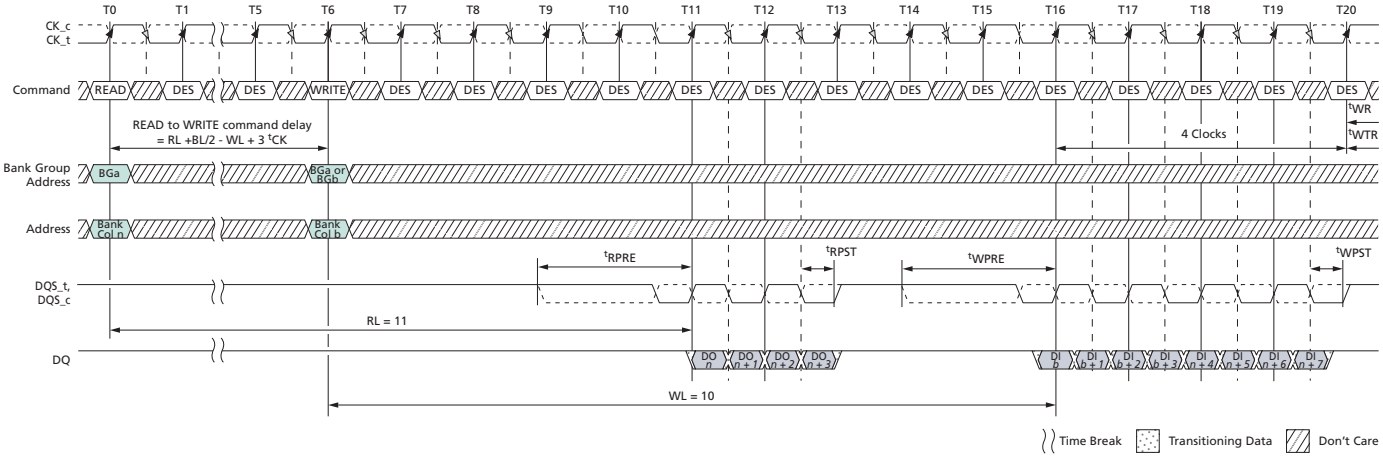

Notes: 1. BL = 8, RL = 11 (CL = 11, AL = 0), READ preamble = 2tCK, WL = 10 (CWL = 9 + 1 [see Note 5], AL = 0), WRITE preamble = 2tCK.
2. DO *n* = data-out from column *n*; DI *b* = data-in from column *b*.
3. DES commands are shown for ease of illustration; other commands may be valid at these times.
4. BC4 setting activated by MR0[1:0] = 01 and A12 = 0 during WRITE commands at T0.
BL8 setting activated by MR0[1:0] = 01 and A12 = 1 during READ commands at T6.
5. CA parity = Disable, CS to CA latency = Disable, Read DBI = Disable, Write DBI = Disable, Write CRC = Disable.

Micron Technology, Inc. reserves the right to change products or specifications without notice.
© 2018 Micron Technology, Inc. All rights reserved.

Figure 150: READ (BL8) to WRITE (BC4) OTF with 1tCK Preamble in Same or Different Bank Group

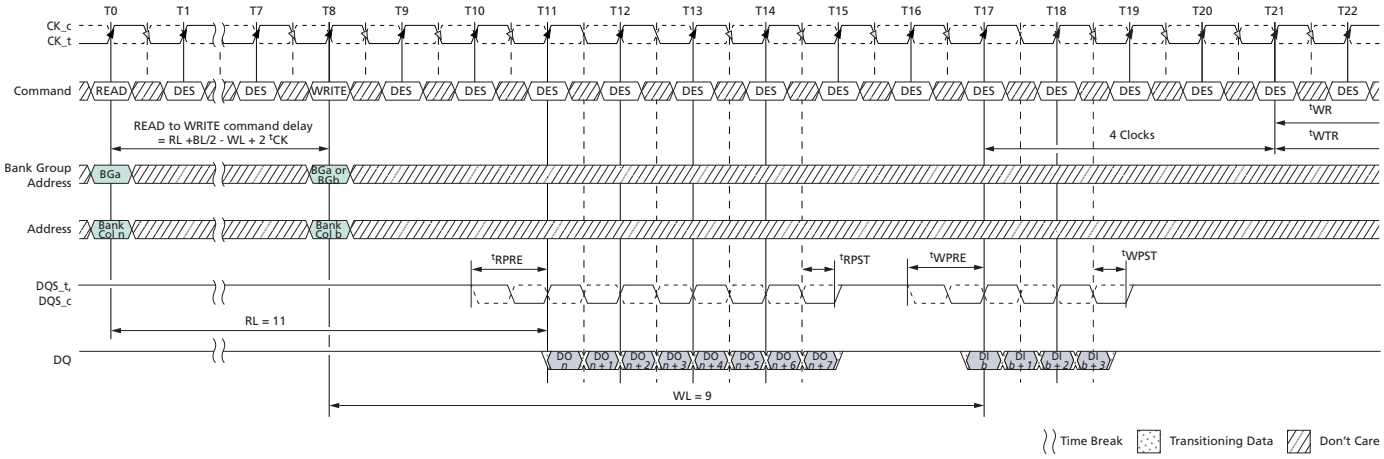

Notes: 1. BL = 8, RL = 11 (CL = 11, AL = 0), READ preamble = 1tCK, WL = 9 (CWL = 9, AL = 0), WRITE preamble = 1tCK.
2. DO *n* = data-out from column *n*; DI *b* = data-in from column *b*.
3. DES commands are shown for ease of illustration; other commands may be valid at these times.
4. BL8 setting activated by MR0[1:0] = 01 and A12 = 1 during READ commands at T0.
BC4 setting activated by MR0[1:0] = 01 and A12 = 0 during WRITE commands at T8.
5. CA parity = Disable, CS to CA latency = Disable, Read DBI = Disable, Write DBI = Disable, Write CRC = Disable.

Figure 151: READ (BL8) to WRITE (BC4) OTF with 2tCK Preamble in Same or Different Bank Group

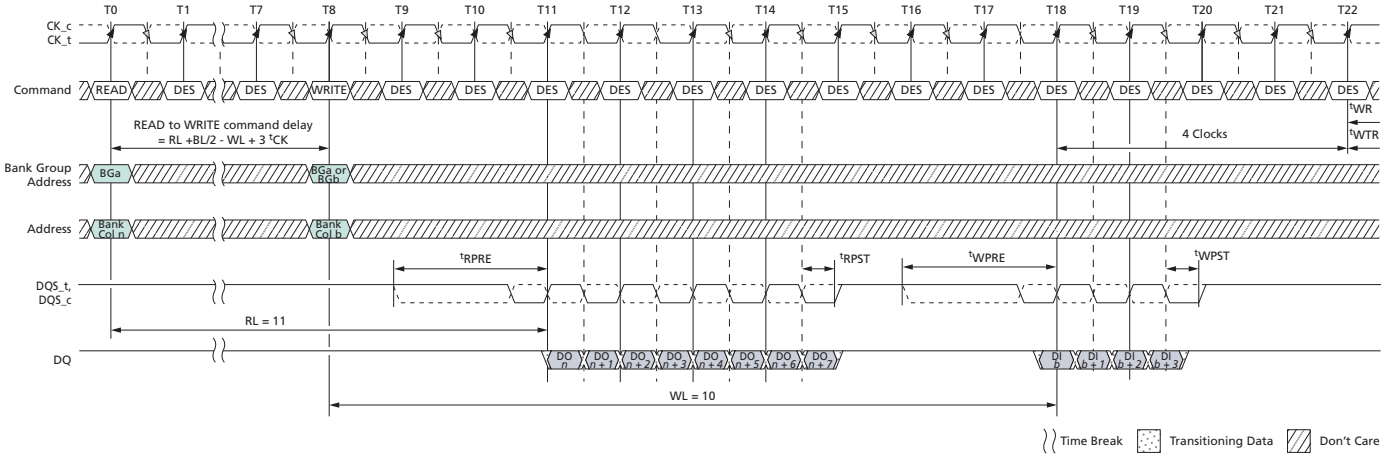

Notes: 1. BL = 8, RL = 11 (CL = 11, AL = 0), READ preamble = 2tCK, WL = 10 (CWL = 9 + 1 [see Note 5], AL = 0), WRITE preamble = 2tCK.
2. DO *n* = data-out from column *n*; DI *b* = data-in from column *b*.
3. DES commands are shown for ease of illustration; other commands may be valid at these times.
4. BL8 setting activated by MR0[1:0] = 01 and A12 = 1 during READ commands at T0.
BC4 setting activated by MR0[1:0] = 01 and A12 = 0 during WRITE commands at T8.
5. CA parity = Disable, CS to CA latency = Disable, Read DBI = Disable, Write DBI = Disable, Write CRC = Disable.

READ Operation Followed by PRECHARGE Operation

The minimum external READ command to PRECHARGE command spacing to the same bank is equal to AL + tRTP with tRTP being the internal READ command to PRECHARGE command delay. Note that the minimum ACT to PRE timing, tRAS, must be satisfied as well. The minimum value for the internal

Micron Technology, Inc. reserves the right to change products or specifications without notice.
© 2018 Micron Technology, Inc. All rights reserved.

READ command to PRECHARGE command delay is given by ^{t}RTP (MIN) = MAX (4 × *n*CK, 7.5ns). A new bank ACTIVATE command may be issued to the same bank if the following two conditions are satisfied simultaneously:

- The minimum RAS precharge time (^{t}RP [MIN]) has been satisfied from the clock at which the precharge begins.
- The minimum RAS cycle time (^{t}RC [MIN]) from the previous bank activation has been satisfied.

Figure 152: READ to PRECHARGE with 1^{t}CK Preamble

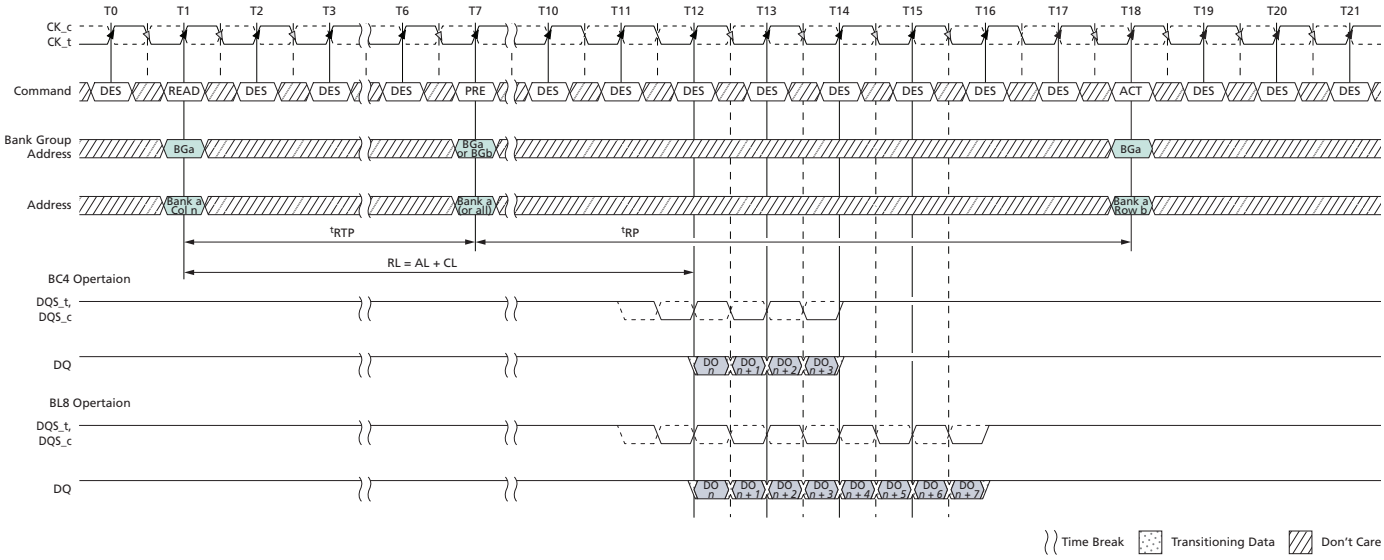

Notes: 1. RL = 11 (CL = 11, AL = 0), Preamble = 1^{t}CK, ^{t}RTP = 6, ^{t}RP = 11.
2. DO *n* = data-out from column *n*.
3. DES commands are shown for ease of illustration; other commands may be valid at these times.
4. The example assumes that ^{t}RAS (MIN) is satisfied at the PRECHARGE command time (T7) and that ^{t}RC (MIN) is satisfied at the next ACTIVATE command time (T18).
5. CA parity = Disable, CS to CA latency = Disable, Read DBI = Disable.

Micron Technology, Inc. reserves the right to change products or specifications without notice.
© 2018 Micron Technology, Inc. All rights reserved.

Figure 153: READ to PRECHARGE with 2tCK Preamble

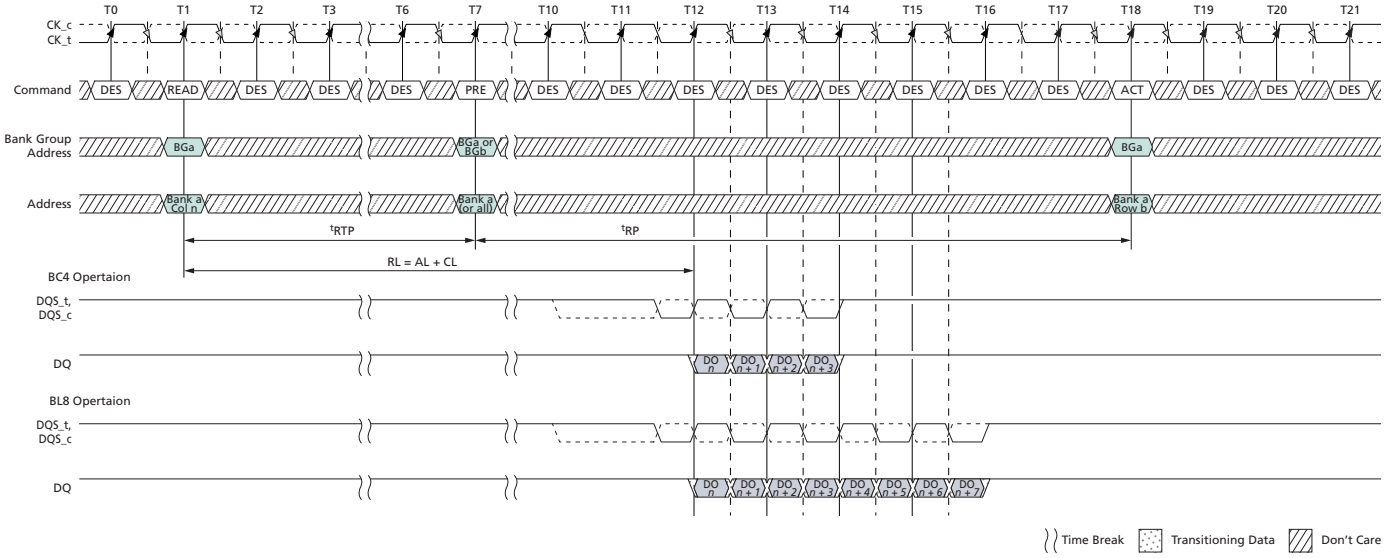

Notes: 1. RL = 11 (CL = 11, AL = 0), Preamble = 2tCK, tRTP = 6, tRP = 11.
2. DO *n* = data-out from column *n*.
3. DES commands are shown for ease of illustration; other commands may be valid at these times.
4. The example assumes that tRAS (MIN) is satisfied at the PRECHARGE command time (T7) and that tRC (MIN) is satisfied at the next ACTIVATE command time (T18).
5. CA parity = Disable, CS to CA latency = Disable, Read DBI = Disable.

Figure 154: READ to PRECHARGE with Additive Latency and 1tCK Preamble

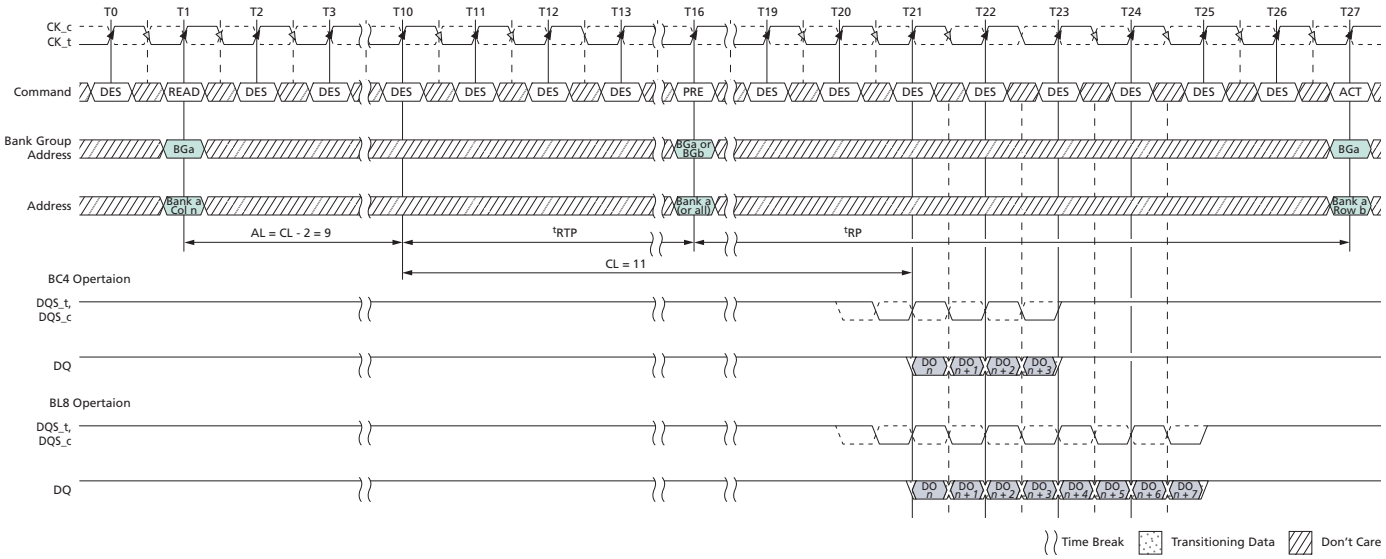

Notes: 1. RL =20 (CL = 11, AL = CL - 2), Preamble = 1tCK, tRTP = 6, tRP = 11.
2. DO *n* = data-out from column *n*.
3. DES commands are shown for ease of illustration; other commands may be valid at these times.
4. The example assumes that tRAS (MIN) is satisfied at the PRECHARGE command time (T16) and that tRC (MIN) is satisfied at the next ACTIVATE command time (T27).
5. CA parity = Disable, CS to CA latency = Disable, Read DBI = Disable.

Micron Technology, Inc. reserves the right to change products or specifications without notice.
© 2018 Micron Technology, Inc. All rights reserved.

Figure 155: READ with Auto Precharge and 1tCK Preamble

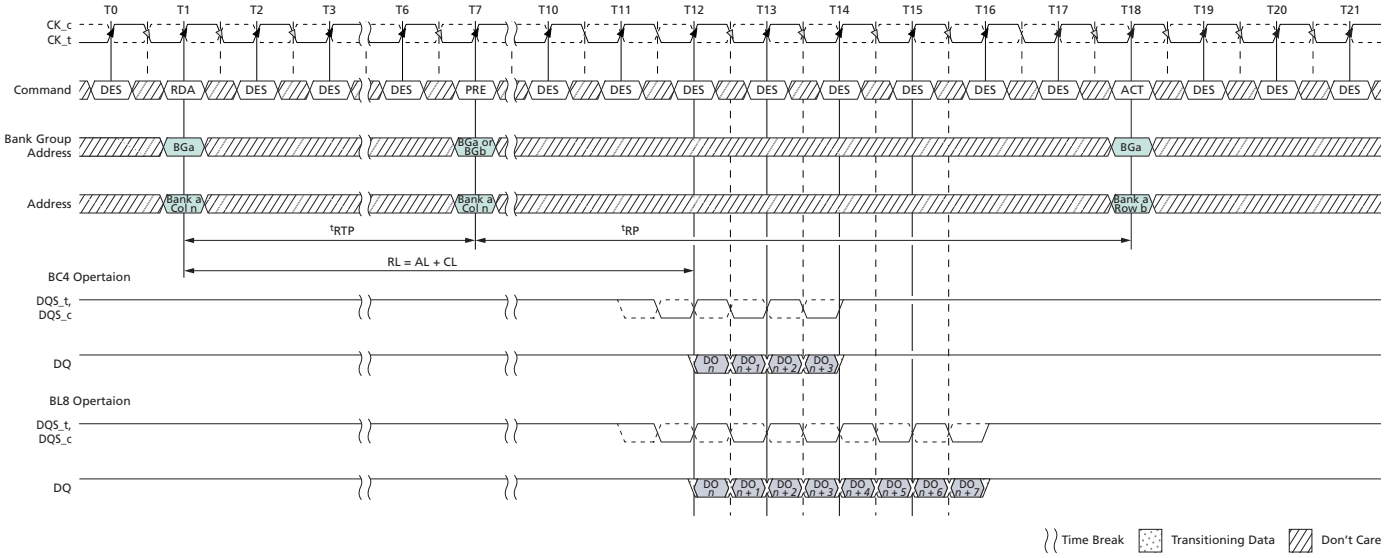

Notes: 1. RL = 11 (CL = 11, AL = 0), Preamble = 1tCK, tRTP = 6, tRP = 11.
2. DO *n* = data-out from column *n*.
3. DES commands are shown for ease of illustration; other commands may be valid at these times.
4. tRTP = 6 setting activated by MR0[A11:9 = 001].
5. The example assumes that tRC (MIN) is satisfied at the next ACTIVATE command time (T18).
6. CA parity = Disable, CS to CA latency = Disable, Read DBI = Disable.

Figure 156: READ with Auto Precharge, Additive Latency, and 1tCK Preamble

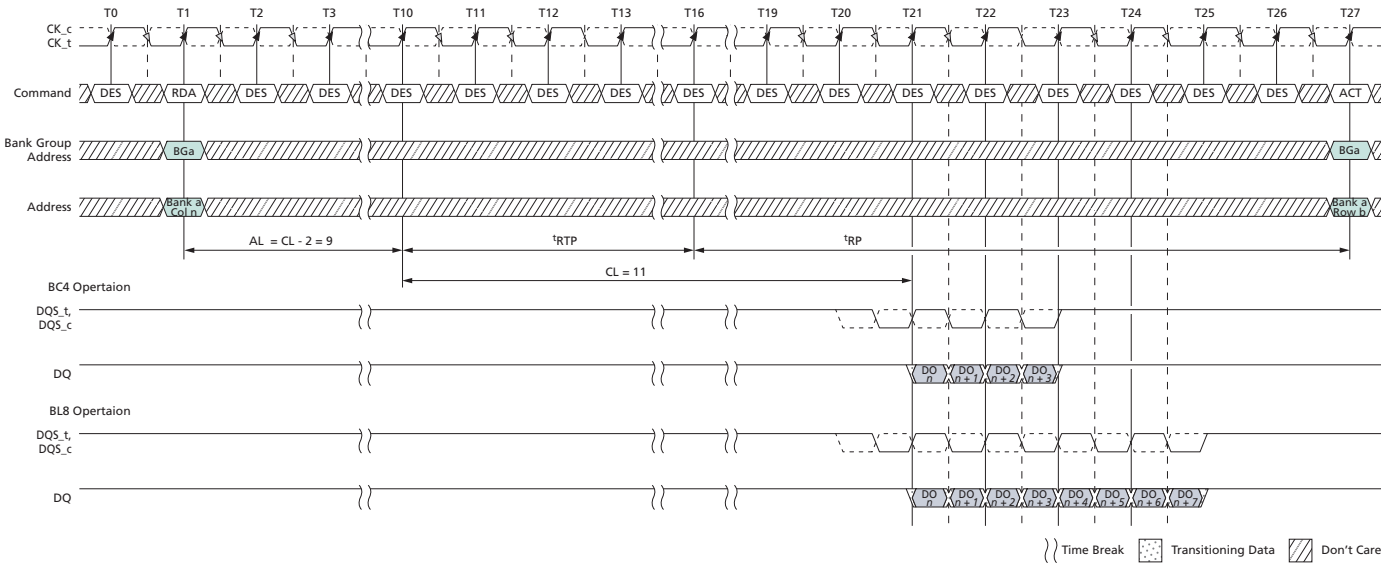

Notes: 1. RL = 20 (CL = 11, AL = CL - 2), Preamble = 1tCK, tRTP = 6, tRP = 11.
2. DO *n* = data-out from column *n*.
3. DES commands are shown for ease of illustration; other commands may be valid at these times.
4. tRTP = 6 setting activated by MR0[11:9] = 001.
5. The example assumes that tRC (MIN) is satisfied at the next ACTIVATE command time (T27).
6. CA parity = Disable, CS to CA latency = Disable, Read DBI = Disable.

Micron Technology, Inc. reserves the right to change products or specifications without notice.
© 2018 Micron Technology, Inc. All rights reserved.

READ Operation with Read Data Bus Inversion (DBI)

Figure 157: Consecutive READ (BL8) with 1tCK Preamble and DBI in Different Bank Group

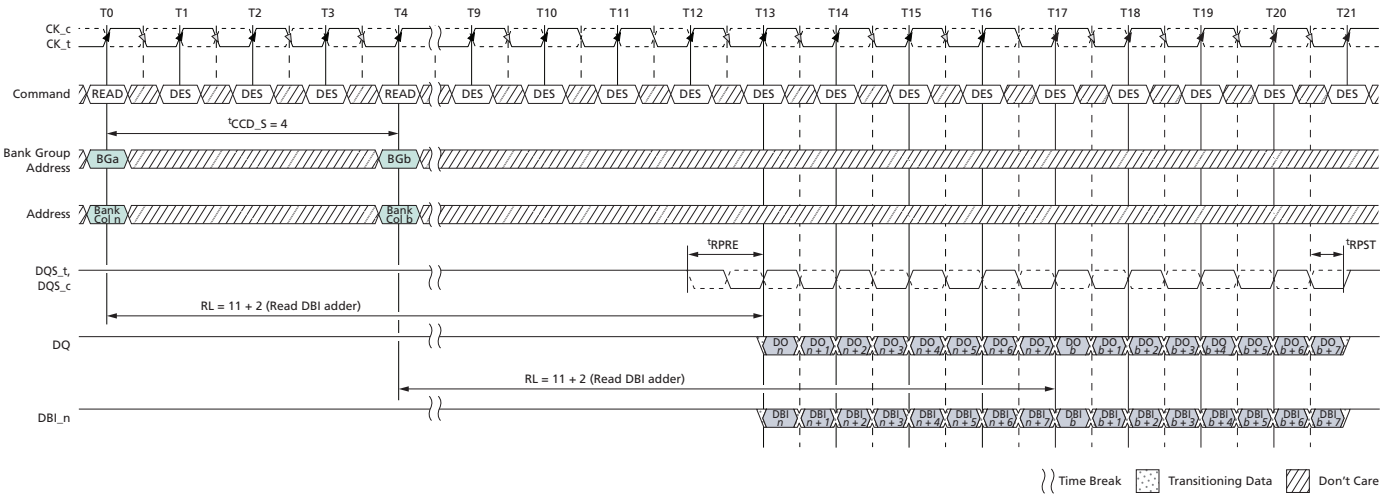

Notes: 1. BL = 8, AL = 0, CL = 11, Preamble = 1tCK, RL = 11 + 2 (Read DBI adder).
2. DO *n* (or *b*) = data-out from column *n* (or *b*); DBI *n* (or *b*) = data bus inversion from column *n* (or *b*).
3. DES commands are shown for ease of illustration; other commands may be valid at these times.
4. BL8 setting activated by either MR0[1:0] = 00 or MR0[1:0] = 01 and A12 = 1 during READ commands at T0 and T4.
5. CA parity = Disable, CS to CA latency = Disable, Read DBI = Enable.

READ Operation with Command/Address Parity (CA Parity)

Figure 158: Consecutive READ (BL8) with 1tCK Preamble and CA Parity in Different Bank Group

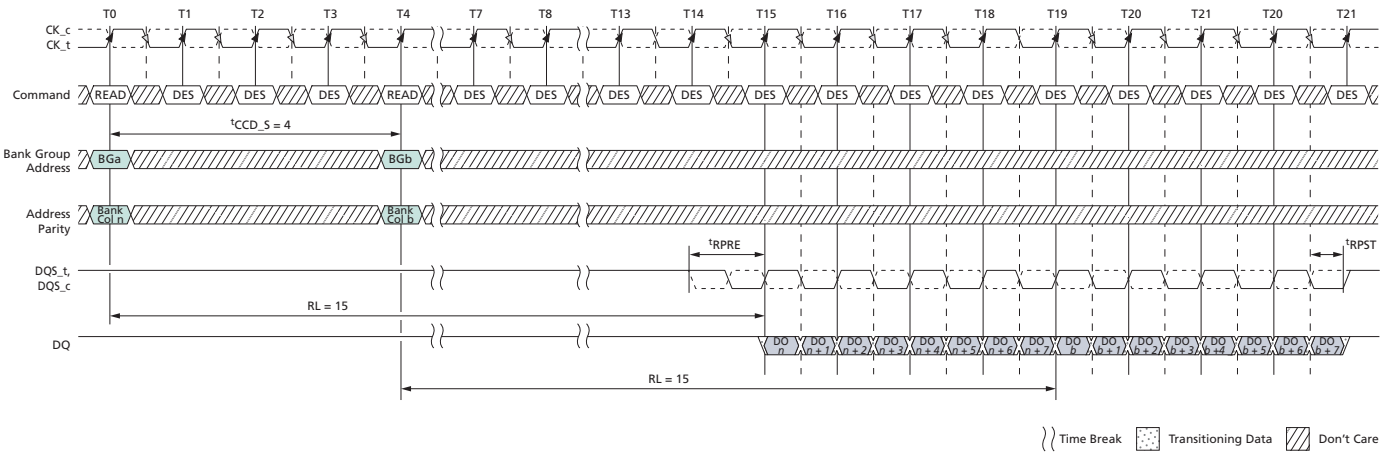

Notes: 1. BL = 8, AL = 0, CL = 11, PL = 4, (RL = CL + AL + PL = 15), Preamble = 1tCK.
2. DO *n* (or *b*) = data-out from column *n* (or *b*).
3. DES commands are shown for ease of illustration; other commands may be valid at these times.
4. BL8 setting activated by either MR0[A1:A0 = 00] or MR0[A1:A0 = 01] and A12 = 1 during READ commands at T0 and T4.
5. CA parity = Enable, CS to CA latency = Disable, Read DBI = Disable.

Micron Technology, Inc. reserves the right to change products or specifications without notice.
© 2018 Micron Technology, Inc. All rights reserved.

Figure 159: READ (BL8) to WRITE (BL8) with 1tCK Preamble and CA Parity in Same or Different Bank Group

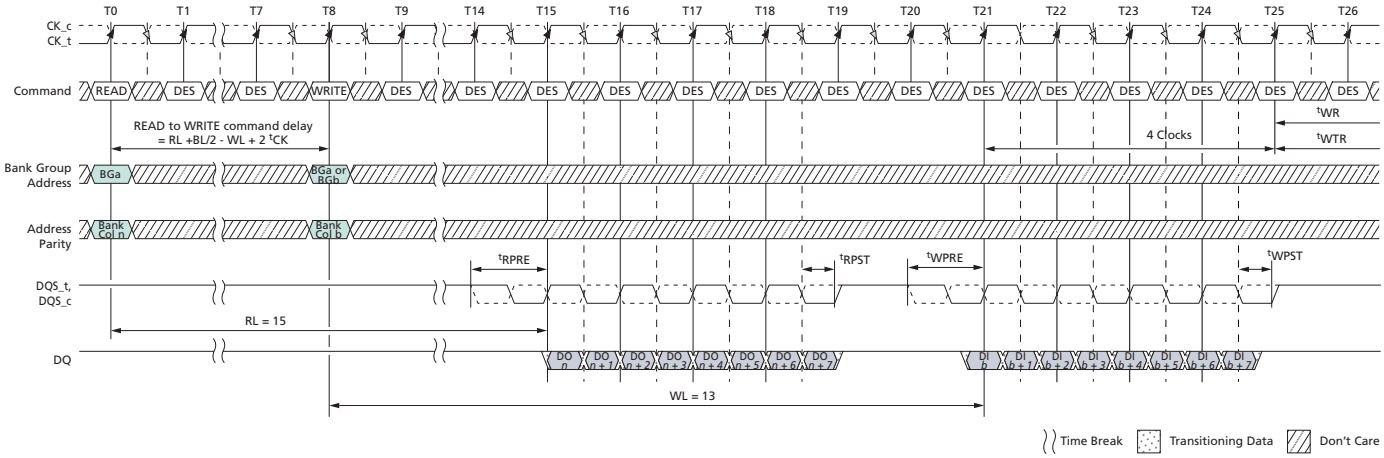

Notes: 1. BL = 8, AL = 0, CL = 11, PL = 4, (RL = CL + AL + PL = 15), READ preamble = 1tCK, CWL = 9, AL = 0, PL = 4, (WL = CL + AL + PL = 13), WRITE preamble = 1tCK.
2. DO *n* = data-out from column *n*, DI *b* = data-in from column *b*.
3. DES commands are shown for ease of illustration; other commands may be valid at these times.
4. BL8 setting activated by either MR0[1:0] = 00 or MR0[1:0] = 01 and A12 = 1 during READ commands at T0 and WRITE command at T8.
5. CA parity = Enable, CS to CA latency = Disable, Read DBI = Disable, Write DBI = Disable, Write CRC = Disable.

READ Followed by WRITE with CRC Enabled

Figure 160: READ (BL8) to WRITE (BL8 or BC4: OTF) with 1tCK Preamble and Write CRC in Same or Different Bank Group

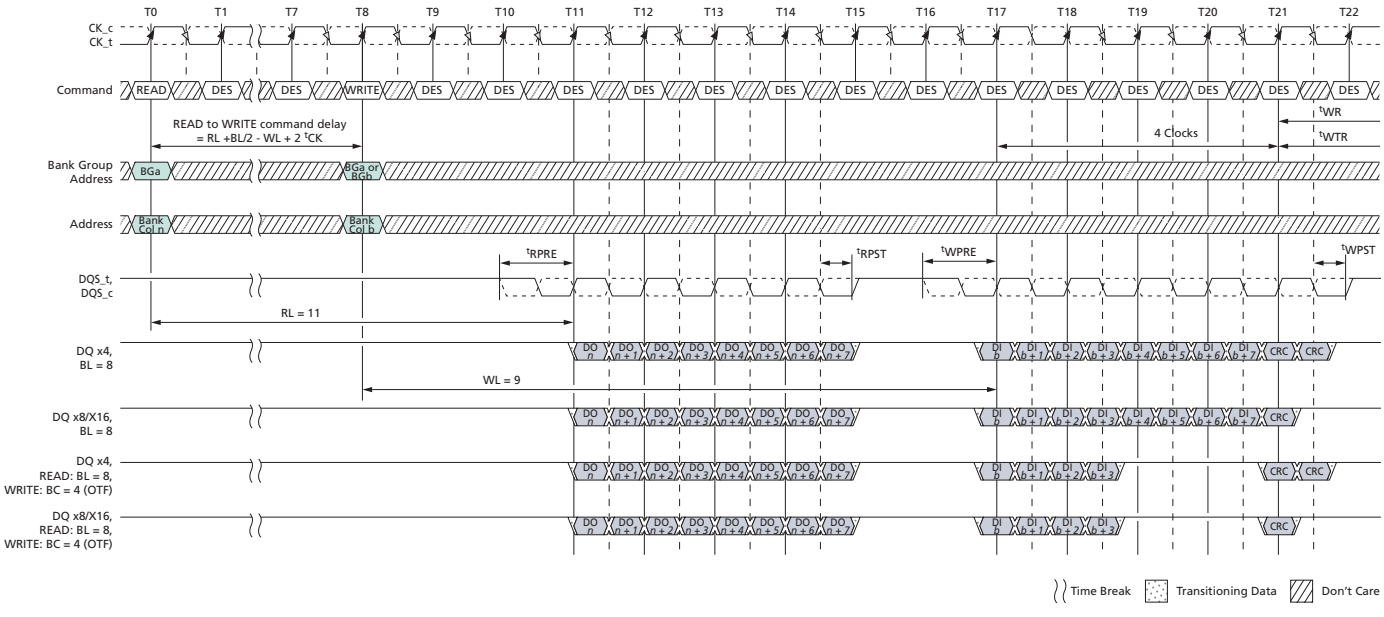

Notes: 1. BL = 8 (or BC = 4: OTF for Write), RL = 11 (CL = 11, AL = 0), READ preamble = 1tCK, WL = 9 (CWL = 9, AL = 0), WRITE preamble = 1tCK.
2. DO *n* = data-out from column *n*, DI *b* = data-in from column *b*.

Micron Technology, Inc. reserves the right to change products or specifications without notice.
© 2018 Micron Technology, Inc. All rights reserved.

3. DES commands are shown for ease of illustration; other commands may be valid at these times.
4. BL8 setting activated by either MR0[1:0] = 00 or MR0[1:0] = 01 and A12 = 1 during READ commands at T0 and WRITE commands at T8.
5. BC4 setting activated by MR0[1:0] = 01 and A12 = 0 during WRITE commands at T8.
6. CA parity = Disable, CS to CA latency = Disable, Read DBI = Disable, Write DBI = Disable, Write CRC = Enable.

Micron Technology, Inc. reserves the right to change products or specifications without notice.
© 2018 Micron Technology, Inc. All rights reserved.

Figure 161: READ (BC4: Fixed) to WRITE (BC4: Fixed) with 1tCK Preamble and Write CRC in Same or Different Bank Group

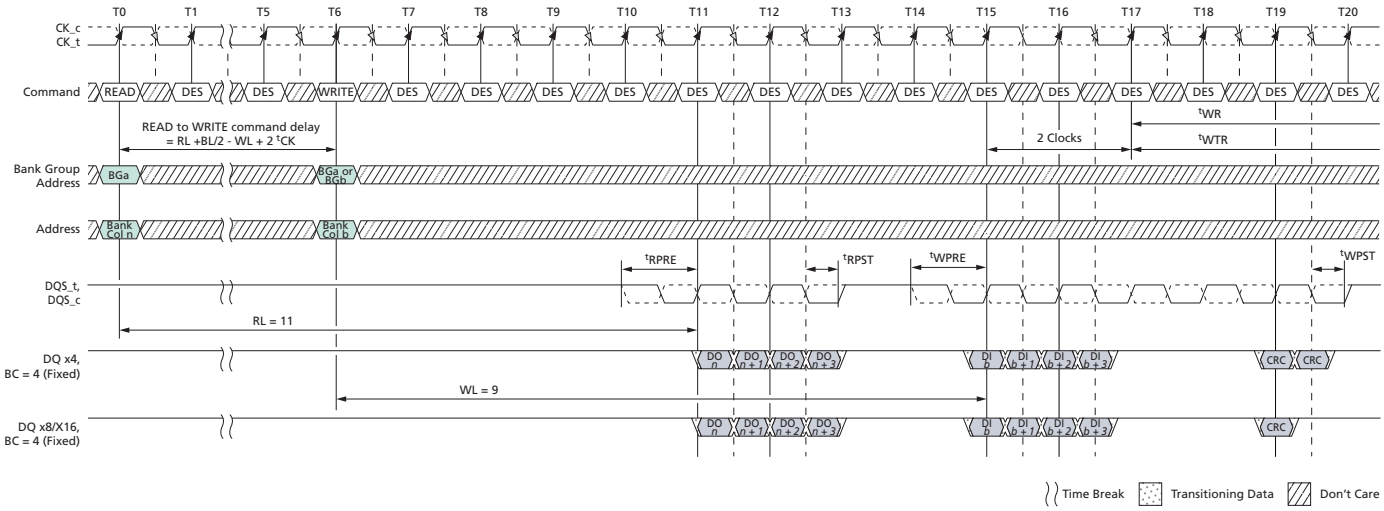

Notes: 1. BC = 4 (Fixed), RL = 11 (CL = 11, AL = 0), READ preamble = 1tCK, WL = 9 (CWL = 9, AL = 0), WRITE preamble = 1tCK.
2. DO *n* = data-out from column *n*, DI *b* = data-in from column *b*.
3. DES commands are shown for ease of illustration; other commands may be valid at these times.
4. BC4 setting activated by MR0[1:0] = 10.
5. CA parity = Disable, CS to CA latency = Disable, Read DBI = Disable, Write DBI = Disable, Write CRC = Enable.

READ Operation with Command/Address Latency (CAL) Enabled

Figure 162: Consecutive READ (BL8) with CAL (3tCK) and 1tCK Preamble in Different Bank Group

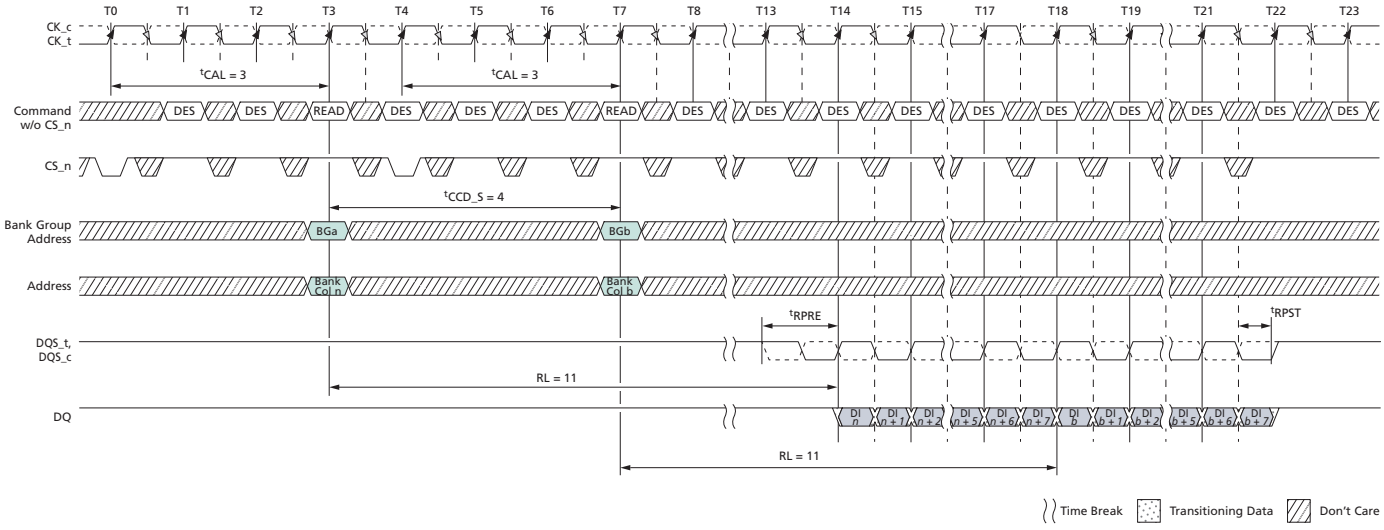

Notes: 1. BL = 8, RL = 11 (CL = 11, AL = 0), READ preamble = 1tCK.
2. DI *n* (or *b*) = data-in from column *n* (or *b*).
3. DES commands are shown for ease of illustration; other commands may be valid at these times.
4. BL8 setting activated by either MR0[1:0] = 00 or MR0[1:0] = 01 and A12 = 1 during READ commands at T3 and T7.
5. CA parity = Disable, CS to CA latency = Enable, Read DBI = Disable, Write DBI = Disable, Write CRC = Disable.
6. Enabling CAL mode does not impact ODT control timings. The same timing relationship relative to the command/address bus as when CAL is disabled should be maintained.

Micron Technology, Inc. reserves the right to change products or specifications without notice.
© 2018 Micron Technology, Inc. All rights reserved.

Figure 163: Consecutive READ (BL8) with CAL (4tCK) and 1tCK Preamble in Different Bank Group

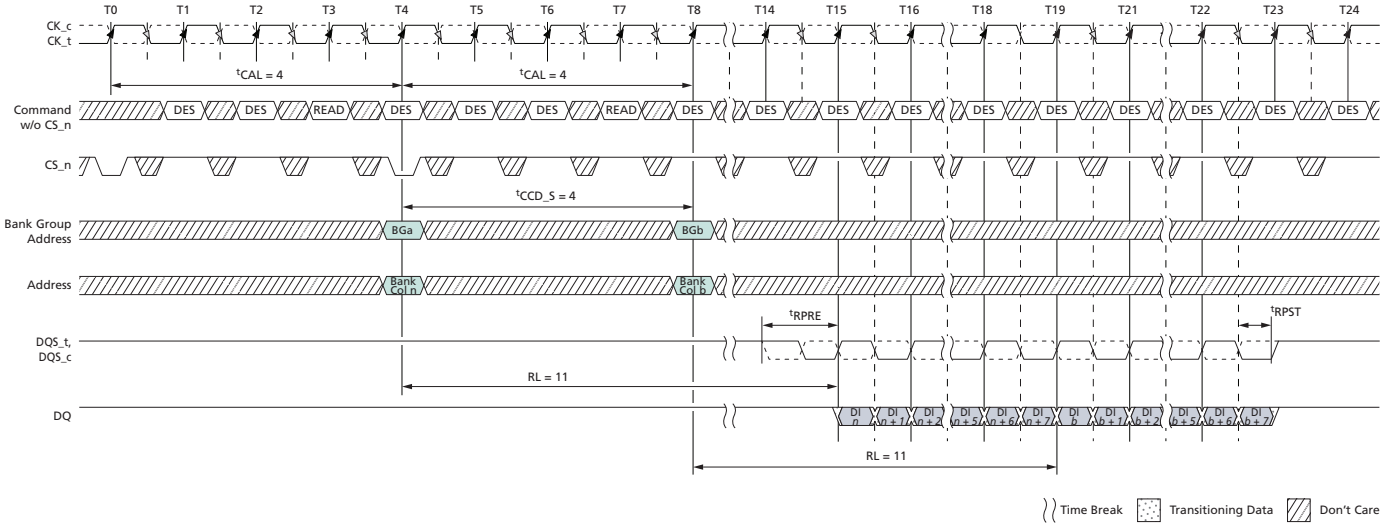

Notes: 1. BL = 8, RL = 11 (CL = 11, AL = 0), READ preamble = 1tCK.
2. DI *n* (or *b*) = data-in from column *n* (or *b*).
3. DES commands are shown for ease of illustration; other commands may be valid at these times.
4. BL8 setting activated by either MR0[1:0] = 00 or MR0[1:0] = 01 and A12 = 1 during READ commands at T3 and T8.
5. CA parity = Disable, CS to CA latency = Enable, Read DBI = Disable, Write DBI = Disable, Write CRC = Disable.
6. Enabling CAL mode does not impact ODT control timings. The same timing relationship relative to the command/address bus as when CAL is disabled should be maintained.

Micron Technology, Inc. reserves the right to change products or specifications without notice.
© 2018 Micron Technology, Inc. All rights reserved.

WRITE Operation

Write Timing Definitions

The write timings shown in the following figures are applicable in normal operation mode, that is, when the DLL is enabled and locked.

Write Timing – Clock-to-Data Strobe Relationship

The clock-to-data strobe relationship is shown below and is applicable in normal operation mode, that is, when the DLL is enabled and locked.

Rising data strobe edge parameters:

- ^{t}DQSS (MIN) to ^{t}DQSS (MAX) describes the allowed range for a rising data strobe edge relative to CK.
- ^{t}DQSS is the actual position of a rising strobe edge relative to CK.
- ^{t}DQSH describes the data strobe high pulse width.
- ^{t}WPST strobe going to HIGH, nondrive level (shown in the postamble section of the graphic below).

Falling data strobe edge parameters:

- ^{t}DQSL describes the data strobe low pulse width.
- ^{t}WPRE strobe going to LOW, initial drive level (shown in the preamble section of the graphic below).

Micron Technology, Inc. reserves the right to change products or specifications without notice.
© 2018 Micron Technology, Inc. All rights reserved.

Figure 164: Write Timing Definition

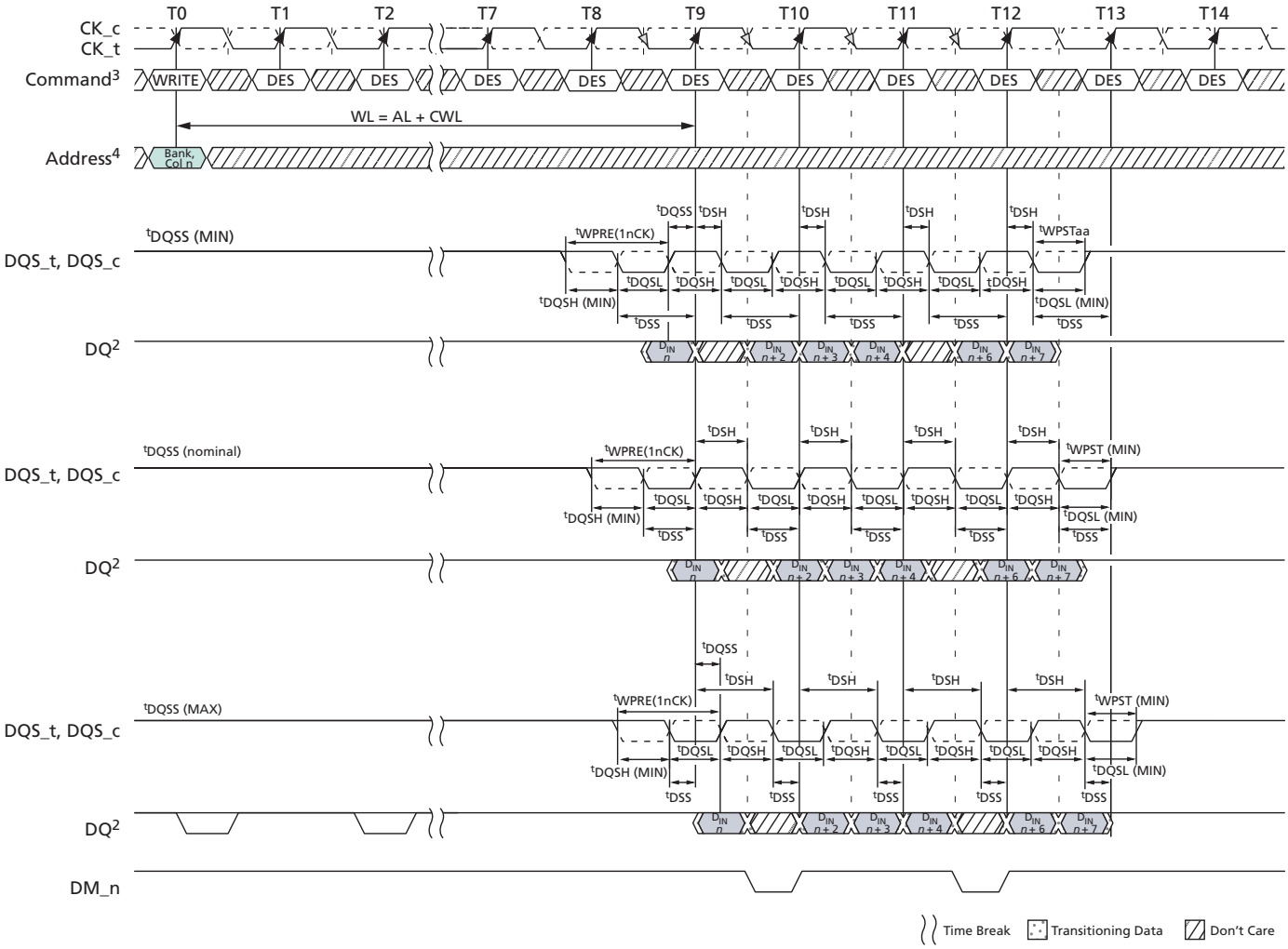

Notes: 1. BL8, WL = 9 (AL = 0, CWL = 9).
2. D_{IN} *n* = data-in from column *n*.
3. DES commands are shown for ease of illustration; other commands may be valid at these times.
4. BL8 setting activated by either MR0[1:0] = 00 or MR0[1:0] = 01 and A12 = 1 during WRITE command at T0.
5. ^{t}DQSS must be met at each rising clock edge.

Micron Technology, Inc. reserves the right to change products or specifications without notice.
© 2018 Micron Technology, Inc. All rights reserved.

^{t}WPRE Calculation

Figure 165: ^{t}WPRE Method for Calculating Transitions and Endpoints

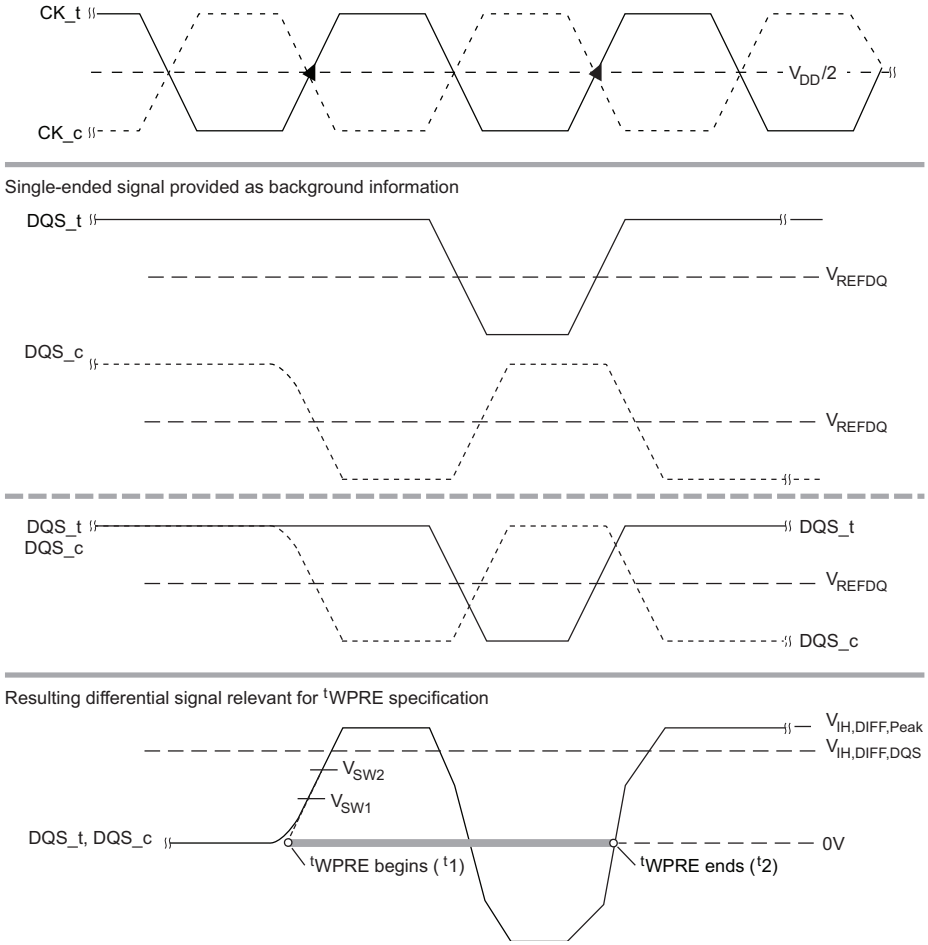

Notes: 1. $V_{sw1} = (0.1) \times V_{IH,diff,DQS}$.
2. $V_{sw2} = (0.9) \times V_{IH,diff,DQS}$.

Micron Technology, Inc. reserves the right to change products or specifications without notice.
© 2018 Micron Technology, Inc. All rights reserved.

tWPST Calculation

Figure 166: tWPST Method for Calculating Transitions and Endpoints

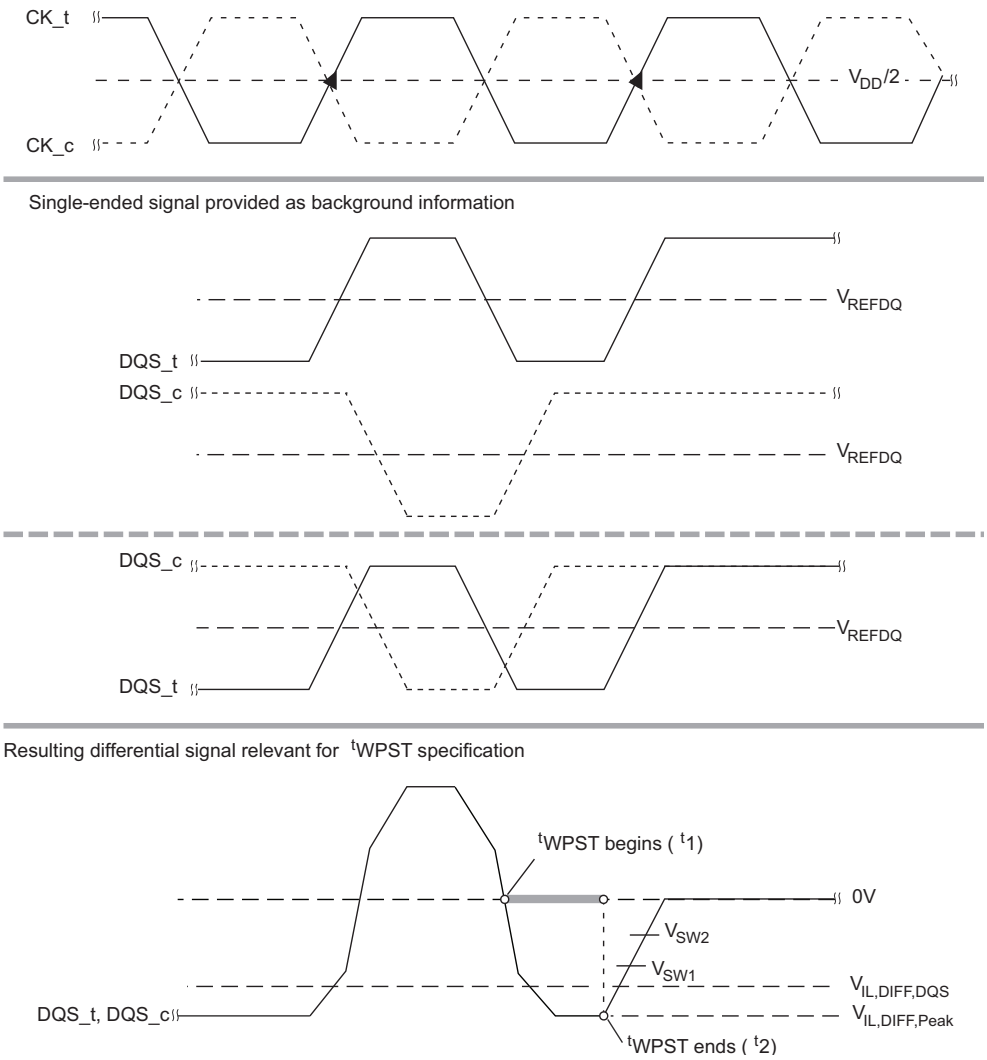

Notes: 1. V_{sw1} =(0.9) × $V_{IL,diff,DQS}$.
2. V_{sw2} = (0.1) × $V_{IL,diff,DQS}$.

Write Timing – Data Strobe-to-Data Relationship

The DQ input receiver uses a compliance mask (Rx) for voltage and timing as shown in the figure below. The receiver mask (Rx mask) defines the area where the input signal must not encroach in order for the DRAM input receiver to be able to successfully capture a valid input signal. The Rx mask is not the valid data-eye. TdiVW and V_{diVW} define the absolute maximum Rx mask.

Micron Technology, Inc. reserves the right to change products or specifications without notice.
© 2018 Micron Technology, Inc. All rights reserved.

Figure 167: Rx Compliance Mask

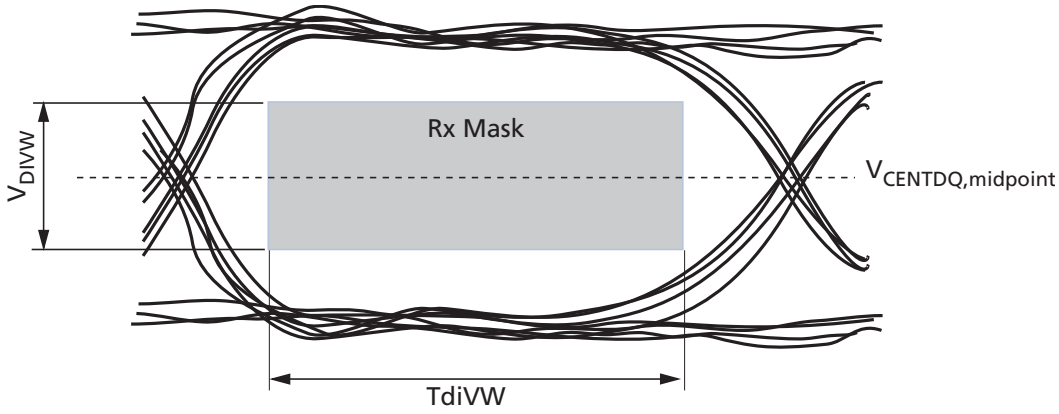

$V_{CENTDQ,midpoint}$ is defined as the midpoint between the largest V_{REFDQ} voltage level and the smallest V_{REFDQ} voltage level across all DQ pins for a given DRAM. Each DQ pin's V_{REFDQ} is defined by the center (widest opening) of the cumulative data input eye as depicted in the following figure. This means a DRAM's level variation is accounted for within the DRAM Rx mask. The DRAM V_{REFDQ} level will be set by the system to account for R_{ON} and ODT settings.

Figure 168: V_{CENT_DQ} V_{REFDQ} Voltage Variation

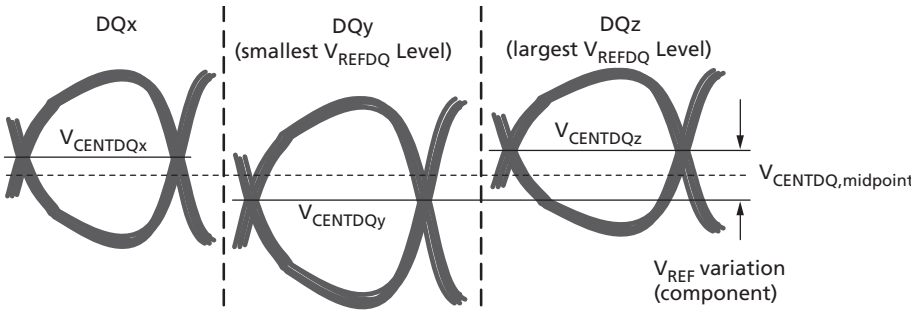

The following figure shows the Rx mask requirements both from a midpoint-to-midpoint reference (left side) and from an edge-to-edge reference. The intent is not to add any new requirement or specification between the two but rather how to convert the relationship between the two methodologies. The minimum data-eye shown in the composite view is not actually obtainable due to the minimum pulse width requirement.

Micron Technology, Inc. reserves the right to change products or specifications without notice.
© 2018 Micron Technology, Inc. All rights reserved.

Figure 169: Rx Mask DQ-to-DQS Timings

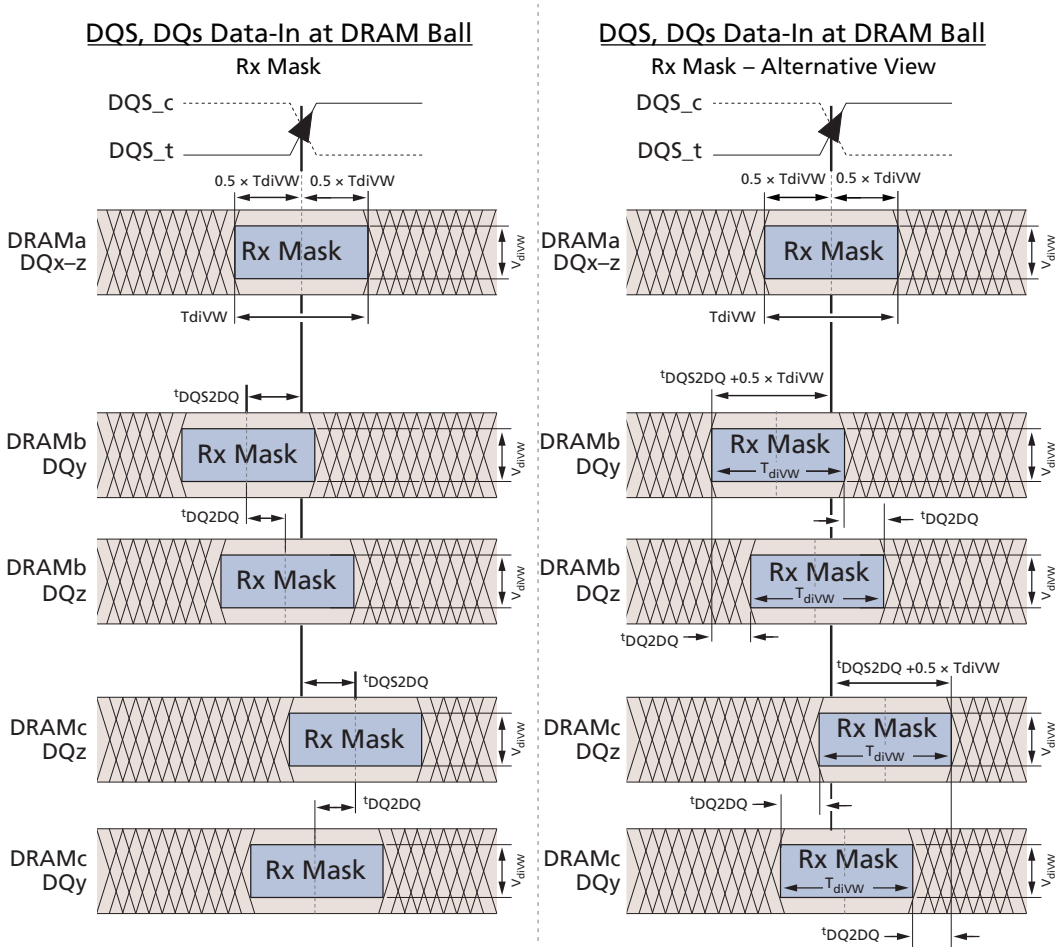

Notes: 1. DQx represents an optimally centered mask.
DQy represents earliest valid mask.
DQz represents latest valid mask.

2. DRAMa represents a DRAM without any DQS/DQ skews.
DRAMb represents a DRAM with early skews (negative ^{t}DQS2DQ).
DRAMc represents a DRAM with delayed skews (positive ^{t}DQS2DQ).

3. This figure shows the skew allowed between DRAM-to-DRAM and between DQ-to-DQ for a DRAM. Signals assume data is center-aligned at DRAM latch.
TdiPW is not shown; composite data-eyes shown would violate TdiPW.
$V_{CENTDQ,midpoint}$ is not shown but is assumed to be midpoint of V_{diVW}.

The previous figure shows the basic Rx mask requirements. Converting the Rx mask requirements to a classical DQ-to-DQS relationship is shown in the following figure. It should become apparent that DRAM write training is required to take full advantage of the Rx mask.

Micron Technology, Inc. reserves the right to change products or specifications without notice.
© 2018 Micron Technology, Inc. All rights reserved.

Figure 170: Rx Mask DQ-to-DQS DRAM-Based Timings

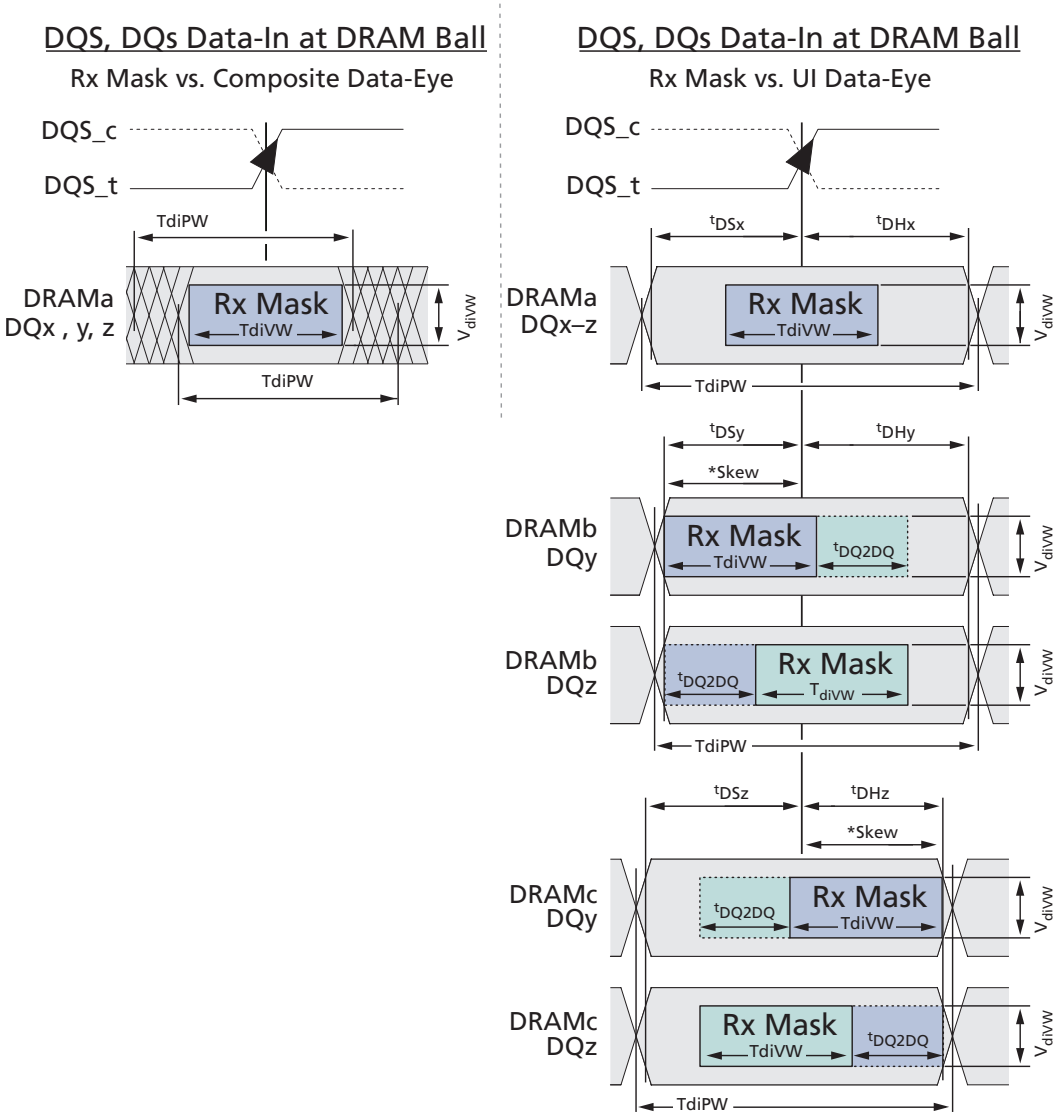

Notes: 1. DQx represents an optimally centered mask.
DQy represents earliest valid mask.
DQz represents latest valid mask.

2. *Skew = ^{t}DQS2DQ + 0.5 × TdiVW
DRAMa represents a DRAM without any DQS/DQ skews.
DRAMb represents a DRAM with the earliest skews (negative ^{t}DQS2DQ, ^{t}DQSy > *Skew).
DRAMc represents a DRAM with the latest skews (positive ^{t}DQS2DQ, ^{t}DQHz > *Skew).

3. ^{t}DS/^{t}DH are traditional data-eye setup/hold edges at DC levels.
^{t}DS and ^{t}DH are not specified; ^{t}DH and ^{t}DS may be any value provided the pulse width and Rx mask limits are not violated.
^{t}DH (MIN) > TdiVW + ^{t}DS (MIN) + ^{t}DQ2DQ.

The DDR4 SDRAM's input receivers are expected to capture the input data with an Rx mask of TdiVW provided the minimum pulse width is satisfied. The DRAM controller will have to train the data input buffer to utilize the Rx mask specifications to this maximum benefit. If the DRAM controller does not

Micron Technology, Inc. reserves the right to change products or specifications without notice.
© 2018 Micron Technology, Inc. All rights reserved.

train the data input buffers, then the worst case limits have to be used for the Rx mask (TdiVW + 2 × ^{t}DQS2DQ), which will generally be the classical minimum (^{t}DS and ^{t}DH) and is required as well.

Figure 171: Example of Data Input Requirements Without Training

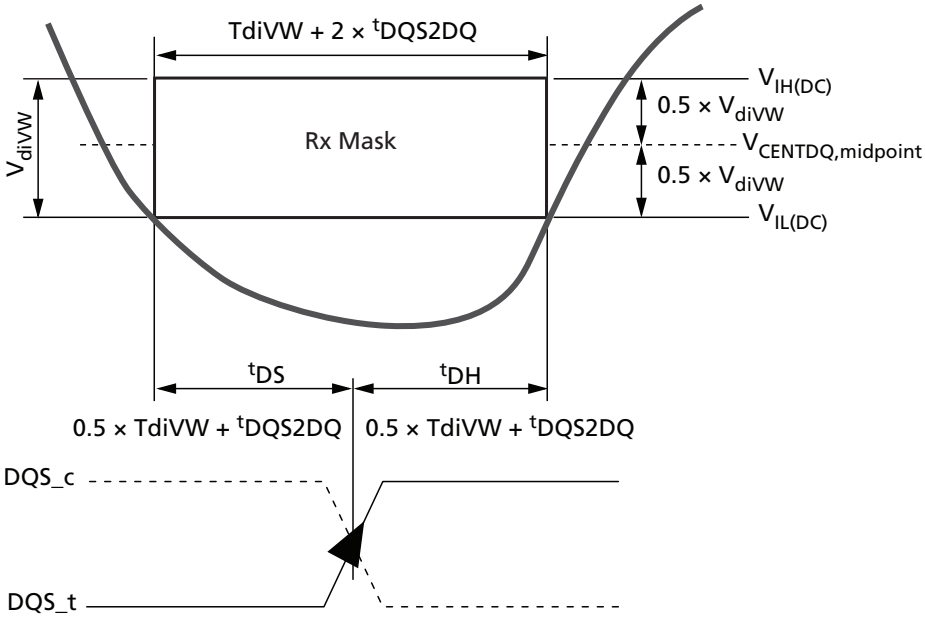

WRITE Burst Operation

The following write timing diagrams are intended to help understand each write parameter's meaning and are only examples. Each parameter will be defined in detail separately. In these write timing diagrams, CK and DQS are shown aligned, and DQS and DQ are shown center-aligned for the purpose of illustration.

DDR4 WRITE command supports bursts of BL8 (fixed), BC4 (fixed), and BL8/BC4 on-the-fly (OTF); OTF uses address A12 to control OTF when OTF is enabled:

- A12 = 0, BC4 (BC4 = burst chop)
- A12 = 1, BL8

WRITE commands can issue precharge automatically with a WRITE with auto precharge (WRA) command, which is enabled by A10 HIGH.

- WRITE command with A10 = 0 (WR) performs standard write, bank remains active after WRITE burst
- WRITE command with A10 = 1 (WRA) performs write with auto precharge, bank goes into precharge after WRITE burst

The DATA MASK (DM) function is supported for the x8 and x16 configurations only (the DM function is not supported on x4 devices). The DM function shares a common pin with the DBI_n and TDQS functions. The DM function only applies to WRITE operations and cannot be enabled at the same time the DBI function is enabled.

- If DM_n is sampled LOW on a given byte lane, the DRAM masks the write data received on the DQ inputs.
- If DM_n is sampled HIGH on a given byte lane, the DRAM does not mask the data and writes this data into the DRAM core.
- If CRC write is enabled, then DM enabled (via MRS) will be selected between write CRC nonpersistent mode (DM disabled) and write CRC persistent mode (DM enabled).

Micron Technology, Inc. reserves the right to change products or specifications without notice.
© 2018 Micron Technology, Inc. All rights reserved.

Figure 172: WRITE Burst Operation, WL = 9 (AL = 0, CWL = 9, BL8)

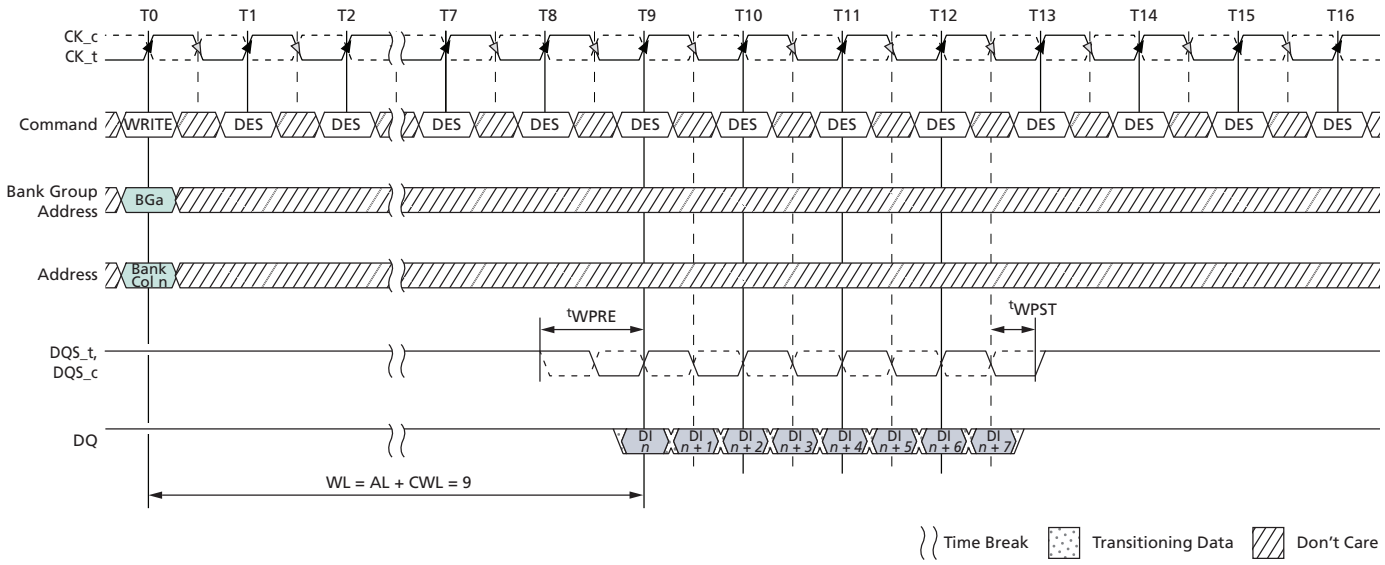

Notes: 1. BL8, WL = 0, AL = 0, CWL = 9, Preamble = 1tCK.
2. DI *n* = Data-in from column *n*.
3. DES commands are shown for ease of illustration; other commands may be valid at these times.
4. BL8 setting activated by either MR0[1:0] = 00 or MR0[1:0] = 01 and A12 = 1 during WRITE command at T0.
5. CA parity = Disable, CS to CA Latency = Disable, Read DBI = Disable.

Figure 173: WRITE Burst Operation, WL = 19 (AL = 10, CWL = 9, BL8)

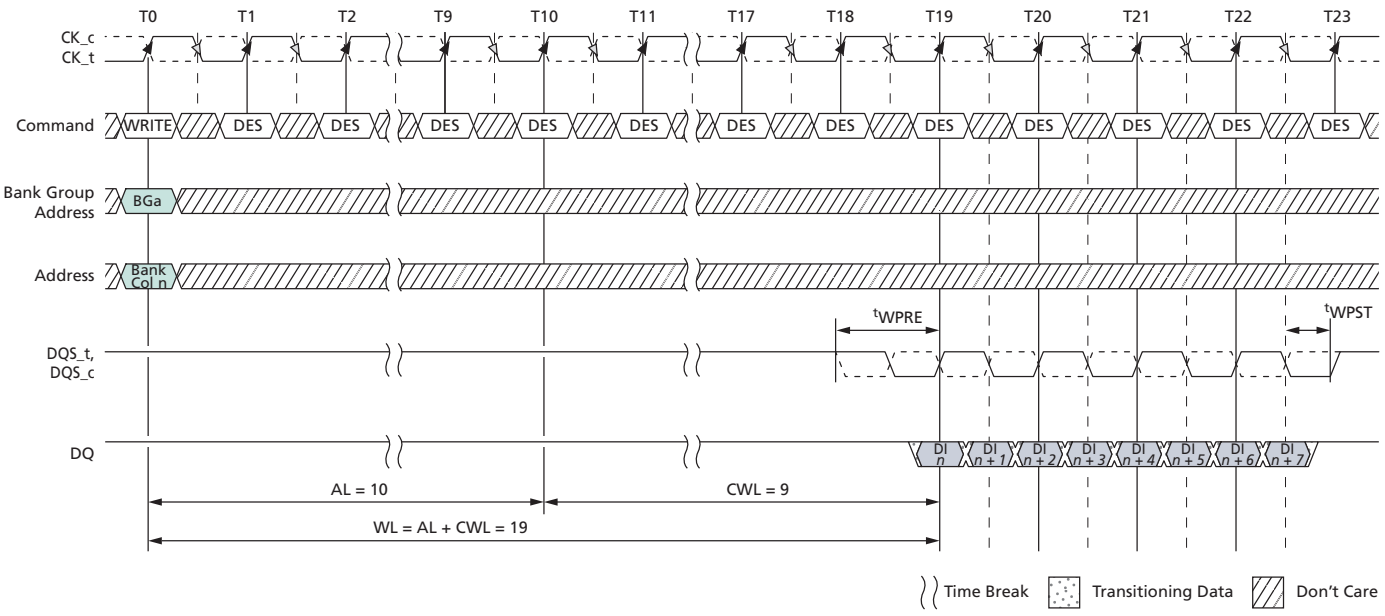

Notes: 1. BL8, WL = 19, AL = 10 (CL - 1), CWL = 9, Preamble = 1tCK.
2. DI *n* = data-in from column *n*.
3. DES commands are shown for ease of illustration; other commands may be valid at these times.
4. BL8 setting activated by either MR0[1:0] = 00 or MR0[1:0] = 01 and A12 = 1 during WRITE command at T0.
5. CA parity = Disable, CS to CA latency = Disable, Read DBI = Disable.

Micron Technology, Inc. reserves the right to change products or specifications without notice.
© 2018 Micron Technology, Inc. All rights reserved.

WRITE Operation Followed by Another WRITE Operation

Figure 174: Consecutive WRITE (BL8) with 1tCK Preamble in Different Bank Group

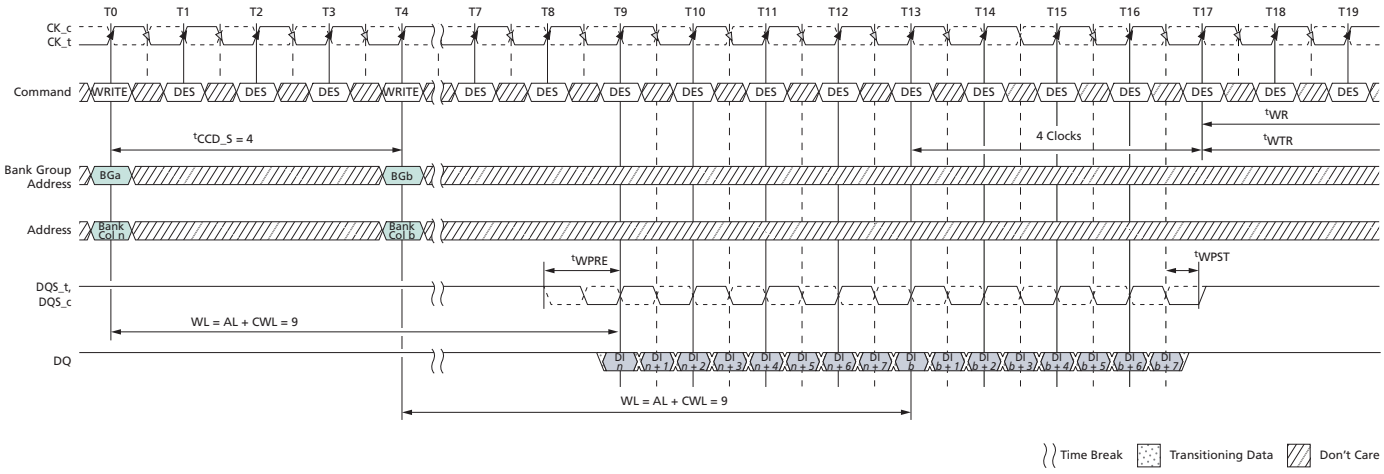

Notes: 1. BL8, AL = 0, CWL = 9, Preamble = 1tCK.
2. DI *n* (or *b*) = data-in from column *n* (or column *b*).
3. DES commands are shown for ease of illustration; other commands may be valid at these times.
4. BL8 setting activated by either MR0[1:0] = 00 or MR0[1:0] = 01 and A12 = 1 during WRITE commands at T0 and T4.
5. CA parity = Disable, CS to CA latency = Disable, Write DBI = Disable, Write CRC = Disable.
6. The write recovery time (tWR) and write timing parameter (tWTR) are referenced from the first rising clock edge after the last write data shown at T17.

Figure 175: Consecutive WRITE (BL8) with 2tCK Preamble in Different Bank Group

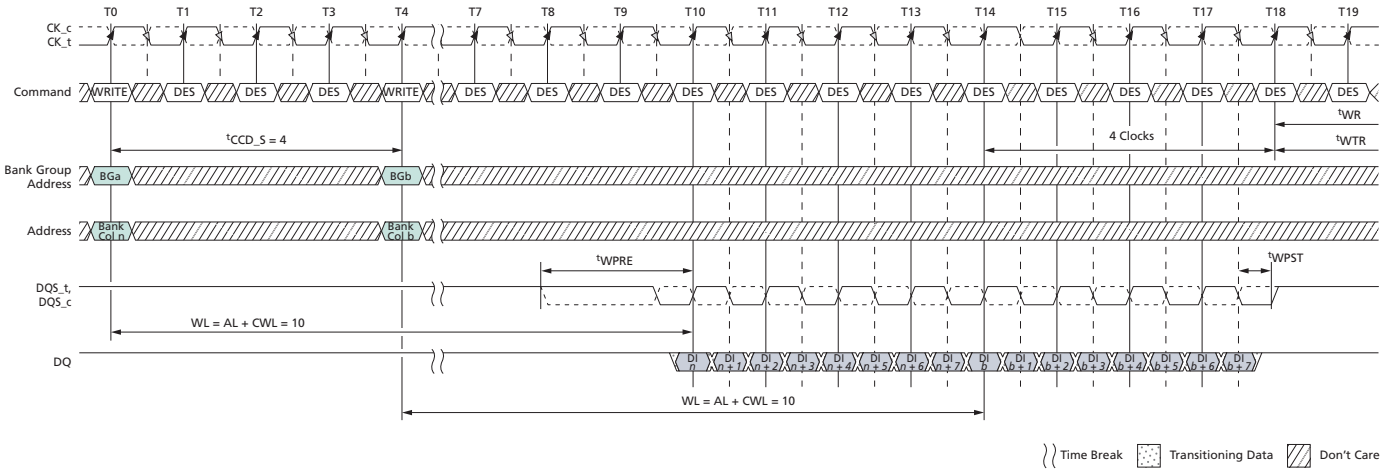

Notes: 1. BL8, AL = 0, CWL = 9 + 1 = 10 (see Note 7), Preamble = 2tCK.
2. DI *n* (or *b*) = data-in from column *n* (or column *b*).
3. DES commands are shown for ease of illustration; other commands may be valid at these times.
4. BL8 setting activated by either MR0[1:0] = 00 or MR0[1:0] = 01 and A12 = 1 during WRITE commands at T0 and T4.
5. CA parity = Disable, CS to CA latency = Disable, Write DBI = Disable, Write CRC = Disable.
6. The write recovery time (tWR) and write timing parameter (tWTR) are referenced from the first rising clock edge after the last write data shown at T17.

Micron Technology, Inc. reserves the right to change products or specifications without notice.
© 2018 Micron Technology, Inc. All rights reserved.

7. When operating in 2tCK WRITE preamble mode, CWL may need to be programmed to a value at least 1 clock greater than the lowest CWL setting supported in the applicable tCK range, which means CWL = 9 is not allowed when operating in 2tCK WRITE preamble mode.

Figure 176: Nonconsecutive WRITE (BL8) with 1tCK Preamble in Same or Different Bank Group

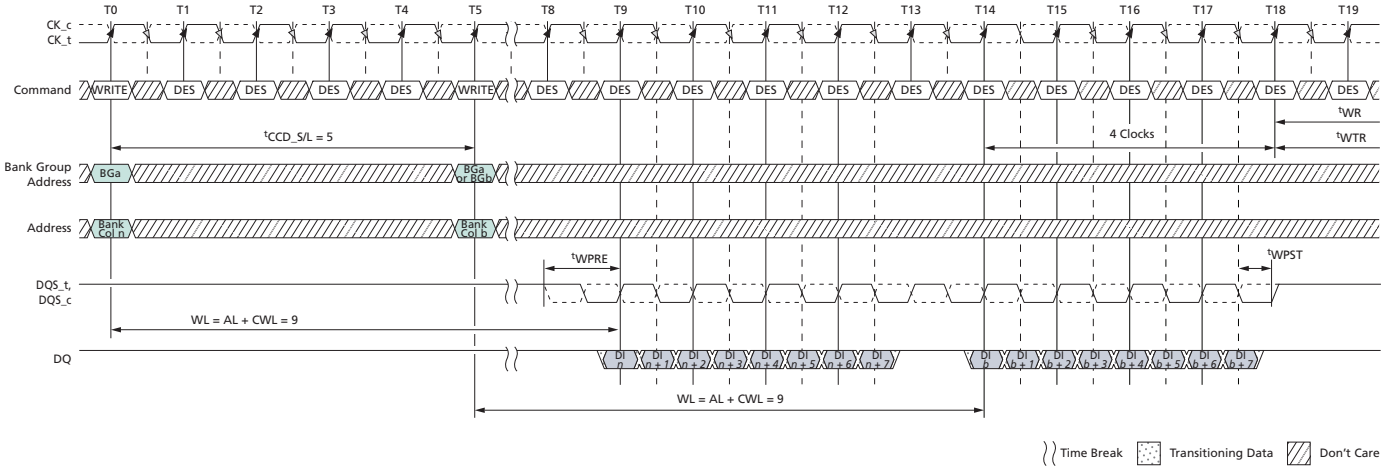

Notes: 1. BL8, AL = 0, CWL = 9, Preamble = 1tCK, tCCD_S/L = 5tCK.
2. DI *n* (or *b*) = data-in from column *n* (or column *b*).
3. DES commands are shown for ease of illustration; other commands may be valid at these times.
4. BL8 setting activated by either MR0[1:0] = 00 or MR0[1:0] = 01 and A12 = 1 during WRITE commands at T0 and T5.
5. CA parity = Disable, CS to CA latency = Disable, Write DBI = Disable, Write CRC = Disable.
6. The write recovery time (tWR) and write timing parameter (tWTR) are referenced from the first rising clock edge after the last write data shown at T18.

Figure 177: Nonconsecutive WRITE (BL8) with 2tCK Preamble in Same or Different Bank Group

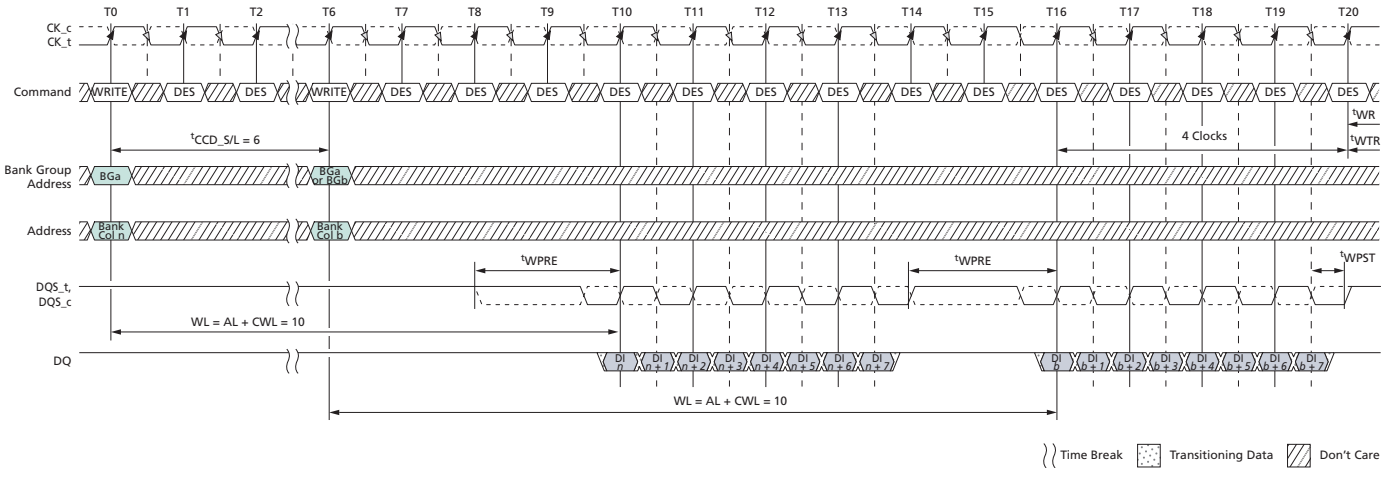

Notes: 1. BL8, AL = 0, CWL = 9 + 1 = 10 (see Note 8), Preamble = 2tCK, tCCD_S/L = 6tCK.
2. DI *n* (or *b*) = data-in from column *n* (or column *b*).
3. DES commands are shown for ease of illustration; other commands may be valid at these times.
4. BL8 setting activated by either MR0[1:0] = 00 or MR0[1:0] = 01 and A12 = 1 during WRITE commands at T0 and T6.
5. CA parity = Disable, CS to CA latency = Disable, Write DBI = Disable, Write CRC = Disable.
6. tCCD_S/L = 5 isn't allowed in 2tCK preamble mode.

Micron Technology, Inc. reserves the right to change products or specifications without notice.
© 2018 Micron Technology, Inc. All rights reserved.

7. The write recovery time (tWR) and write timing parameter (tWTR) are referenced from the first rising clock edge after the last write data shown at T20.
8. When operating in 2tCK WRITE preamble mode, CWL may need to be programmed to a value at least 1 clock greater than the lowest CWL setting supported in the applicable tCK range, which means CWL = 9 is not allowed when operating in 2tCK WRITE preamble mode.

Figure 178: WRITE (BC4) OTF to WRITE (BC4) OTF with 1tCK Preamble in Different Bank Group

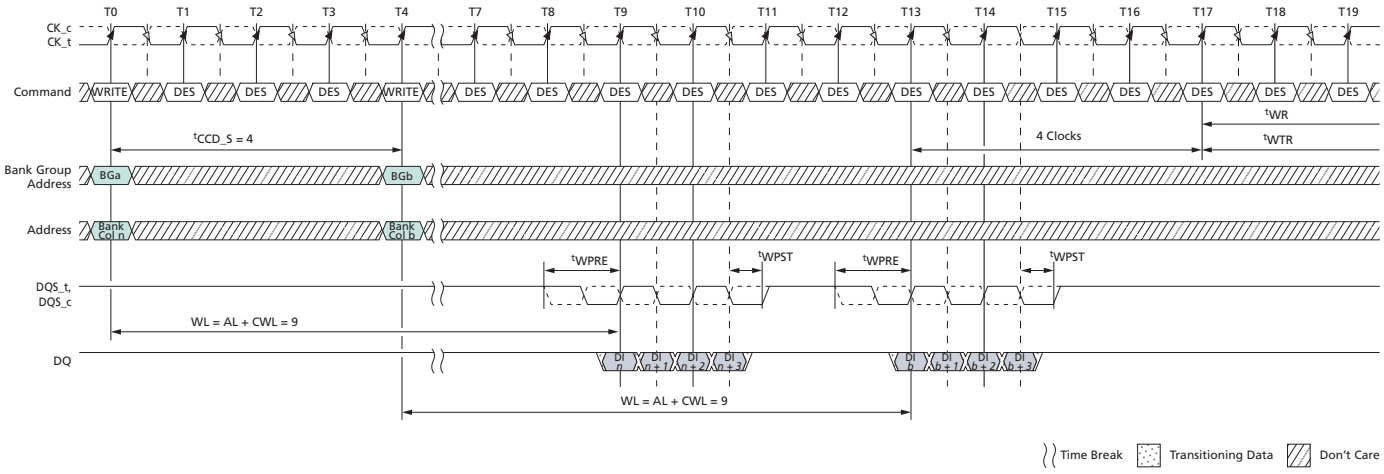

Notes: 1. BC4, AL = 0, CWL = 9, Preamble = 1tCK.
2. DI *n* (or *b*) = data-in from column *n* (or column *b*).
3. DES commands are shown for ease of illustration; other commands may be valid at these times.
4. BC4 setting activated by MR0[1:0] = 01 and A12 = 0 during WRITE commands at T0 and T4.
5. CA parity = Disable, CS to CA latency = Disable, Write DBI = Disable, Write CRC = Disable.
6. The write recovery time (tWR) and write timing parameter (tWTR) are referenced from the first rising clock edge after the last write data shown at T17.

Figure 179: WRITE (BC4) OTF to WRITE (BC4) OTF with 2tCK Preamble in Different Bank Group

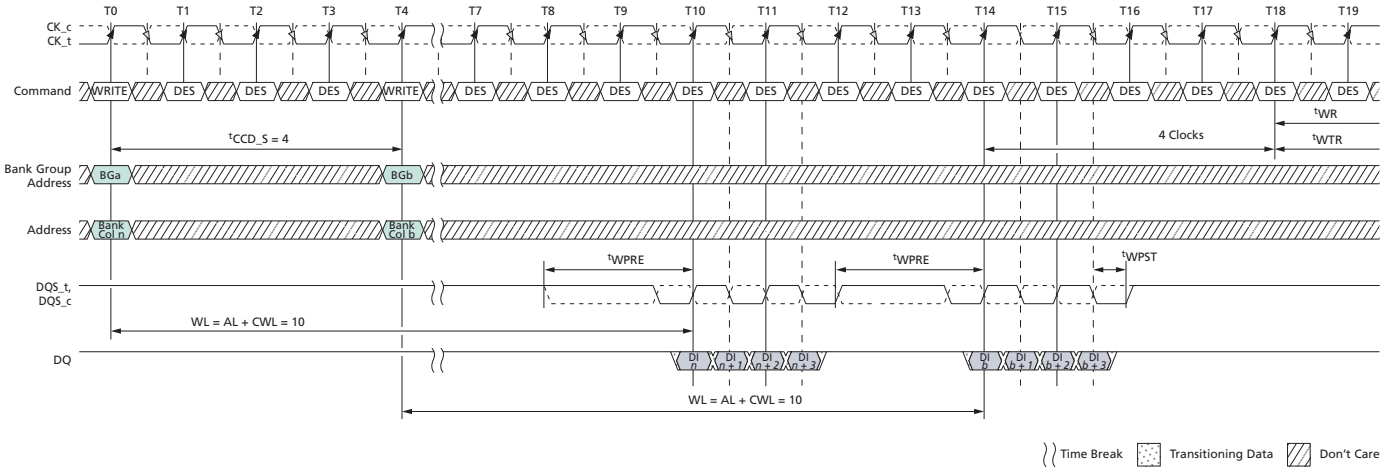

Notes: 1. BC4, AL = 0, CWL = 9 + 1 = 10 (see Note 7), Preamble = 2tCK.
2. DI *n* (or *b*) = data-in from column *n* (or column *b*).
3. DES commands are shown for ease of illustration; other commands may be valid at these times.
4. BC4 setting activated by MR0[1:0] = 01 and A12 = 1 during WRITE commands at T0 and T4.
5. CA parity = Disable, CS to CA latency = Disable, Write DBI = Disable, Write CRC = Disable.

Micron Technology, Inc. reserves the right to change products or specifications without notice.
© 2018 Micron Technology, Inc. All rights reserved.

6. The write recovery time (^{t}WR) and write timing parameter (^{t}WTR) are referenced from the first rising clock edge after the last write data shown at T18.
7. When operating in 2^{t}CK WRITE preamble mode, CWL may need to be programmed to a value at least 1 clock greater than the lowest CWL setting supported in the applicable ^{t}CK range, which means CWL = 9 is not allowed when operating in 2^{t}CK WRITE preamble mode.

Figure 180: WRITE (BC4) Fixed to WRITE (BC4) Fixed with 1^{t}CK Preamble in Different Bank Group

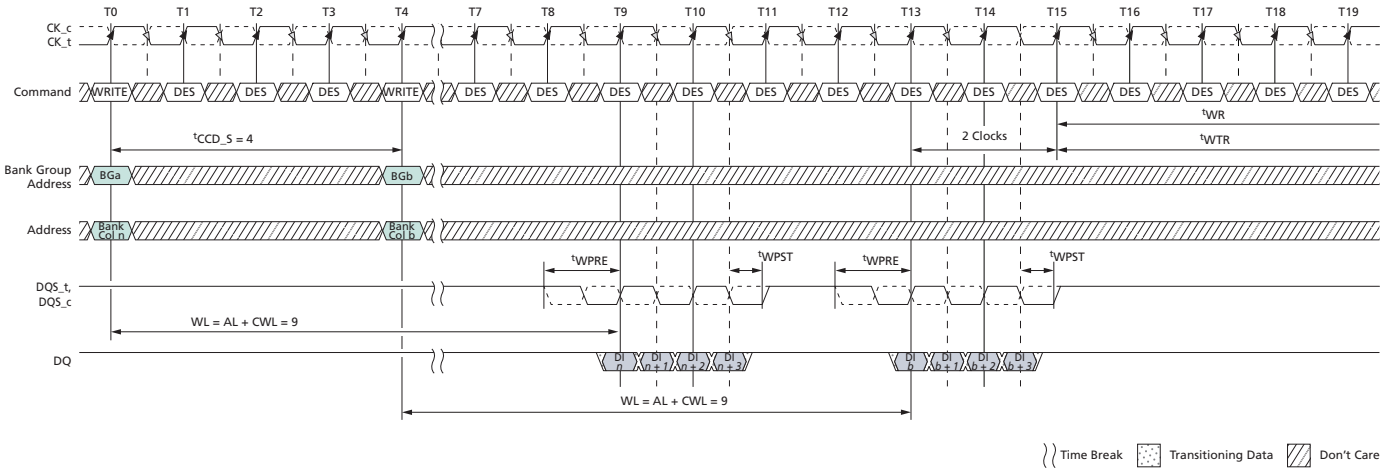

Notes: 1. BC4, AL = 0, CWL = 9, Preamble = 1^{t}CK.
2. DI *n* (or *b*) = data-in from column *n* (or column *b*).
3. DES commands are shown for ease of illustration; other commands may be valid at these times.
4. BC4 (fixed) setting activated by MR0[1:0] = 10.
5. CA parity = Disable, CS to CA latency = Disable, Write DBI = Disable, Write CRC = Disable.
6. The write recovery time (^{t}WR) and write timing parameter (^{t}WTR) are referenced from the first rising clock edge after the last write data shown at T15.

Figure 181: WRITE (BL8) to WRITE (BC4) OTF with 1^{t}CK Preamble in Different Bank Group

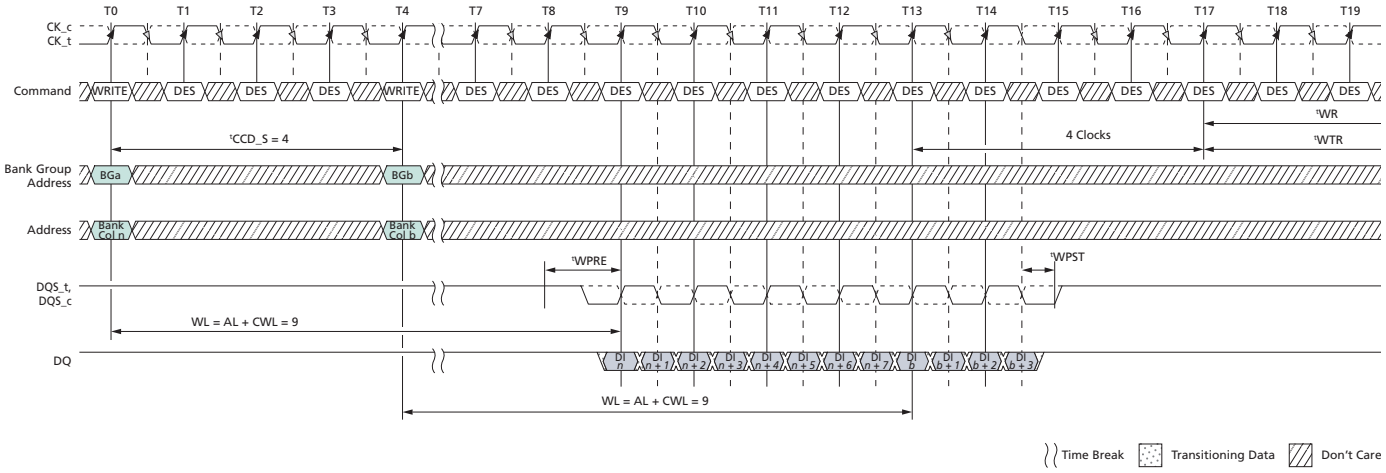

Notes: 1. BL = 8/BC = 4, AL = 0, CL = 9, Preamble = 1^{t}CK.
2. DI *n* (or *b*) = data-in from column *n* (or column *b*).
3. DES commands are shown for ease of illustration; other commands may be valid at these times.
4. BL8 setting activated by MR0[1:0] = 01 and A12 = 1 during WRITE command at T0.
BC4 setting activated by MR0[1:0] = 01 and A12 = 0 during WRITE command at T4.

Micron Technology, Inc. reserves the right to change products or specifications without notice.
© 2018 Micron Technology, Inc. All rights reserved.

5. CA parity = Disable, CS to CA latency = Disable, Read DBI = Disable, Write CRC = Disable.
6. The write recovery time (^{t}WR) and write timing parameter (^{t}WTR) are referenced from the first rising clock edge after the last write data shown at T17.

Figure 182: WRITE (BC4) OTF to WRITE (BL8) with 1^{t}CK Preamble in Different Bank Group

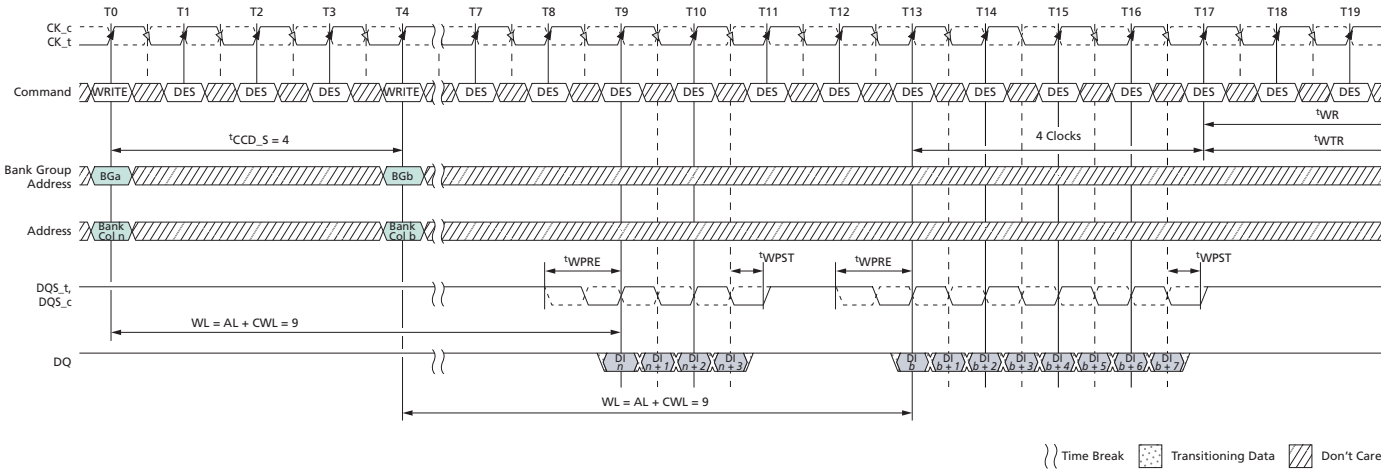

Notes: 1. BL = 8/BC = 4, AL = 0, CL = 9, Preamble = 1^{t}CK.
2. DI *n* (or *b*) = data-in from column *n* (or column *b*).
3. DES commands are shown for ease of illustration; other commands may be valid at these times.
4. BC4 setting activated by MR0[1:0] = 01 and A12 = 0 during WRITE command at T0.
   BL8 setting activated by MR0[1:0] = 01 and A12 = 1 during WRITE command at T4.
5. CA parity = Disable, CS to CA latency = Disable, Read DBI = Disable, Write CRC = Disable.
6. The write recovery time (^{t}WR) and write timing parameter (^{t}WTR) are referenced from the first rising clock edge after the last write data shown at T17.

WRITE Operation Followed by READ Operation

Figure 183: WRITE (BL8) to READ (BL8) with 1^{t}CK Preamble in Different Bank Group

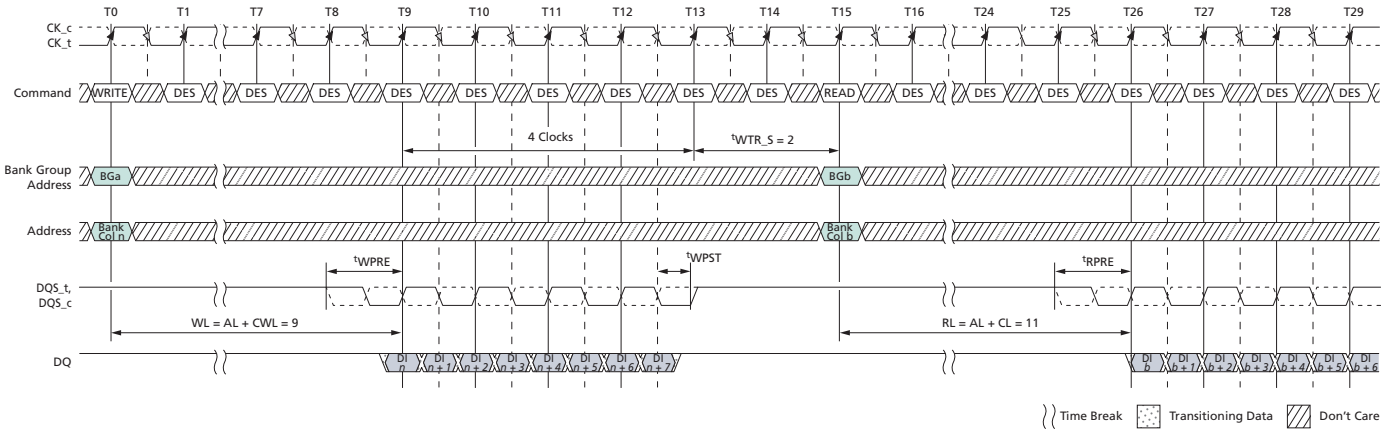

Notes: 1. BL = 8, WL = 9 (CWL = 9, AL = 0), CL = 11, READ preamble = 1^{t}CK, WRITE preamble = 1^{t}CK.
2. DI *b* = data-in from column *b*.
3. DES commands are shown for ease of illustration; other commands may be valid at these times.
4. BL8 setting activated by either MR0[1:0] = 00 or MR0[1:0] = 01 and A12 = 1 during WRITE command at T0 and READ command at T15.

Micron Technology, Inc. reserves the right to change products or specifications without notice.
© 2018 Micron Technology, Inc. All rights reserved.

5. CA parity = Disable, CS to CA latency = Disable, Read DBI = Disable, Write DBI = Disable, Write CRC = Disable.
6. The write timing parameter (^{t}WTR_S) is referenced from the first rising clock edge after the last write data shown at T13.

Figure 184: WRITE (BL8) to READ (BL8) with 1^{t}CK Preamble in Same Bank Group

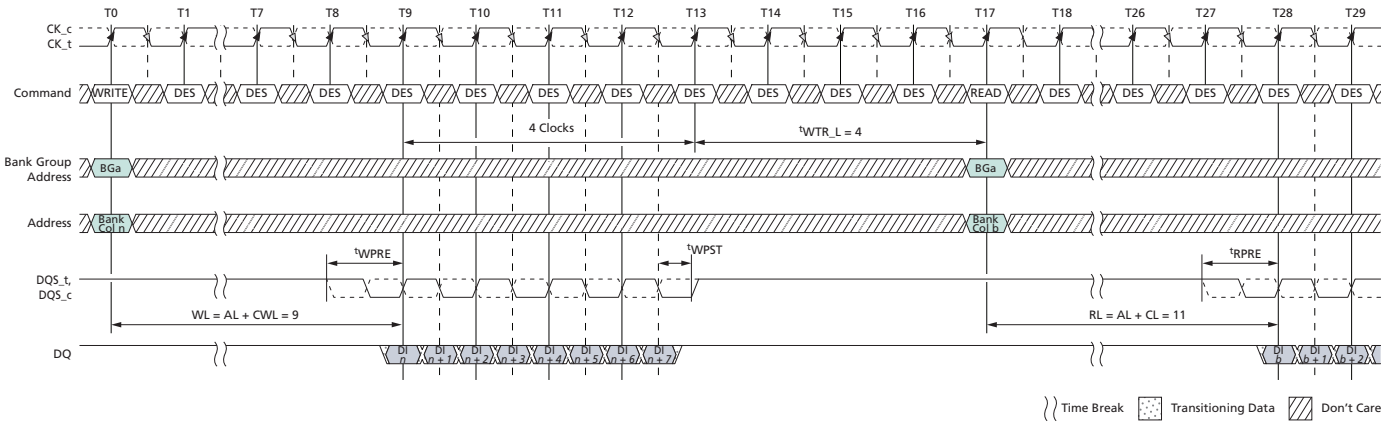

Notes: 1. BL = 8, WL = 9 (CWL = 9, AL = 0), CL = 11, READ preamble = 1^{t}CK, WRITE preamble = 1^{t}CK.
2. DI *b* = data-in from column *b*.
3. DES commands are shown for ease of illustration; other commands may be valid at these times.
4. BL8 setting activated by either MR0[1:0] = 00 or MR0[1:0] = 01 and A12 = 1 during WRITE command at T0 and READ command at T17.
5. CA parity = Disable, CS to CA latency = Disable, Read DBI = Disable, Write DBI = Disable, Write CRC = Disable.
6. The write timing parameter (^{t}WTR_L) is referenced from the first rising clock edge after the last write data shown at T13.

Figure 185: WRITE (BC4) OTF to READ (BC4) OTF with 1^{t}CK Preamble in Different Bank Group

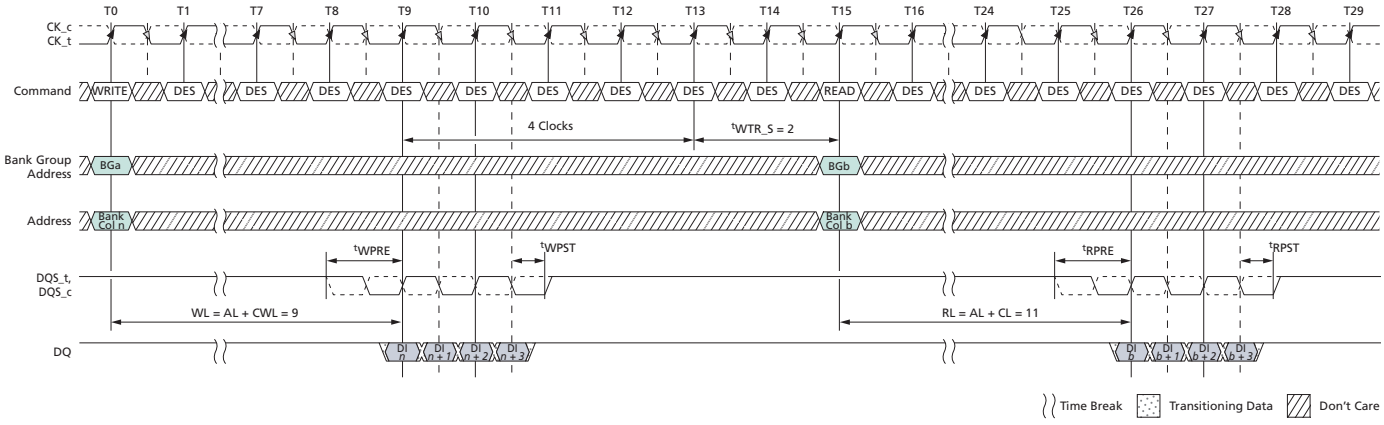

Notes: 1. BC = 4, WL = 9 (CWL = 9, AL = 0), CL = 11, READ preamble = 1^{t}CK, WRITE preamble = 1^{t}CK.
2. DI *b* = data-in from column *b*.
3. DES commands are shown for ease of illustration; other commands may be valid at these times.
4. BC4 setting activated by MR0[1:0] = 01 and A12 = 0 during WRITE command at T0 and READ command at T15.
5. CA parity = Disable, CS to CA latency = Disable, Read DBI = Disable, Write DBI = Disable, Write CRC = Disable.
6. The write timing parameter (^{t}WTR_S) is referenced from the first rising clock edge after the last write data shown at T13.

Micron Technology, Inc. reserves the right to change products or specifications without notice.
© 2018 Micron Technology, Inc. All rights reserved.

Figure 186: WRITE (BC4) OTF to READ (BC4) OTF with 1tCK Preamble in Same Bank Group

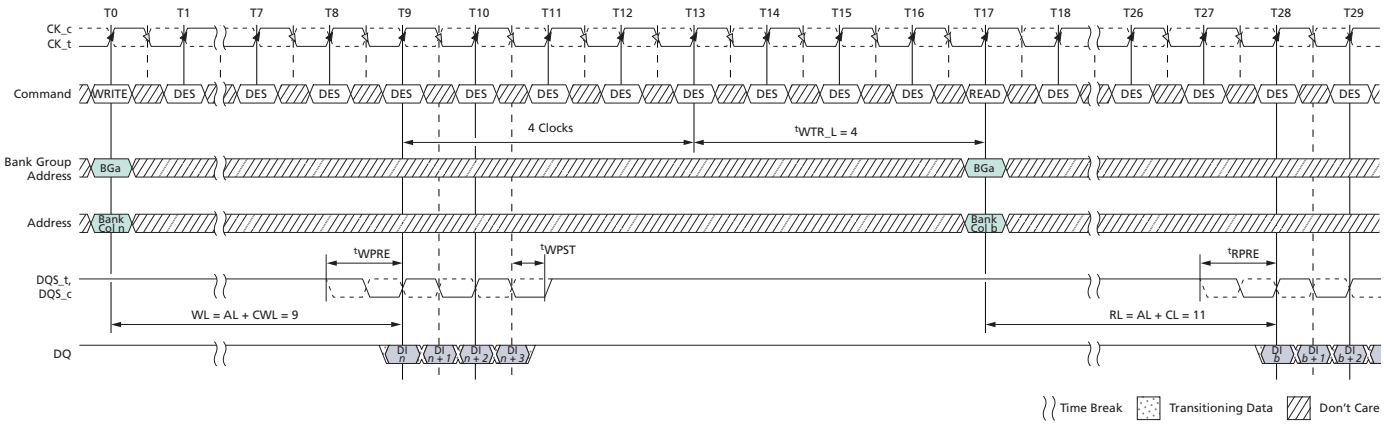

Notes: 1. BC = 4, WL = 9 (CWL = 9, AL = 0), CL = 11, READ preamble = 1tCK, WRITE preamble = 1tCK.
2. DI *b* = data-in from column *b*.
3. DES commands are shown for ease of illustration; other commands may be valid at these times.
4. BC4 setting activated by MR0[1:0] = 01 and A12 = 0 during WRITE command at T0 and READ command at T17.
5. CA parity = Disable, CS to CA latency = Disable, Read DBI = Disable, Write DBI = Disable, Write CRC = Disable.
6. The write timing parameter (tWTR_L) is referenced from the first rising clock edge after the last write data shown at T13.

Figure 187: WRITE (BC4) Fixed to READ (BC4) Fixed with 1 tCK Preamble in Different Bank Group

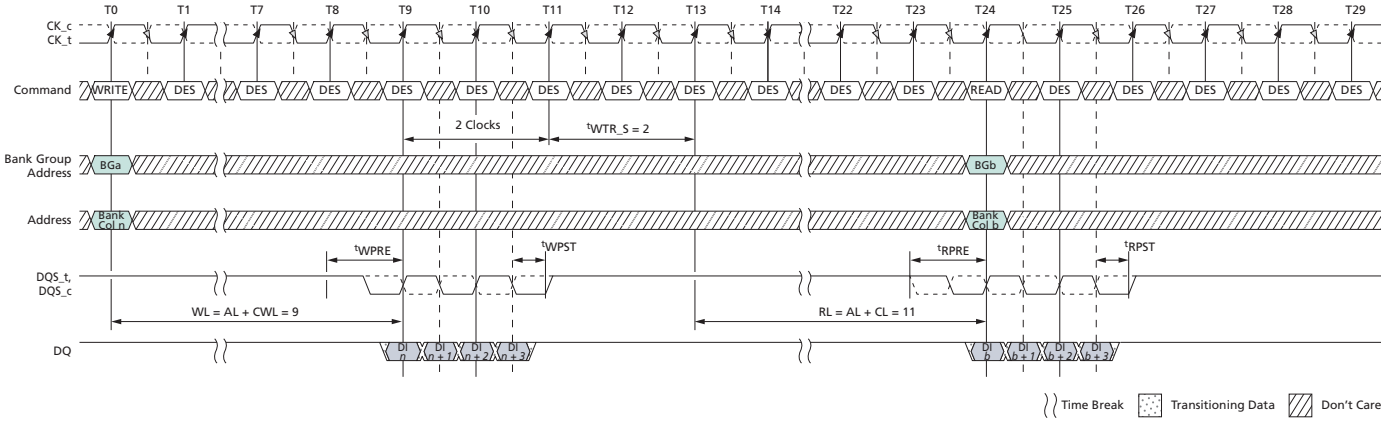

Notes: 1. BC = 4, WL = 9 (CWL = 9, AL = 0), CL = 11, READ preamble = 1 tCK, WRITE preamble = 1tCK.
2. DI *b* = data-in from column *b*.
3. DES commands are shown for ease of illustration; other commands may be valid at these times.
4. BC4 setting activated by MR0[1:0] = 10.
5. CA parity = Disable, CS to CA latency = Disable, Read DBI = Disable, Write DBI = Disable, Write CRC = Disable.
6. The write timing parameter (tWTR_S) is referenced from the first rising clock edge after the last write data shown at T11.

Micron Technology, Inc. reserves the right to change products or specifications without notice.
© 2018 Micron Technology, Inc. All rights reserved.

Figure 188: WRITE (BC4) Fixed to READ (BC4) Fixed with 1tCK Preamble in Same Bank Group

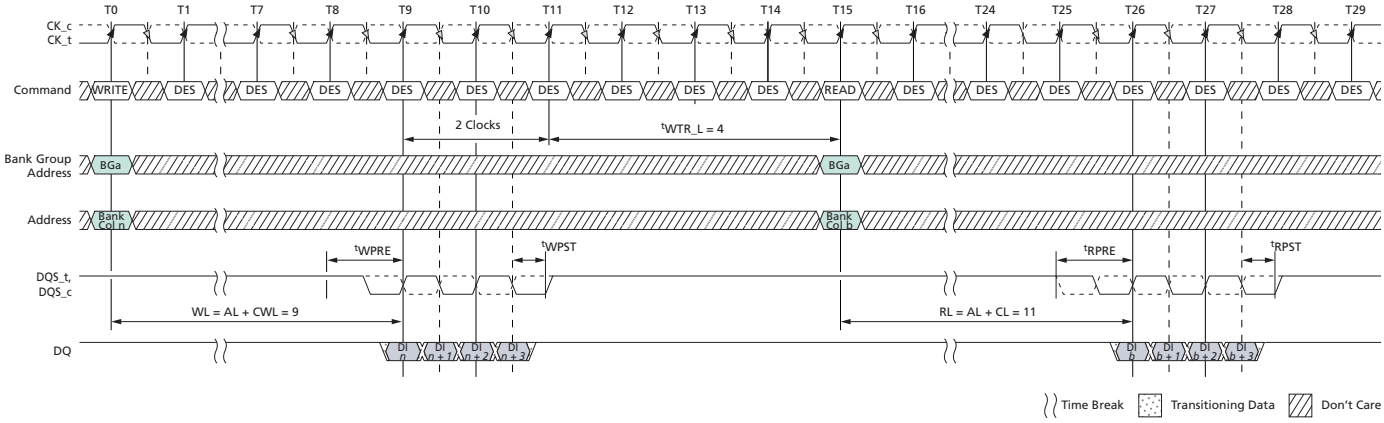

Notes: 1. BC = 4, WL = 9 (CWL = 9, AL = 0), C L = 11, READ preamble = 1tCK, WRITE preamble = 1tCK.
2. DI *b* = data-in from column *b*.
3. DES commands are shown for ease of illustration; other commands may be valid at these times.
4. BC4 setting activated by MR0[1:0] = 10.
5. CA parity = Disable, CS to CA latency = Disable, Read DBI = Disable, Write DBI = Disable, Write CRC = Disable.
6. The write timing parameter (tWTR_L) is referenced from the first rising clock edge after the last write data shown at T11.

WRITE Operation Followed by PRECHARGE Operation

The minimum external WRITE command to PRECHARGE command spacing is equal to WL (AL + CWL) plus either 4tCK (BL8/BC4-OTF) or 2tCK (BC4-fixed) plus tWR. The minimum ACT to PRE timing, tRAS, must be satisfied as well.

Figure 189: WRITE (BL8/BC4-OTF) to PRECHARGE with 1tCK Preamble

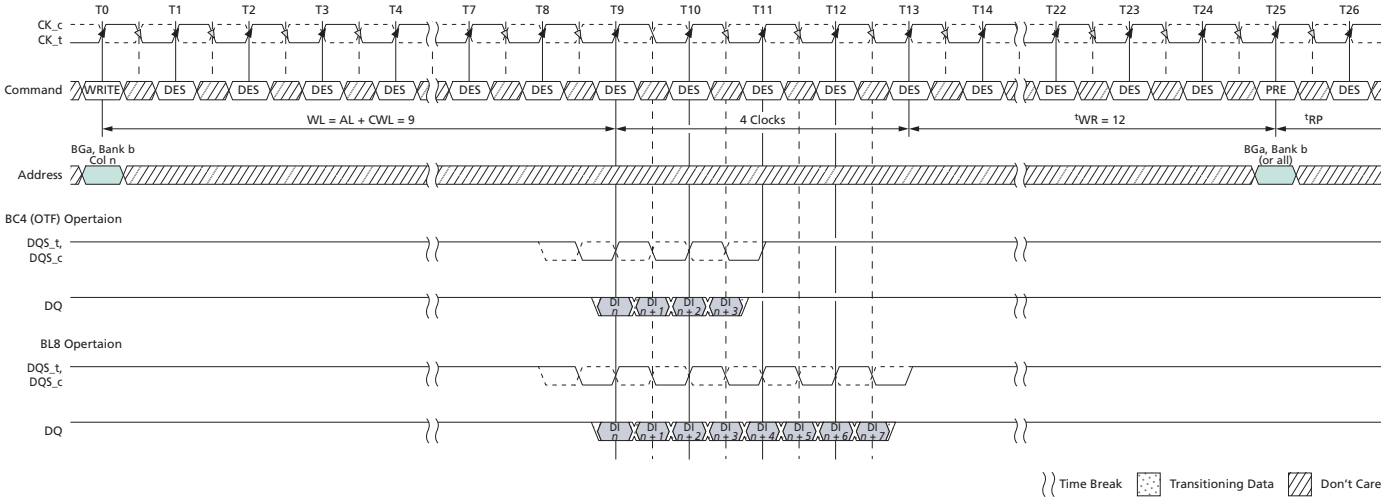

Notes: 1. BL = 8 with BC4-OTF, WL = 9 (CWL = 9, AL = 0), Preamble = 1tCK, tWR = 12.
2. DI *n* = data-in from column *n*.
3. DES commands are shown for ease of illustration; other commands may be valid at these times.
4. BC4 setting activated by MR0[1:0] = 01 and A12 = 0 during WRITE command at T0. BL8 setting activated by MR0[1:0] = 00 or MR0[1:0] = 01 and A12 = 1 during WRITE command at T0.

Micron Technology, Inc. reserves the right to change products or specifications without notice.
© 2018 Micron Technology, Inc. All rights reserved.

5. CA parity = Disable, CS to CA latency = Disable, Read DBI = Disable, CRC = Disable.
6. The write recovery time (^{t}WR) is referenced from the first rising clock edge after the last write data shown at T13. ^{t}WR specifies the last burst WRITE cycle until the PRECHARGE command can be issued to the same bank.

Figure 190: WRITE (BC4-Fixed) to PRECHARGE with 1^{t}CK Preamble

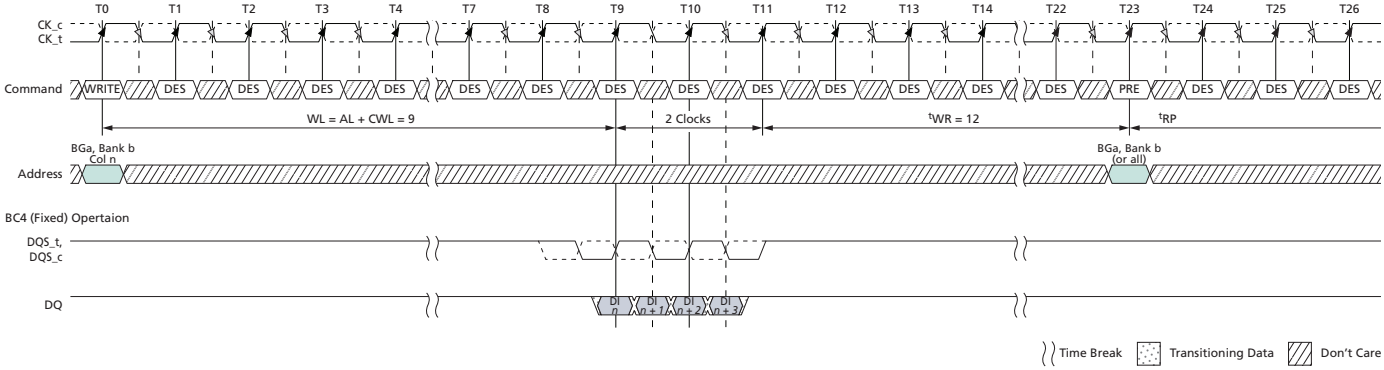

Notes: 1. BC4 = fixed, WL = 9 (CWL = 9, AL = 0), Preamble = 1^{t}CK, ^{t}WR = 12.
2. DI *n* = data-in from column *n*.
3. DES commands are shown for ease of illustration; other commands may be valid at these times.
4. BC4 setting activated by MR0[1:0] = 10.
5. CA parity = Disable, CS to CA latency = Disable, Read DBI = Disable, CRC = Disable.
6. The write recovery time (^{t}WR) is referenced from the first rising clock edge after the last write data shown at T11. ^{t}WR specifies the last burst WRITE cycle until the PRECHARGE command can be issued to the same bank.

Figure 191: WRITE (BL8/BC4-OTF) to Auto PRECHARGE with 1^{t}CK Preamble

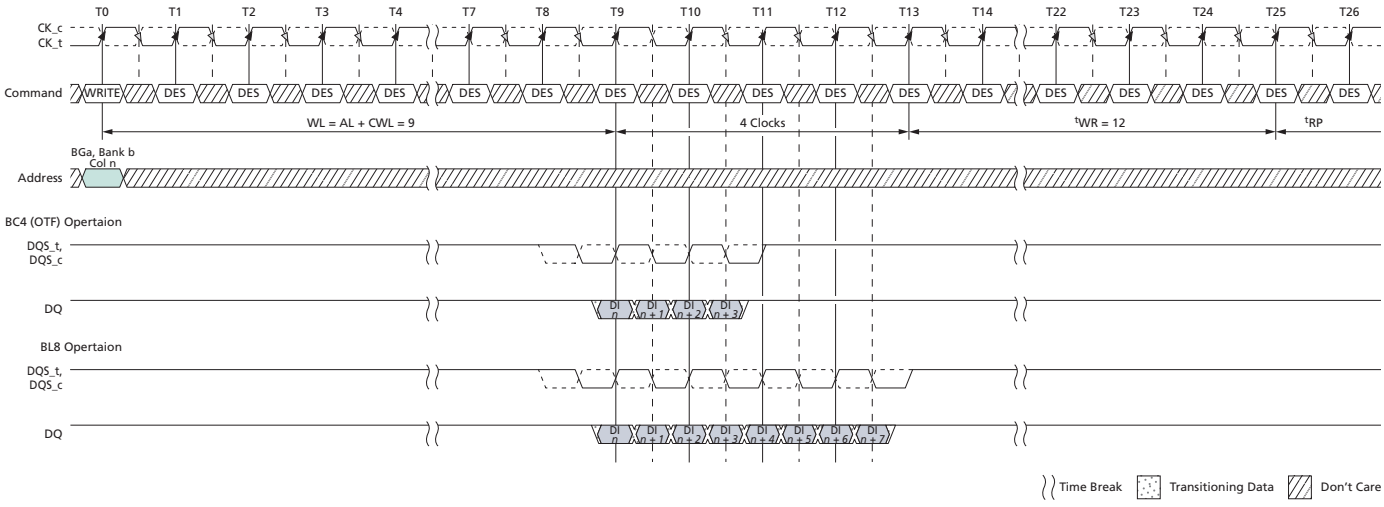

Notes: 1. BL = 8 with BC4-OTF, WL = 9 (CWL = 9, AL = 0), Preamble = 1^{t}CK, ^{t}WR = 12.
2. DI *n* = data-in from column *n*.
3. DES commands are shown for ease of illustration; other commands may be valid at these times.
4. BC4 setting activated by MR0[1:0] = 01 and A12 = 0 during WRITE command at T0.
BL8 setting activated by MR0[1:0] = 00 or MR0[1:0] = 01 and A12 = 1 during WRITE command at T0.
5. CA parity = Disable, CS to CA latency = Disable, Read DBI = Disable, CRC = Disable.
6. The write recovery time (^{t}WR) is referenced from the first rising clock edge after the last write data shown at T13. ^{t}WR specifies the last burst WRITE cycle until the PRECHARGE command can be issued to the same bank.

Micron Technology, Inc. reserves the right to change products or specifications without notice.
© 2018 Micron Technology, Inc. All rights reserved.

Figure 192: WRITE (BC4-Fixed) to Auto PRECHARGE with 1tCK Preamble

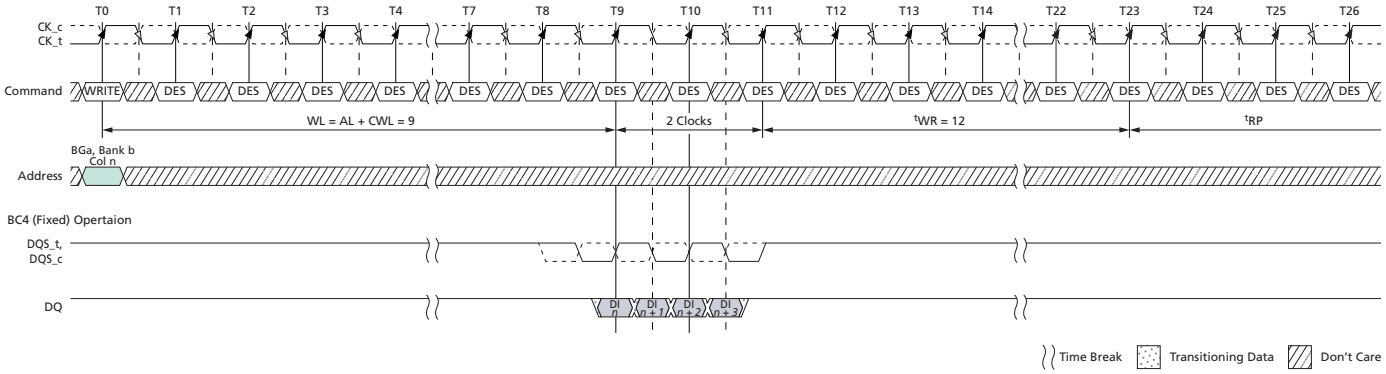

Notes: 1. BC4 = fixed, WL = 9 (CWL = 9, AL = 0), Preamble = 1tCK, tWR = 12.
2. DI *n* = data-in from column *n*.
3. DES commands are shown for ease of illustration; other commands may be valid at these times.
4. BC4 setting activated by MR0[1:0] = 10.
5. CA parity = Disable, CS to CA latency = Disable, Read DBI = Disable, CRC = Disable.
6. The write recovery time (tWR) is referenced from the first rising clock edge after the last write data shown at T11. tWR specifies the last burst WRITE cycle until the PRECHARGE command can be issued to the same bank.

WRITE Operation with WRITE DBI Enabled

Figure 193: WRITE (BL8/BC4-OTF) with 1tCK Preamble and DBI

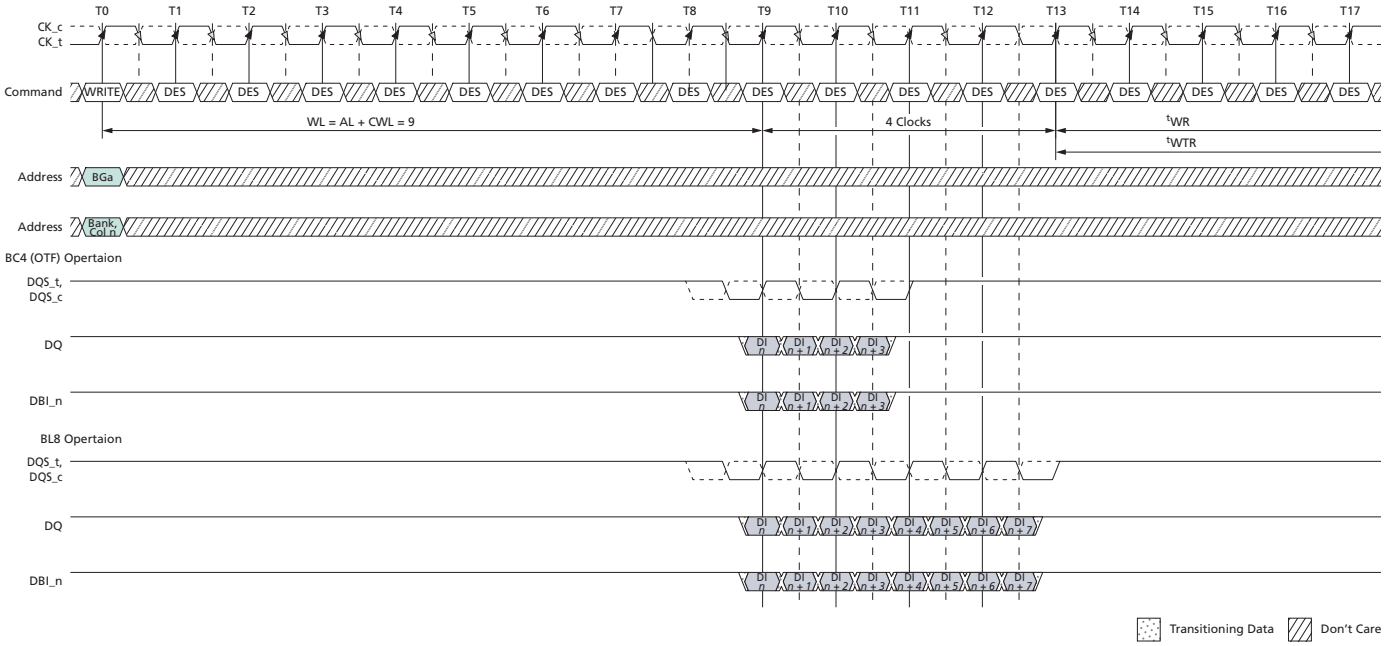

Notes: 1. BL = 8 with BC4-OTF, WL = 9 (CWL = 9, AL = 0), Preamble = 1tCK.
2. DI *n* = data-in from column *n*.
3. DES commands are shown for ease of illustration; other commands may be valid at these times.
4. BC4 setting activated by MR0[1:0] = 01 and A12 = 0 during WRITE command at T0.
BL8 setting activated by MR0[1:0] = 00 or MR0[1:0] = 01 and A12 = 1 during WRITE command at T0.
5. CA parity = Disable, CS to CA latency = Disable, Write DBI = Enabled, Write CRC = Disabled.

Micron Technology, Inc. reserves the right to change products or specifications without notice.
© 2018 Micron Technology, Inc. All rights reserved.

6. The write recovery time (^{t}WR_DBI) is referenced from the first rising clock edge after the last write data shown at T13.

Figure 194: WRITE (BC4-Fixed) with 1^{t}CK Preamble and DBI

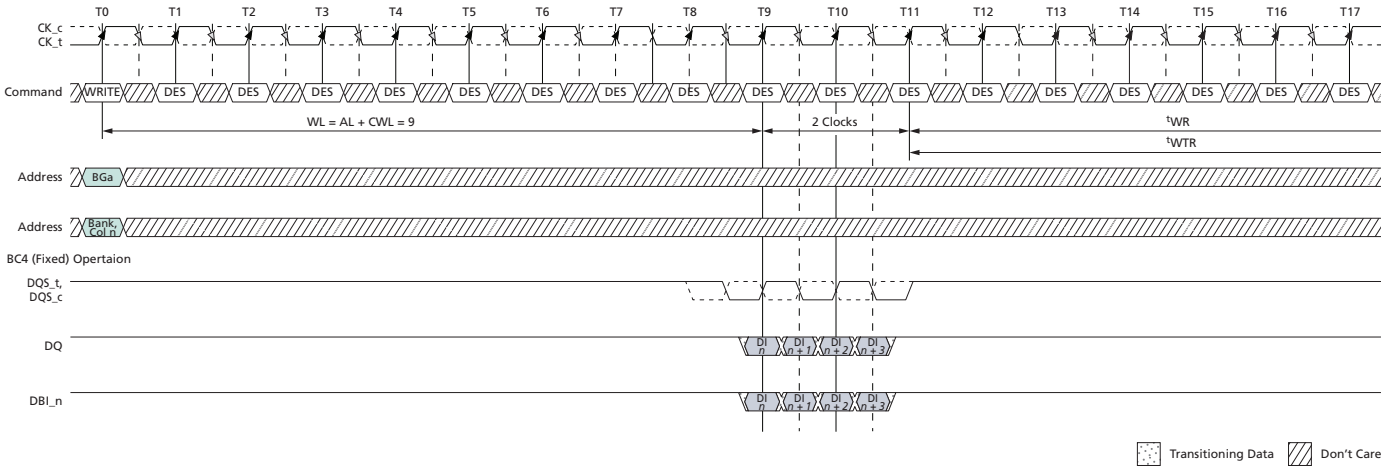

Notes: 1. BC4 = fixed, WL = 9 (CWL = 9, AL = 0), Preamble = 1^{t}CK.
2. DI *n* = data-in from column *n*.
3. DES commands are shown for ease of illustration; other commands may be valid at these times.
4. BC4 setting activated by MR0[1:0] = 10.
5. CA parity = Disable, CS to CA latency = Disable, Write DBI = Enabled, Write CRC = Disabled.

Micron Technology, Inc. reserves the right to change products or specifications without notice.
© 2018 Micron Technology, Inc. All rights reserved.

WRITE Operation with CA Parity Enabled

Figure 195: Consecutive Write (BL8) with 1tCK Preamble and CA Parity in Different Bank Group

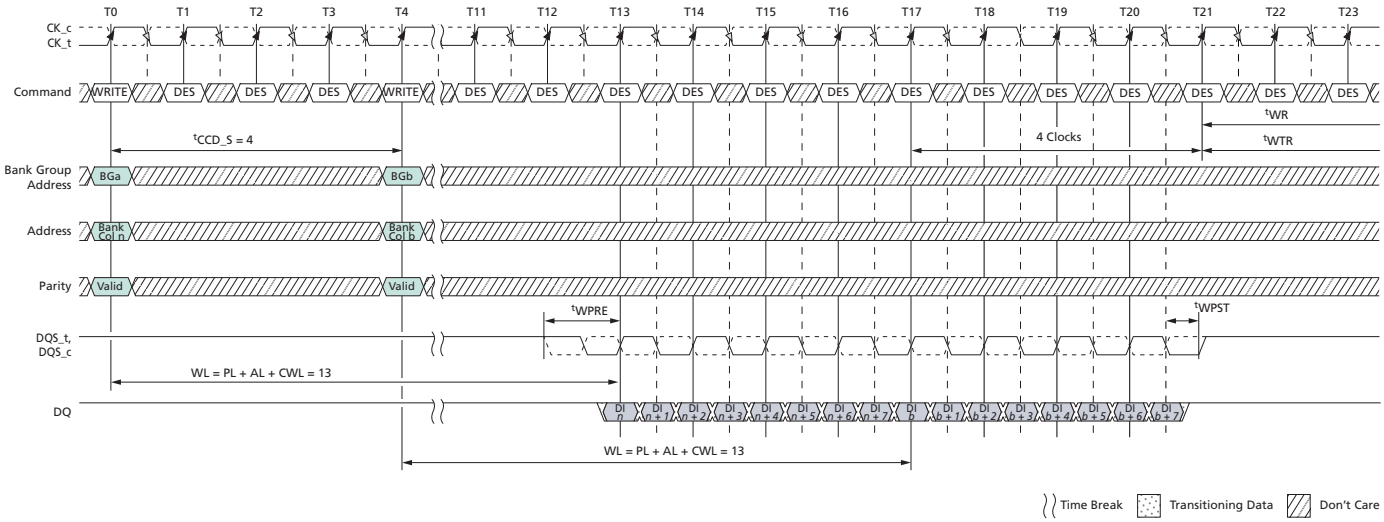

Notes: 1. BL = 8, WL = 9 (CWL = 13, AL = 0), Preamble = 1tCK.
2. DI *n* = data-in from column *n*.
3. DES commands are shown for ease of illustration; other commands may be valid at these times.
4. BL8 setting activated by MR0[1:0] = 00 or MR0[1:0] = 01 and A12 = 1 during WRITE commands at T0 and T4.
5. CA parity = Enable, CS to CA latency = Disable, Write DBI = Enabled, Write CRC = Disable.
6. The write recovery time (tWR) and write timing parameter (tWTR) are referenced from the first rising clock edge after the last write data shown at T21.

Micron Technology, Inc. reserves the right to change products or specifications without notice.
© 2018 Micron Technology, Inc. All rights reserved.

WRITE Operation with Write CRC Enabled

Figure 196: Consecutive WRITE (BL8/BC4-OTF) with 1tCK Preamble and Write CRC in Same or Different Bank Group

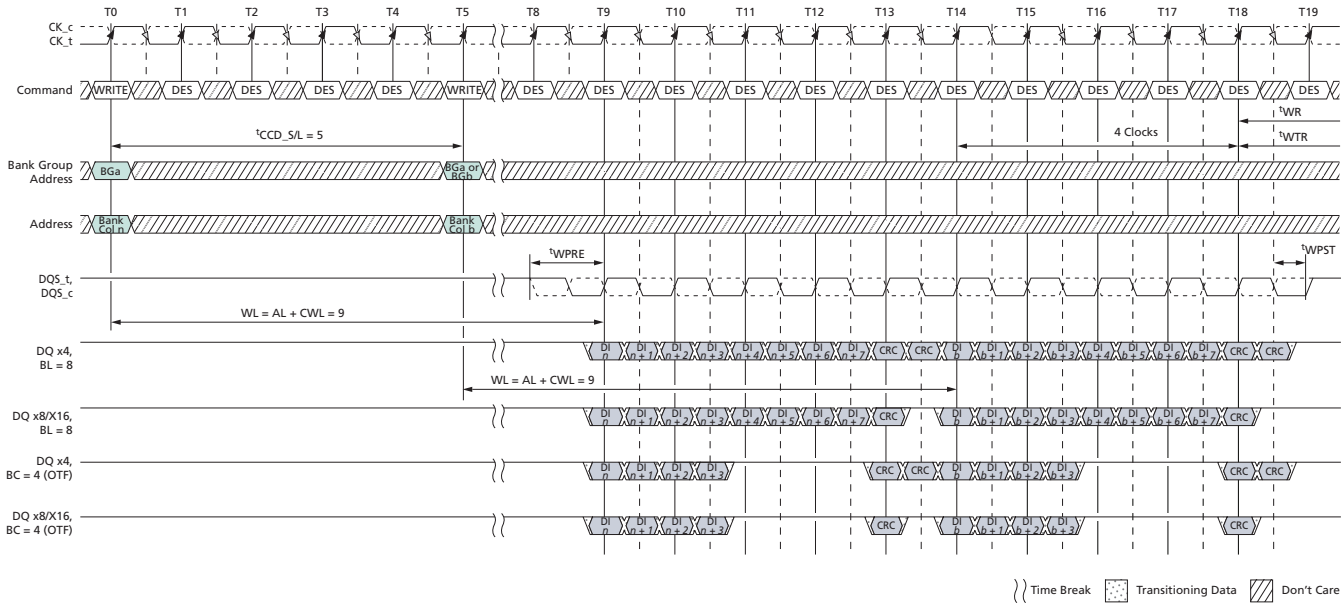

Notes: 1. BL8/BC4-OTF, AL = 0, CWL = 9, Preamble = 1tCK, tCCD_S/L = 5tCK.
2. DI *n* (or *b*) = data-in from column *n* (or column *b*).
3. DES commands are shown for ease of illustration; other commands may be valid at these times.
4. BL8 setting activated by either MR0[1:0] = 00 or MR0[1:0] = 01 and A12 = 1 during WRITE commands at T0 and T5.
5. BC4 setting activated by MR0[1:0] = 01 and A12 = 0 during WRITE commands at T0 and T5.
6. CA parity = Disable, CS to CA latency = Disable, Read DBI = Disable, Write CRC = Enable.
7. The write recovery time (tWR) and write timing parameter (tWTR) are referenced from the first rising clock edge after the last write data shown at T18.

Figure 197: Consecutive WRITE (BC4-Fixed) with 1tCK Preamble and Write CRC in Same or Different Bank Group

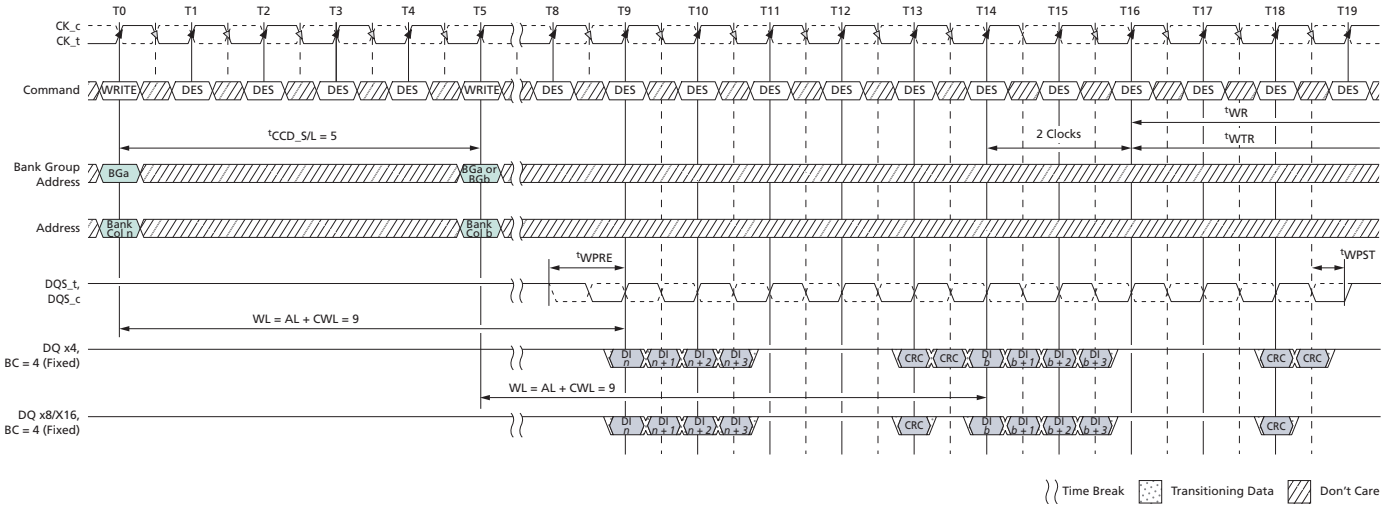

Micron Technology, Inc. reserves the right to change products or specifications without notice.
© 2018 Micron Technology, Inc. All rights reserved.

Notes: 1. BC4-fixed, AL = 0, CWL = 9, Preamble = 1^{t}CK, ^{t}CCD_S/L = 5^{t}CK.
2. DI *n* (or *b*) = data-in from column *n* (or column *b*).
3. DES commands are shown for ease of illustration; other commands may be valid at these times.
4. BC4 setting activated by MR0[1:0] = 10 during WRITE commands at T0 and T5.
5. CA parity = Disable, CS to CA latency = Disable, Read DBI = Disable, Write CRC = Enable, DM = Disable.
6. The write recovery time (^{t}WR) and write timing parameter (^{t}WTR) are referenced from the first rising clock edge after the last write data shown at T16.

Figure 198: Nonconsecutive WRITE (BL8/BC4-OTF) with 1^{t}CK Preamble and Write CRC in Same or Different Bank Group

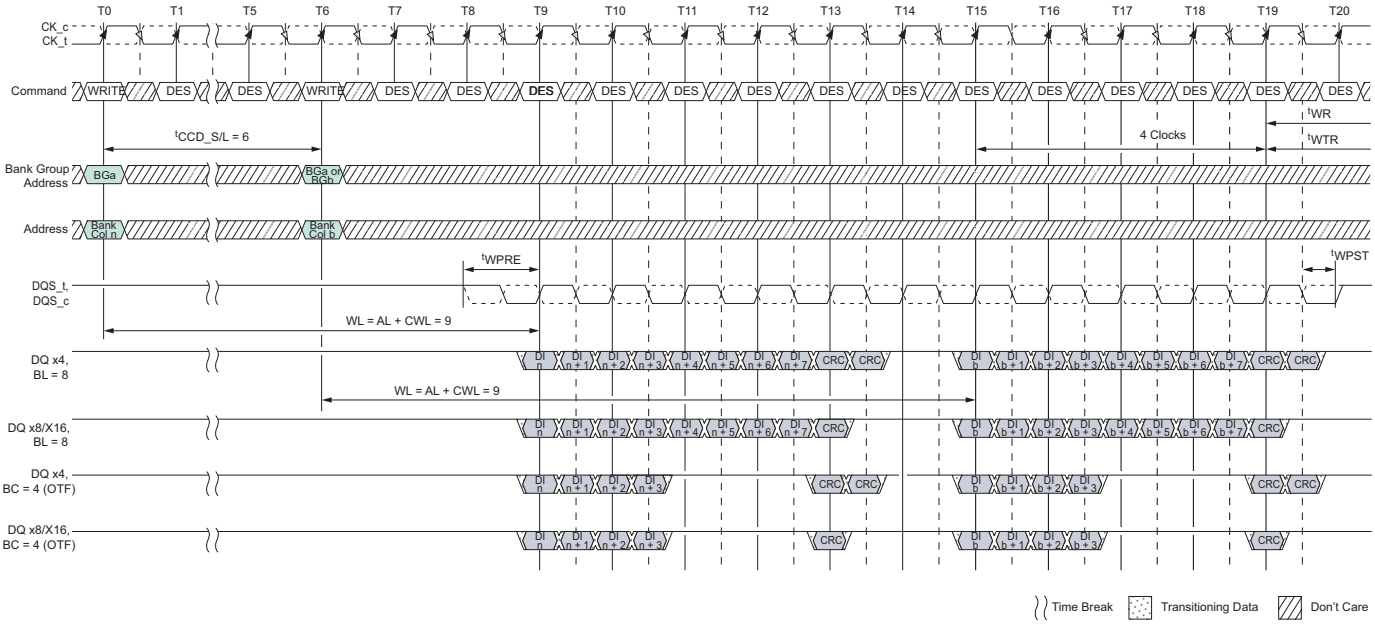

Notes: 1. BL8/BC4-OTF, AL = 0, CWL = 9, Preamble = 1^{t}CK, ^{t}CCD_S/L = 6^{t}CK.
2. DI *n* (or *b*) = data-in from column *n* (or column *b*).
3. DES commands are shown for ease of illustration; other commands may be valid at these times.
4. BL8 setting activated by either MR0[1:0] = 00 or MR0[1:0] = 01 and A12 = 1 during WRITE commands at T0 and T6.
5. BC4 setting activated by MR0[1:0] = 01 and A12 = 0 during WRITE commands at T0 and T6.
6. CA parity = Disable, CS to CA latency = Disable, Read DBI = Disable, Write CRC = Enable, DM = Disable.
7. The write recovery time (^{t}WR) and write timing parameter (^{t}WTR) are referenced from the first rising clock edge after the last write data shown at T19.

Micron Technology, Inc. reserves the right to change products or specifications without notice.
© 2018 Micron Technology, Inc. All rights reserved.

Figure 199: Nonconsecutive WRITE (BL8/BC4-OTF) with 2tCK Preamble and Write CRC in Same or Different Bank Group

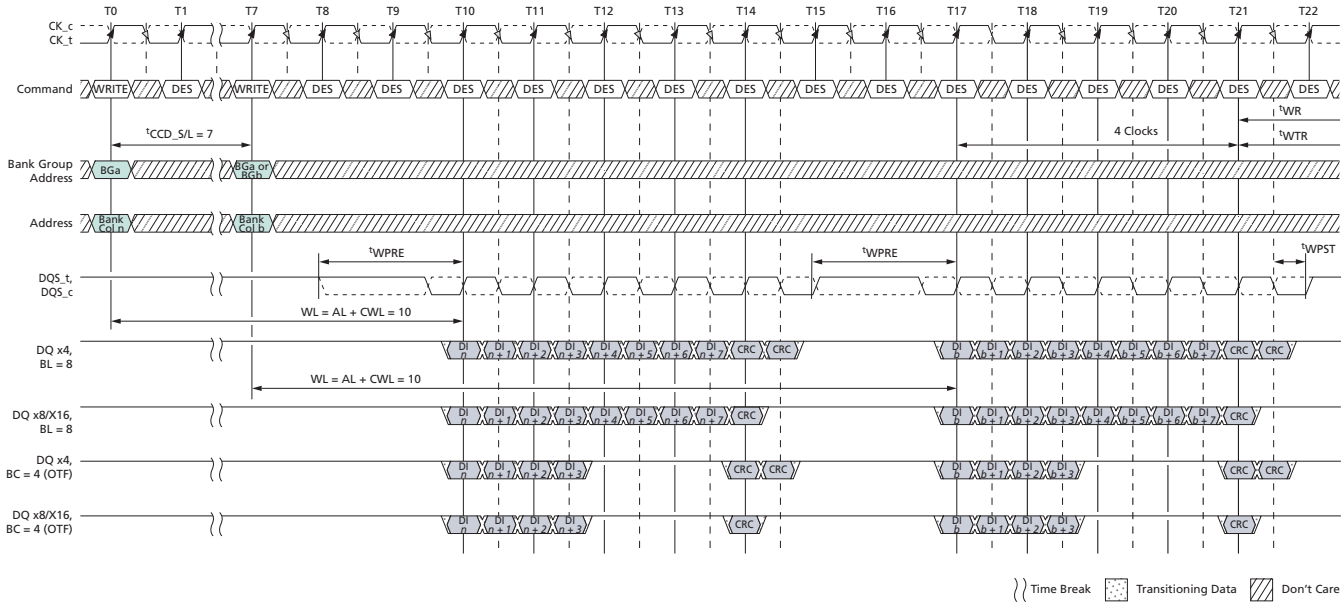

Notes: 1. BL8/BC4-OTF, AL = 0, CWL = 9 + 1 = 10 (see Note 9), Preamble = 2tCK, tCCD_S/L = 7tCK (see Note 7).
2. DI *n* (or *b*) = data-in from column *n* (or column *b*).
3. DES commands are shown for ease of illustration; other commands may be valid at these times.
4. BL8 setting activated by either MR0[1:0] = 00 or MR0[1:0] = 01 and A12 = 1 during WRITE commands at T0 and T7.
5. BC4 setting activated by MR0[1:0] = 01 and A12 = 0 during WRITE commands at T0 and T7.
6. CA parity = Disable, CS to CA latency = Disable, Read DBI = Disable, Write CRC = Enable, DM = Disable.
7. tCCD_S/L = 6tCK is not allowed in 2tCK preamble mode if minimum tCCD_S/L allowed in 1tCK preamble mode would have been 6 clocks.
8. The write recovery time (tWR) and write timing parameter (tWTR) are referenced from the first rising clock edge after the last write data shown at T21.
9. When operating in 2tCK WRITE preamble mode, CWL may need to be programmed to a value at least 1 clock greater than the lowest CWL setting supported in the applicable tCK range. That means CWL = 9 is not allowed when operating in 2tCK WRITE preamble mode.

Micron Technology, Inc. reserves the right to change products or specifications without notice.
© 2018 Micron Technology, Inc. All rights reserved.

Figure 200: WRITE (BL8/BC4-OTF/Fixed) with 1tCK Preamble and Write CRC in Same or Different Bank Group

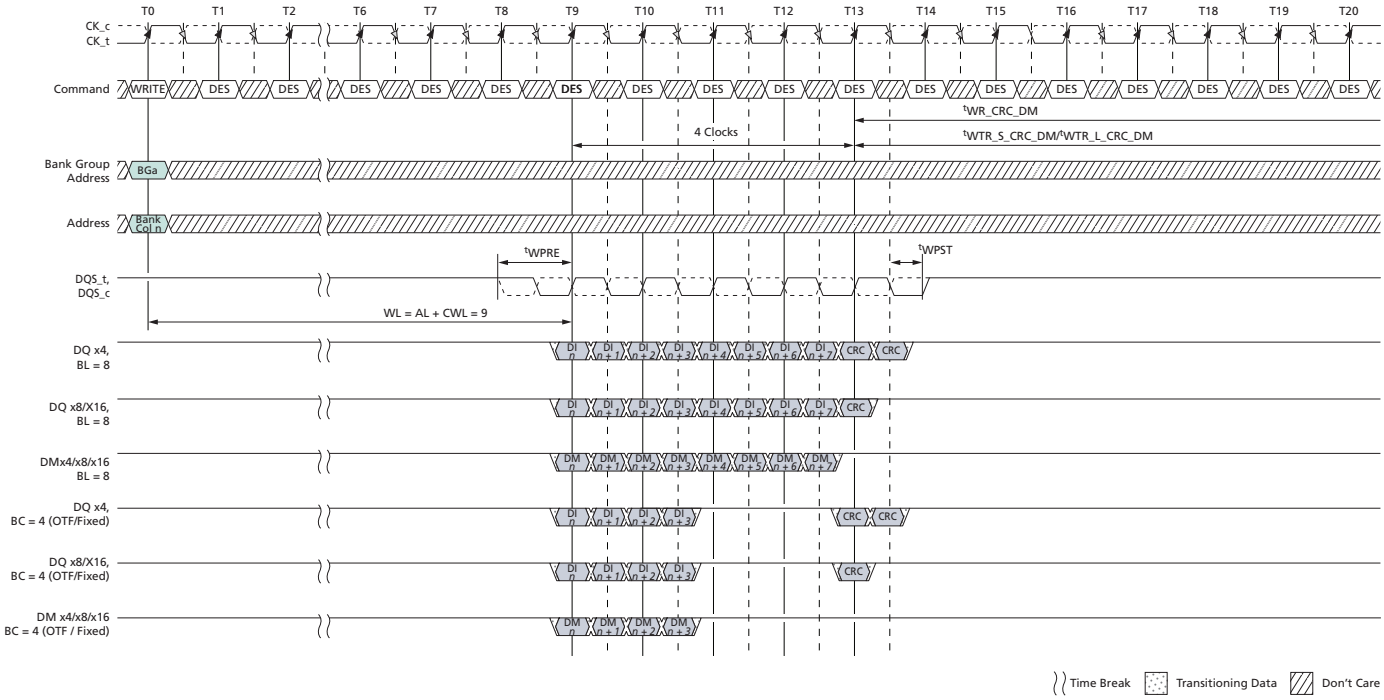

Notes: 1. BL8/BC4, AL = 0, CWL = 9, Preamble = 1tCK.
2. DI *n* (or *b*) = data-in from column *n* (or column *b*).
3. DES commands are shown for ease of illustration; other commands may be valid at these times.
4. BL8 setting activated by either MR0[1:0] = 00 or MR0[1:0] = 01 and A12 = 1 during WRITE command at T0.
5. BC4 setting activated by either MR0[1:0] = 10 or MR0[1:0] = 01 and A12 = 0 during WRITE command at T0.
6. CA parity = Disable, CS to CA latency = Disable, Read DBI = Disable, Write CRC = Enable, DM = Enable.
7. The write recovery time (tWR_CRC_DM) and write timing parameter (tWTR_S_CRC_DM/tWTR_L_CRC_DM) are referenced from the first rising clock edge after the last write data shown at T13.

Micron Technology, Inc. reserves the right to change products or specifications without notice.
© 2018 Micron Technology, Inc. All rights reserved.

Write Timing Violations

Motivation

Generally, if timing parameters are violated, a complete reset/initialization procedure has to be initiated to make sure that the device works properly. However, for certain minor violations, it is desirable that the device is guaranteed not to "hang up" and that errors are limited to that specific operation. A minor violation does not include a major timing violation (for example, when a DQS strobe misses in the ^{t}DQSCK window).

For the following, it will be assumed that there are no timing violations with regard to the WRITE command itself (including ODT, and so on) and that it does satisfy all timing requirements not mentioned below.

Data Setup and Hold Violations

If the data-to-strobe timing requirements (^{t}DS, ^{t}DH) are violated, for any of the strobe edges associated with a WRITE burst, then wrong data might be written to the memory location addressed with this WRITE command.

In the example, the relevant strobe edges for WRITE Burst A are associated with the clock edges: T5, T5.5, T6, T6.5, T7, T7.5, T8, and T8.5.

Subsequent reads from that location might result in unpredictable read data; however, the device will work properly otherwise.

Strobe-to-Strobe and Strobe-to-Clock Violations

If the strobe timing requirements (^{t}DQSH, ^{t}DQSL, ^{t}WPRE, ^{t}WPST) or the strobe to clock timing requirements (^{t}DSS, ^{t}DSH, ^{t}DQSS) are violated, for any of the strobe edges associated with a WRITE burst, then wrong data might be written to the memory location addressed with the offending WRITE command. Subsequent reads from that location might result in unpredictable read data; however, the device will work properly otherwise with the following constraints:

- Both write CRC and data burst OTF are disabled; timing specifications other than ^{t}DQSH, ^{t}DQSL, ^{t}WPRE, ^{t}WPST, ^{t}DSS, ^{t}DSH, ^{t}DQSS are not violated.
- The offending write strobe (and preamble) arrive no earlier or later than six DQS transition edges from the WRITE latency position.
- A READ command following an offending WRITE command from any open bank is allowed.
- One or more subsequent WR or a subsequent WRA (to same bank as offending WR) may be issued ^{t}CCD_L later, but incorrect data could be written. Subsequent WR and WRA can be either offending or non-offending writes. Reads from these writes may provide incorrect data.
- One or more subsequent WR or a subsequent WRA (to a different bank group) may be issued ^{t}CCD_S later, but incorrect data could be written. Subsequent WR and WRA can be either offending or non-offending writes. Reads from these writes may provide incorrect data.
- After one or more precharge commands (PRE or PREA) are issued to the device after an offending WRITE command and all banks are in precharged state (idle state), a subsequent, non-offending WR or WRA to any open bank will be able to write correct data.

Micron Technology, Inc. reserves the right to change products or specifications without notice.
© 2018 Micron Technology, Inc. All rights reserved.

ZQ CALIBRATION Commands

A ZQ CALIBRATION command is used to calibrate DRAM R_{ON} and ODT values. The device needs a longer time to calibrate the output driver and on-die termination circuits at initialization and a relatively smaller time to perform periodic calibrations.

The ZQCL command is used to perform the initial calibration during the power-up initialization sequence. This command may be issued at any time by the controller depending on the system environment. The ZQCL command triggers the calibration engine inside the DRAM and, after calibration is achieved, the calibrated values are transferred from the calibration engine to DRAM I/O, which is reflected as an updated output driver and ODT values.

The first ZQCL command issued after reset is allowed a timing period of ^{t}ZQinit to perform the full calibration and the transfer of values. All other ZQCL commands except the first ZQCL command issued after reset are allowed a timing period of ^{t}ZQoper.

The ZQCS command is used to perform periodic calibrations to account for voltage and temperature variations. A shorter timing window is provided to perform the calibration and transfer of values as defined by timing parameter ^{t}ZQCS. One ZQCS command can effectively correct a minimum of 0.5% (ZQ correction) of R_{ON} and R_{TT} impedance error within 64 *n*CK for all speed bins assuming the maximum sensitivities specified in the Output Driver and ODT Voltage and Temperature Sensitivity tables. The appropriate interval between ZQCS commands can be determined from these tables and other application-specific parameters. One method for calculating the interval between ZQCS commands, given the temperature (T_{drift_rate}) and voltage (V_{drift_rate}) drift rates that the device is subjected to in the application, is illustrated. The interval could be defined by the following formula:

$$\frac{ZQ_{correction}}{(T_{sense} \times T_{drift_rate}) + (V_{sense} \times T_{drift_rate})}$$

Where T_{sense} = MAX($dR_{TT}dT$, $dR_{ON}dTM$) and V_{sense} = MAX($dR_{TT}dV$, $dR_{ON}dVM$) define the temperature and voltage sensitivities.

For example, if T_{sens} = 1.5%/°C, V_{sens} = 0.15%/mV, $T_{driftrate}$ = 1 °C/sec and $V_{driftrate}$ = 15 mV/sec, then the interval between ZQCS commands is calculated as:

$$\frac{0.5}{(1.5 \times 1) + (0.15 \times 15)} = 0.133 \approx 128\text{ms}$$

No other activities should be performed on the DRAM channel by the controller for the duration of ^{t}ZQinit, ^{t}ZQoper, or ^{t}ZQCS. The quiet time on the DRAM channel allows accurate calibration of output driver and on-die termination values. After DRAM calibration is achieved, the device should disable the ZQ current consumption path to reduce power.

All banks must be precharged and ^{t}RP met before ZQCL or ZQCS commands are issued by the controller.

ZQ CALIBRATION commands can also be issued in parallel to DLL lock time when coming out of self refresh. Upon self refresh exit, the device will not perform an I/O calibration without an explicit ZQ CALIBRATION command. The earliest possible time for a ZQ CALIBRATION command (short or long) after self refresh exit is ^{t}XS, ^{t}XS_Abort, or ^{t}XS_FAST depending on operation mode.

In systems that share the ZQ resistor between devices, the controller must not allow any overlap of ^{t}ZQoper, ^{t}ZQinit, or ^{t}ZQCS between the devices.

Micron Technology, Inc. reserves the right to change products or specifications without notice.
© 2018 Micron Technology, Inc. All rights reserved.

Figure 201: ZQ Calibration Timing

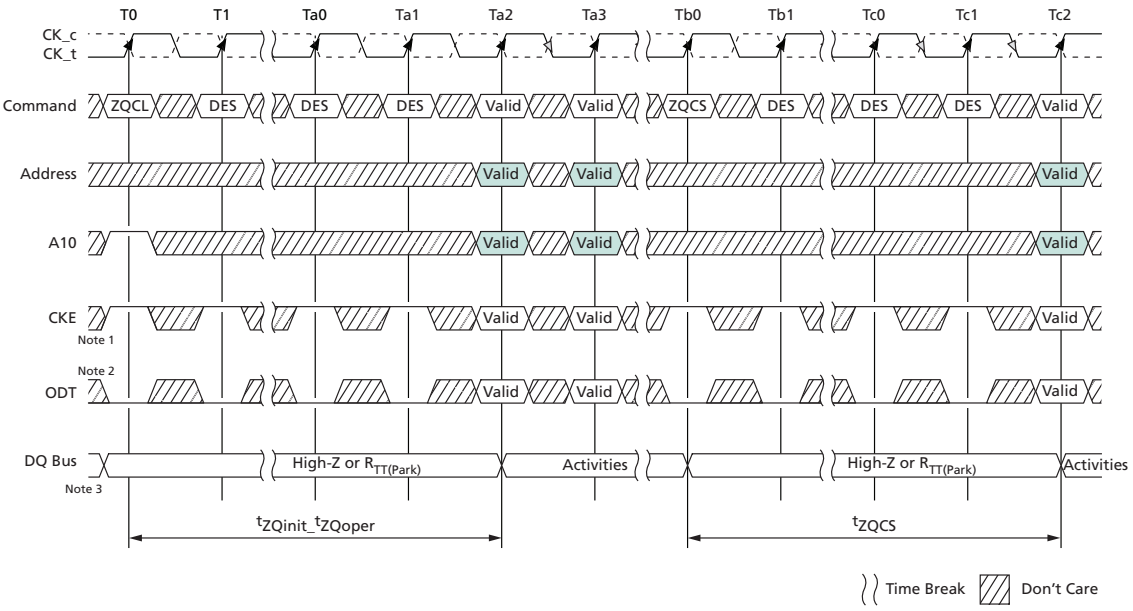

Notes: 1. CKE must be continuously registered HIGH during the calibration procedure.
2. During ZQ calibration, the ODT signal must be held LOW and DRAM continues to provide RTT_PARK.
3. All devices connected to the DQ bus should be High-Z during the calibration procedure.

Micron Technology, Inc. reserves the right to change products or specifications without notice.
© 2018 Micron Technology, Inc. All rights reserved.

On-Die Termination

The on-die termination (ODT) feature enables the device to change termination resistance for each DQ, DQS, and DM_n/DBI_n signal for x4 and x8 configurations (and TDQS for the x8 configuration when enabled via A11 = 1 in MR1) via the ODT control pin, WRITE command, or default parking value with MR setting. For the x16 configuration, ODT is applied to each UDQ, LDQ, UDQS, LDQS, UDM_n/UDBI_n, and LDM_n/LDBI_n signal. The ODT feature is designed to improve the signal integrity of the memory channel by allowing the DRAM controller to independently change termination resistance for any or all DRAM devices. If DBI read mode is enabled while the DRAM is in standby, either DM mode or DBI write mode must also be enabled if $R_{TT(NOM)}$ or $R_{TT(Park)}$ is desired. More details about ODT control modes and ODT timing modes can be found further along in this document.

The ODT feature is turned off and not supported in self refresh mode.

Figure 202: Functional Representation of ODT

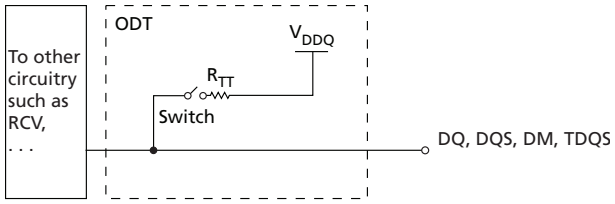

The switch is enabled by the internal ODT control logic, which uses the external ODT pin and other control information. The value of R_{TT} is determined by the settings of mode register bits (see Mode Register). The ODT pin will be ignored if the mode register MR1 is programmed to disable $R_{TT(NOM)}$ [MR1[10,9,8] = 0,0,0] and in self refresh mode.

ODT Mode Register and ODT State Table

The ODT mode of the DDR4 device has four states: data termination disable, $R_{TT(NOM)}$, $R_{TT(WR)}$, and $R_{TT(Park)}$. The ODT mode is enabled if any of MR1[10:8] ($R_{TT(NOM)}$), MR2[11:9] ($R_{TT(WR)}$), or MR5[8:6] ($R_{TT(Park)}$) are non-zero. When enabled, the value of R_{TT} is determined by the settings of these bits.

R_{TT} control of each R_{TT} condition is possible with a WR or RD command and ODT pin.

- $R_{TT(WR)}$: The DRAM (rank) that is being written to provide termination regardless of ODT pin status (either HIGH or LOW).
- $R_{TT(NOM)}$: DRAM turns ON $R_{TT(NOM)}$ if it sees ODT asserted HIGH (except when ODT is disabled by MR1).
- $R_{TT(Park)}$: Default parked value set via MR5 to be enabled and $R_{TT(NOM)}$ is not turned on.
- The Termination State Table that follows shows various interactions.

The R_{TT} values have the following priority:

- Data termination disable
- $R_{TT(WR)}$
- $R_{TT(NOM)}$
- $R_{TT(Park)}$

Micron Technology, Inc. reserves the right to change products or specifications without notice.
© 2018 Micron Technology, Inc. All rights reserved.

Table 72: Termination State Table

Case	$R_{TT(Park)}$	$R_{TT(NOM)}$ [1]	$R_{TT(WR)}$ [2]	ODT Pin	ODT READS[3]	ODT Standby[7]	ODT WRITES
A[4]	Disabled	Disabled	Disabled	Don't Care	Off (High-Z)	Off (High-Z)	Off (High-Z)
			Enabled	Don't Care	Off (High-Z)	Off (High-Z)	$R_{TT(WR)}$
B[5]	Enabled	Disabled	Disabled	Don't Care	Off (High-Z)	$R_{TT(Park)}$	$R_{TT(Park)}$
			Enabled	Don't Care	Off (High-Z)	$R_{TT(Park)}$	$R_{TT(WR)}$
C[6]	Disabled	Enabled	Disabled	Low	Off (High-Z)	Off (High-Z)	Off (High-Z)
				High	Off (High-Z)	$R_{TT(NOM)}$	$R_{TT(NOM)}$
			Enabled	Low	Off (High-Z)	Off (High-Z)	$R_{TT(WR)}$
				High	Off (High-Z)	$R_{TT(NOM)}$	$R_{TT(WR)}$
D[6]	Enabled	Enabled	Disabled	Low	Off (High-Z)	$R_{TT(Park)}$	$R_{TT(Park)}$
				High	Off (High-Z)	$R_{TT(NOM)}$	$R_{TT(NOM)}$
			Enabled	Low	Off (High-Z)	$R_{TT(Park)}$	$R_{TT(WR)}$
				High	Off (High-Z)	$R_{TT(NOM)}$	$R_{TT(WR)}$

Notes: 1. If $R_{TT(NOM)}$ MR is disabled, power to the ODT receiver will be turned off to save power.
2. If $R_{TT(WR)}$ is enabled, $R_{TT(WR)}$ will be activated by a WRITE command for a defined period time independent of the ODT pin and MR setting of $R_{TT(Park)}$/$R_{TT(NOM)}$. This is described in the Dynamic ODT section.
3. When a READ command is executed, the DRAM termination state will be High-Z for a defined period independent of the ODT pin and MR setting of $R_{TT(Park)}$/$R_{TT(NOM)}$. This is described in the ODT During Read section.
4. Case A is generally best for single-rank memories.
5. Case B is generally best for dual-rank, single-slotted memories.
6. Case C and Case D are generally best for multi-slotted memories.
7. The ODT feature is turned off and not supported in self refresh mode.

ODT Read Disable State Table

Upon receiving a READ command, the DRAM driving data disables ODT after RL - (2 or 3) clock cycles, where 2 = 1^{t}CK preamble mode and 3 = 2^{t}CK preamble mode. ODT stays off for a duration of BL/2 + (2 or 3) + (0 or 1) clock cycles, where 2 = 1^{t}CK preamble mode, 3 = 2^{t}CK preamble mode, 0 = CRC disabled, and 1 = CRC enabled.

Table 73: Read Termination Disable Window

Preamble	CRC	Start ODT Disable After Read	Duration of ODT Disable
1^{t}CK	Disabled	RL - 2	BL/2 + 2
	Enabled	RL - 2	BL/2 + 3
2^{t}CK	Disabled	RL - 3	BL/2 + 3
	Enabled	RL - 3	BL/2 + 4

Micron Technology, Inc. reserves the right to change products or specifications without notice.
© 2018 Micron Technology, Inc. All rights reserved.

Synchronous ODT Mode

Synchronous ODT mode is selected whenever the DLL is turned on and locked. Based on the power-down definition, these modes include the following:

- Any bank active with CKE HIGH
- Refresh with CKE HIGH
- Idle mode with CKE HIGH
- Active power-down mode
- Precharge power-down mode

In synchronous ODT mode, $R_{TT(NOM)}$ will be turned on DODTLon clock cycles after ODT is sampled HIGH by a rising clock edge and turned off DODTLoff clock cycles after ODT is registered LOW by a rising clock edge. The ODT latency is determined by the programmed values for: CAS WRITE latency (CWL), additive latency (AL), and parity latency (PL), as well as the programmed state of the preamble.

ODT Latency and Posted ODT

The ODT latencies for synchronous ODT mode are summarized in the table below. For details, refer to the latency definitions.

Table 74: ODT Latency at DDR4-1600/-1866/-2133/-2400/-2666/-3200

Applicable when write CRC is disabled

Symbol	Parameter	1^{t}CK Preamble	2^{t}CK Preamble	Unit
DODTLon	Direct ODT turn-on latency	CWL + AL + PL - 2	CWL + AL + PL - 3	^{t}CK
DODTLoff	Direct ODT turn-off latency	CWL + AL + PL - 2	CWL + AL + PL - 3	
RODTLoff	READ command to internal ODT turn-off latency	CL + AL + PL - 2	CL + AL + PL - 3	
RODTLon4	READ command to $R_{TT(Park)}$ turn-on latency in BC4-fixed	RODTLoff + 4	RODTLoff + 5	
RODTLon8	READ command to $R_{TT(Park)}$ turn-on latency in BL8/BC4-OTF	RODTLoff + 6	RODTLoff + 7	
ODTH4	ODT Assertion time, BC4 mode	4	5	
ODTH8	ODT Assertion time, BL8 mode	6	7	

Timing Parameters

In synchronous ODT mode, the following parameters apply:

- DODTLon, DODTLoff, RODTLoff, RODTLon4, RODTLon8, and ^{t}ADC (MIN)/(MAX).
- ^{t}ADC (MIN) and ^{t}ADC (MAX) are minimum and maximum R_{TT} change timing skew between different termination values. These timing parameters apply to both the synchronous ODT mode and the data termination disable mode.

When ODT is asserted, it must remain HIGH until minimum ODTH4 (BC = 4) or ODTH8 (BL = 8) is satisfied. If write CRC mode or 2^{t}CK preamble mode is enabled, ODTH should be adjusted to account for it. ODTH*x* is measured from ODT first registered HIGH to ODT first registered LOW or from the registration of a WRITE command.

Micron Technology, Inc. reserves the right to change products or specifications without notice.
© 2018 Micron Technology, Inc. All rights reserved.

Figure 203: Synchronous ODT Timing with BL8

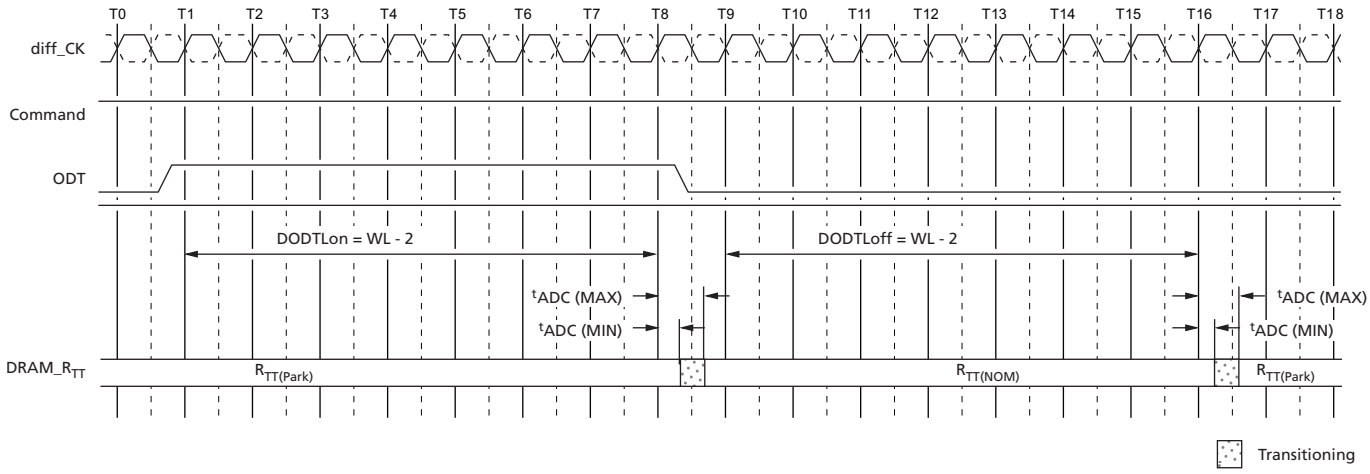

Notes: 1. Example for CWL = 9, AL = 0, PL = 0; DODTLon = AL + PL + CWL - 2 = 7; DODTLoff = AL + PL + CWL - 2 = 7.
2. ODT must be held HIGH for at least ODTH8 after assertion (T1).

Figure 204: Synchronous ODT with BC4

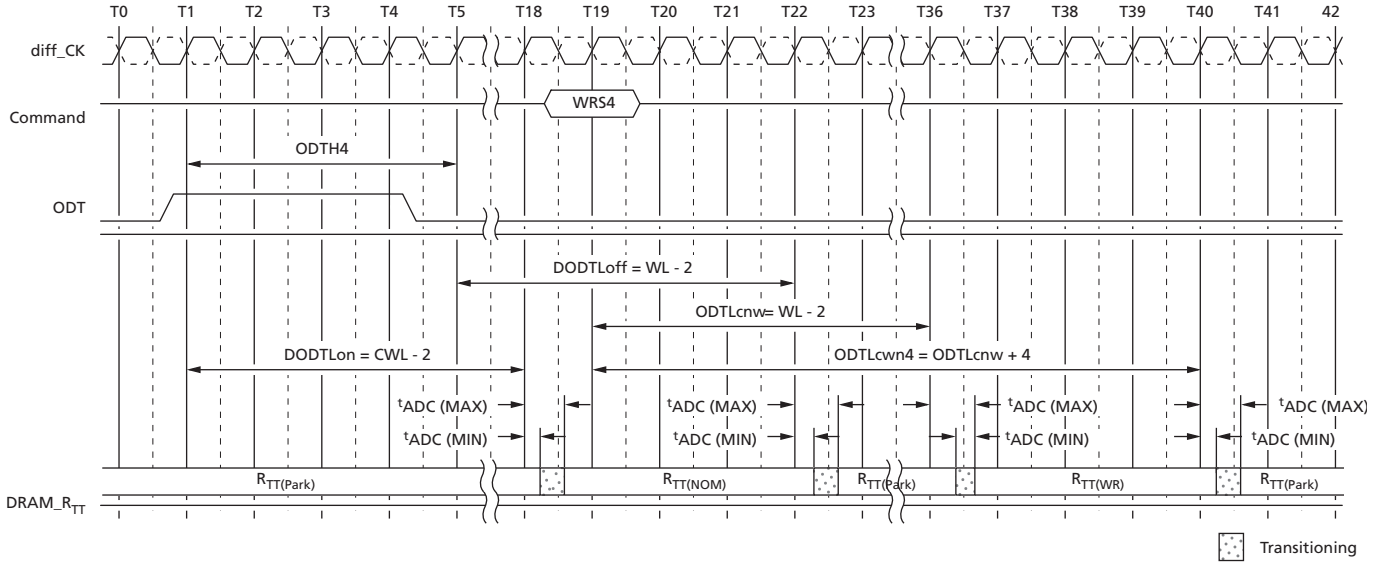

Notes: 1. Example for CWL = 9, AL = 10, PL = 0; DODTLon/off = AL + PL+ CWL - 2 = 17; ODTcnw = AL + PL+ CWL - 2 = 17.
2. ODT must be held HIGH for at least ODTH4 after assertion (T1).

Micron Technology, Inc. reserves the right to change products or specifications without notice.
© 2018 Micron Technology, Inc. All rights reserved.

ODT During Reads

Because the DRAM cannot terminate with R_{TT} and drive with R_{ON} at the same time, R_{TT} may nominally not be enabled until the end of the postamble as shown in the example below. At cycle T26 the device turns on the termination when it stops driving, which is determined by ^{t}HZ. If the DRAM stops driving early (that is, ^{t}HZ is early), then^{t}ADC (MIN) timing may apply. If the DRAM stops driving late (that is, ^{t}HZ is late), then the DRAM complies with ^{t}ADC (MAX) timing.

Using CL = 11 as an example for the figure below: PL = 0, AL = CL - 1 = 10, RL = PL + AL + CL = 21, CWL= 9; RODTLoff = RL - 2 = 19, DODTLon = PL + AL + CWL - 2 = 17, 1^{t}CK preamble.

Figure 205: ODT During Reads

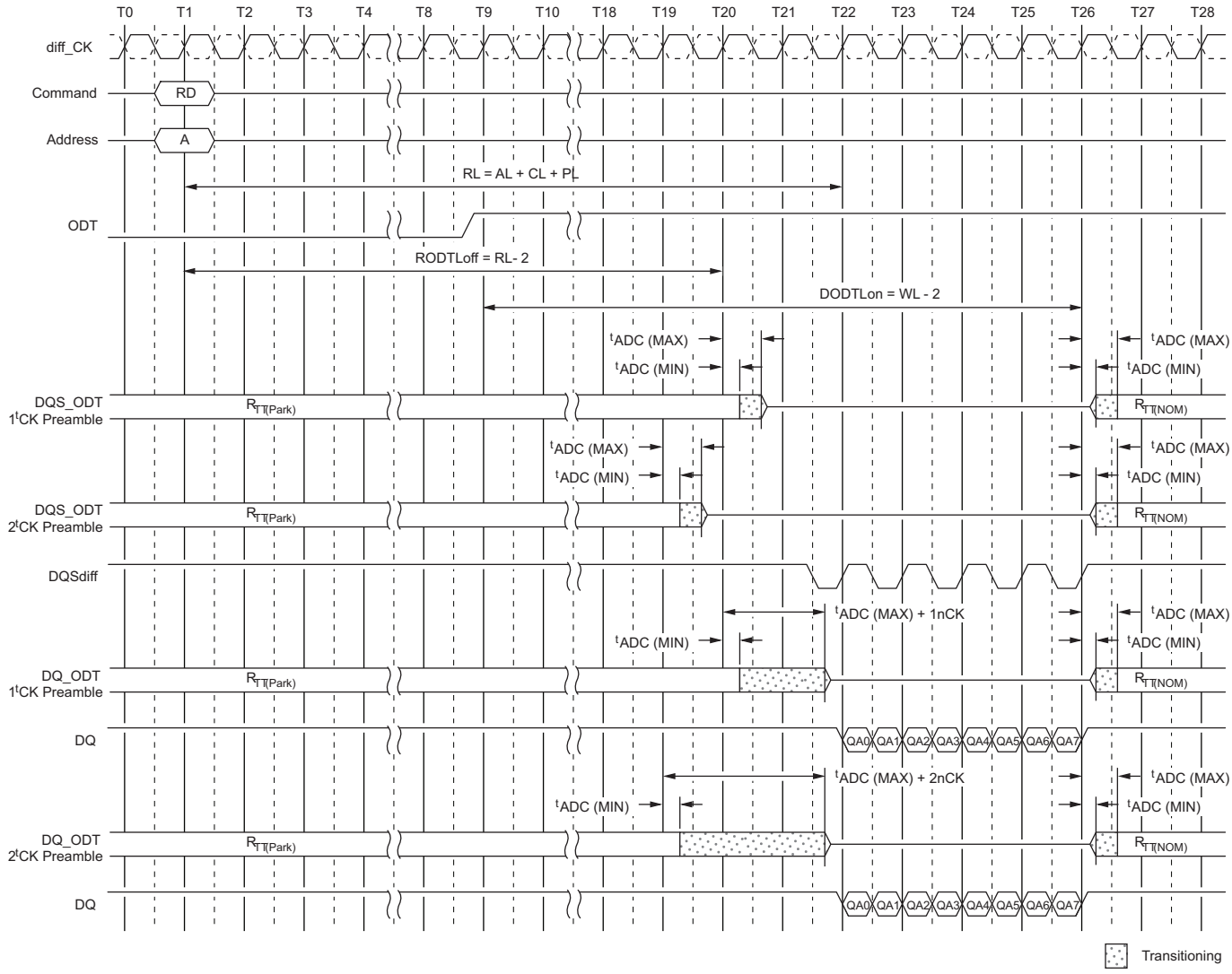

Micron Technology, Inc. reserves the right to change products or specifications without notice.
© 2018 Micron Technology, Inc. All rights reserved.

Dynamic ODT

In certain application cases and to further enhance signal integrity on the data bus, it is desirable that the termination strength of the device can be changed without issuing an MRS command. This requirement is supported by the dynamic ODT feature.

Functional Description

Dynamic ODT mode is enabled if bit A9 or A10 of MR2 is set to 1.

- Three R_{TT}values are available: $R_{TT(NOM)}$, $R_{TT(WR)}$, and $R_{TT(Park)}$.
  - The value for $R_{TT(NOM)}$ is preselected via bits MR1[10:8].
  - The value for $R_{TT(WR)}$ is preselected via bits MR2[11:9].
  - The value for $R_{TT(Park)}$ is preselected via bits MR5[8:6].
- During operation without WRITE commands, the termination is controlled as follows:
  - Nominal termination strength $R_{TT(NOM)}$ or $R_{TT(Park)}$ is selected.
  - $R_{TT(NOM)}$ on/off timing is controlled via ODT pin and latencies DODTLon and DODTLoff, and $R_{TT(Park)}$ is on when ODT is LOW.
- When a WRITE command (WR, WRA, WRS4, WRS8, WRAS4, and WRAS8) is registered, and if dynamic ODT is enabled, the termination is controlled as follows:
  - Latency ODTLcnw after the WRITE command, termination strength $R_{TT(WR)}$ is selected.
  - Latency ODTLcwn8 (for BL8, fixed by MRS or selected OTF) or ODTLcwn4 (for BC4, fixed by MRS or selected OTF) after the WRITE command, termination strength $R_{TT(WR)}$ is de-selected.

One or two clocks will be added into or subtracted from ODTLcwn8 and ODTLcwn4, depending on write CRC mode and/or 2^{t}CK preamble enablement.

The following table shows latencies and timing parameters relevant to the on-die termination control in dynamic ODT mode. The dynamic ODT feature is not supported in DLL-off mode. An MRS command must be used to set $R_{TT(WR)}$ to disable dynamic ODT externally (MR2[11:9] = 000).

Table 75: Dynamic ODT Latencies and Timing (1^{t}CK Preamble Mode and CRC Disabled)

Name and Description	Abbr.	Defined from	Defined to	1600/1866/2133/2400	2666	2933/3200	Unit
ODT latency for change from $R_{TT(Park)}$/$R_{TT(NOM)}$ to $R_{TT(WR)}$	ODTLcnw	Registering external WRITE command	Change R_{TT} strength from $R_{TT(Park)}$/$R_{TT(NOM)}$ to $R_{TT(WR)}$	ODTLcnw = WL - 2			^{t}CK
ODT latency for change from $R_{TT(WR)}$ to $R_{TT(Park)}$/$R_{TT(NOM)}$ (BC = 4)	ODTLcwn4	Registering external WRITE command	Change R_{TT} strength from $R_{TT(WR)}$ to $R_{TT(Park)}$/$R_{TT(NOM)}$	ODTLcwn4 = 4 + ODTLcnw			^{t}CK
ODT latency for change from $R_{TT(WR)}$ to $R_{TT(Park)}$/$R_{TT(NOM)}$ (BL = 8)	ODTLcwn8	Registering external WRITE command	Change R_{TT} strength from $R_{TT(NOM)}$ to $R_{TT(WR)}$	ODTLcwn8 = 6 + ODTLcnw			^{t}CK (AVG)
R_{TT} change skew	^{t}ADC	ODTLcnw ODTLcwn	R_{TT} valid	^{t}ADC (MIN) = 0.30 ^{t}ADC (MAX) = 0.70	^{t}ADC (MIN) = 0.28 ^{t}ADC (MAX) = 0.72	^{t}ADC (MIN) = 0.26 ^{t}ADC (MAX) = 0.74	^{t}CK (AVG)

Micron Technology, Inc. reserves the right to change products or specifications without notice.
© 2018 Micron Technology, Inc. All rights reserved.

Table 76: Dynamic ODT Latencies and Timing with Preamble Mode and CRC Mode Matrix

Symbol	1tCK Parameter		2tCK Parameter		Unit
	CRC Off	CRC On	CRC Off	CRC On	
ODTLcnw[1]	WL - 2	WL - 2	WL - 3	WL - 3	tCK
ODTLcwn4	ODTLcnw + 4	ODTLcnw + 7	ODTLcnw + 5	ODTLcnw + 8	
ODTLcwn8	ODTLcnw + 6	ODTLcnw + 7	ODTLcnw + 7	ODTLcnw + 8	

Notes: 1. ODTLcnw = WL - 2 (1tCK preamble) or WL - 3 (2tCK preamble).

Figure 206: Dynamic ODT (1t CK Preamble; CL = 14, CWL = 11, BL = 8, AL = 0, CRC Disabled)

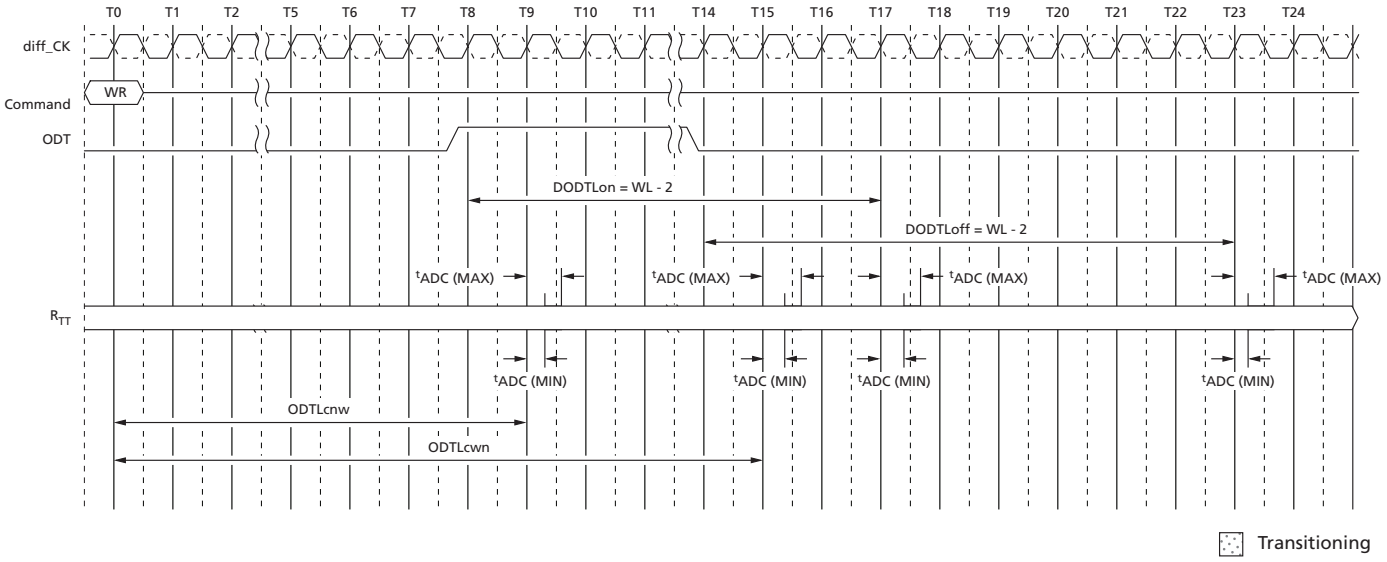

Notes: 1. ODTLcnw = WL - 2 (1tCK preamble) or WL - 3 (2tCK preamble).
2. If BC4, then ODTLcwn = WL + 4 if CRC disabled or WL + 5 if CRC enabled; If BL8, then ODTLcwn = WL + 6 if CRC disabled or WL + 7 if CRC enabled.

Figure 207: Dynamic ODT Overlapped with $R_{TT(NOM)}$ (CL = 14, CWL = 11, BL = 8, AL = 0, CRC Disabled)

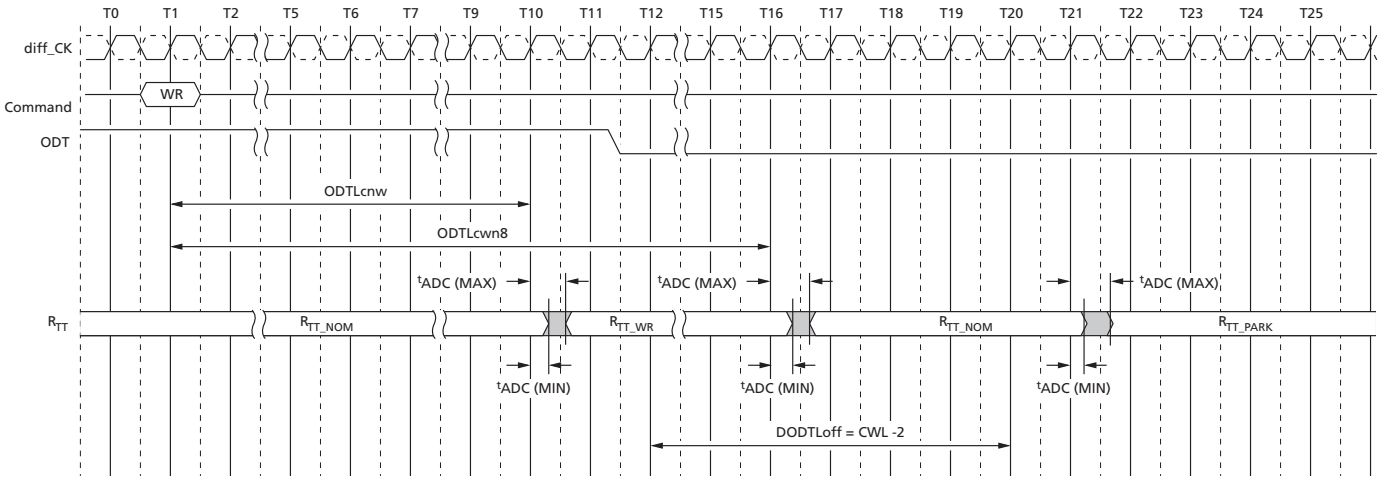

Micron Technology, Inc. reserves the right to change products or specifications without notice.
© 2018 Micron Technology, Inc. All rights reserved.

Note: 1. Behavior with WR command issued while ODT is registered HIGH.

Micron Technology, Inc. reserves the right to change products or specifications without notice.
© 2018 Micron Technology, Inc. All rights reserved.

Asynchronous ODT Mode

Asynchronous ODT mode is selected when the DRAM runs in DLL-off mode. In asynchronous ODT timing mode, the internal ODT command is *not* delayed by either additive latency (AL) or the parity latency (PL) relative to the external ODT signal ($R_{TT(NOM)}$). In asynchronous ODT mode, two timing parameters apply: ^{t}AONAS (MIN/MAX), and ^{t}AOFAS (MIN/MAX).

$R_{TT(NOM)}$ Turn-on Time

- Minimum $R_{TT(NOM)}$ turn-on time (^{t}AONAS [MIN]) is when the device termination circuit leaves $R_{TT(Park)}$ and ODT resistance begins to turn on.
- Maximum $R_{TT(NOM)}$ turn-on time (^{t}AONAS [MAX]) is when the ODT resistance has reached $R_{TT(NOM)}$.
- ^{t}AONAS (MIN) and ^{t}AONAS (MAX) are measured from ODT being sampled HIGH.

$R_{TT(NOM)}$ Turn-off Time

- Minimum $R_{TT(NOM)}$ turn-off time (^{t}AOFAS [MIN]) is when the device's termination circuit starts to leave $R_{TT(NOM)}$.
- Maximum $R_{TT(NOM)}$ turn-off time (^{t}AOFAS [MAX]) is when the on-die termination has reached $R_{TT(Park)}$.
- ^{t}AOFAS (MIN) and ^{t}AOFAS (MAX) are measured from ODT being sampled LOW.

Figure 208: Asynchronous ODT Timings with DLL Off

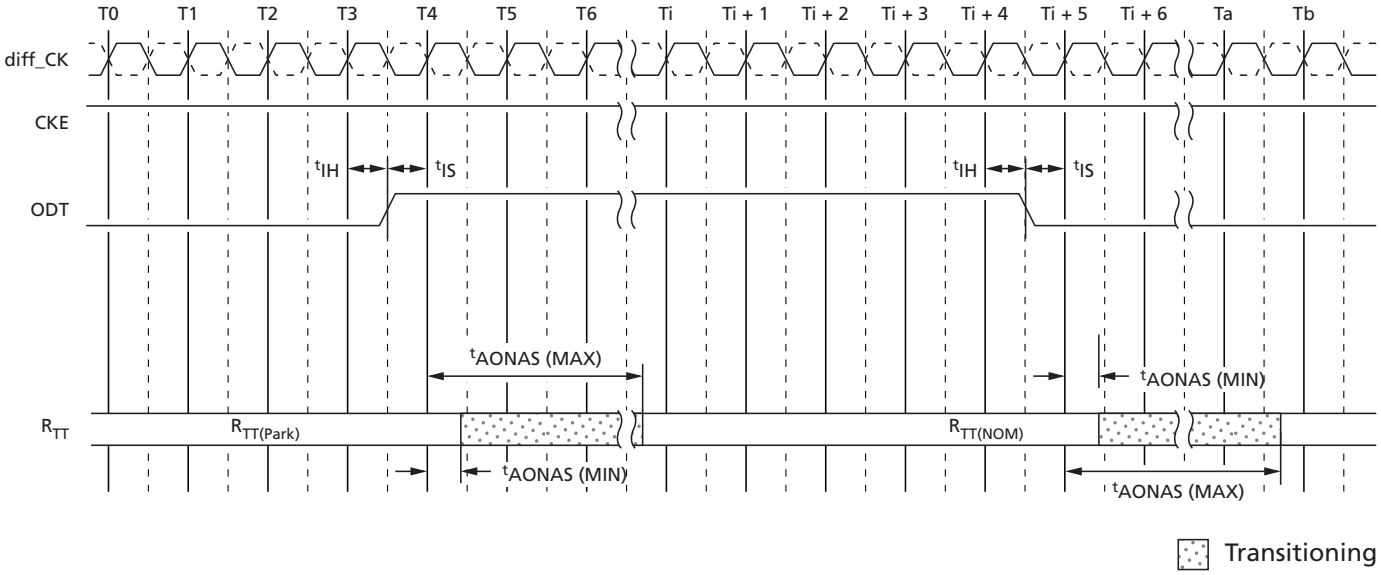

Micron Technology, Inc. reserves the right to change products or specifications without notice.
© 2018 Micron Technology, Inc. All rights reserved.

Electrical Specifications

Absolute Ratings

Stresses greater than those listed may cause permanent damage to the device. This is a stress rating only, and functional operation of the device at these or any other conditions outside those indicated in the operational sections of this specification is not implied. Exposure to absolute maximum rating conditions for extended periods may adversely affect reliability. Although "unlimited" row accesses to the same row is allowed within the refresh period; excessive row accesses to the same row over a long term can result in degraded operation.

Table 77: Absolute Maximum Ratings

Symbol	Parameter	Min	Max	Unit	Notes
V_{DD}	Voltage on V_{DD} pin relative to V_{SS}	–0.4	1.5	V	1
V_{DDQ}	Voltage on V_{DDQ} pin relative to V_{SS}	–0.4	1.5	V	1
V_{PP}	Voltage on V_{PP} pin relative to V_{SS}	–0.4	3.0	V	3
V_{IN}, V_{OUT}	Voltage on any pin relative to V_{SS}	–0.4	1.5	V	
T_{STG}	Storage temperature	–55	150	°C	2

Notes: 1. V_{DD} and V_{DDQ} must be within 300mV of each other at all times, and V_{REF} must not be greater than 0.6 × V_{DDQ}. When V_{DD} and V_{DDQ} are <500mV, V_{REF} can be ≤300mV.
2. Storage temperature is the case surface temperature on the center/top side of the DRAM. For the measurement conditions, please refer to the JESD51-2 standard.
3. V_{PP} must be equal to or greater than V_{DD}/V_{DDQ} at all times when powered.

DRAM Component Operating Temperature Range

Operating temperature, T_{OPER}, is the case surface temperature on the center/top side of the DRAM. For measurement conditions, refer to the JEDEC document JESD51-2.

Table 78: Temperature Range

Symbol	Parameter	Min	Max	Unit	Notes
T_{OPER}	Normal operating temperature range	-40	85	°C	1
	Extended temperature range (optional)	>85	105	°C	2

Notes: 1. The normal temperature range specifies the temperatures at which all DRAM specifications will be supported. During operation, the DRAM case temperature must be maintained between 0°C to 85°C under all operating conditions for the commercial offering; The industrial and automotive temperature offerings allow the case temperature to go below 0°C to -40°C.
2. Some applications require operation of the commercial, industrial, and automotive temperature DRAMs in the extended temperature range (between 85°C and 105°C case temperature). Full specifications are supported in this range, but the following additional conditions apply:
   - Refer to tREFI and tRFC parameters table for tREFI requirements when operating above 85°C
   - If SELF REFRESH operation is required in the extended temperature range, it is mandatory to use either the manual self refresh mode with extended temperature range capability (MR2[6] = 0 and MR2 [7] = 1) or enable the optional auto self refresh mode (MR2 [6] = 1 and MR2 [7] = 1).

Micron Technology, Inc. reserves the right to change products or specifications without notice.
© 2018 Micron Technology, Inc. All rights reserved.

Electrical Characteristics – AC and DC Operating Conditions

Supply Operating Conditions

Table 79: Recommended Supply Operating Conditions

Symbol	Parameter	Rating			Unit	Notes
		Min	Typ	Max		
V_{DD}	Supply voltage	1.14	1.2		1.26V	1, 2, 3, 4, 5
V_{DDQ}	Supply voltage for output	1.14	1.2		1.26V	1, 2, 6
V_{PP}	Wordline supply voltage	2.375	2.5		2.750V	7

Notes: 1. Under all conditions V_{DDQ} must be less than or equal to V_{DD}.
2. V_{DDQ} tracks with V_{DD}. AC parameters are measured with V_{DD} and V_{DDQ} tied together.
3. V_{DD} slew rate between 300mV and 80% of $V_{DD,min}$ shall be between 0.004 V/ms and 600 V/ms, 20 MHz band-limited measurement.
4. V_{DD} ramp time from 300mV to $V_{DD,min}$ shall be no longer than 200ms.
5. A stable valid V_{DD} level is a set DC level (0 Hz to 250 KHz) and must be no less than $V_{DD,min}$ and no greater than $V_{DD,max}$. If the set DC level is altered anytime after initialization, the DLL reset and calibrations must be performed again after the new set DC level is final. AC noise of ±60mV (greater than 250 KHz) is allowed on V_{DD} provided the noise doesn't alter V_{DD} to less than $V_{DD,min}$ or greater than $V_{DD,max}$.
6. A stable valid V_{DDQ} level is a set DC level (0 Hz to 250 KHz) and must be no less than $V_{DDQ,min}$ and no greater than $V_{DDQ,max}$. If the set DC level is altered anytime after initialization, the DLL reset and calibrations must be performed again after the new set DC level is final. AC noise of ±60mV (greater than 250 KHz) is allowed on V_{DDQ} provided the noise doesn't alter V_{DDQ} to less than $V_{DDQ,min}$ or greater than $V_{DDQ,max}$.
7. A stable valid V_{PP} level is a set DC level (0 Hz to 250 KHz) and must be no less than $V_{PP,min}$ and no greater than $V_{PP,max}$. If the set DC level is altered anytime after initialization, the DLL reset and calibrations must be performed again after the new set DC level is final. AC noise of ±120mV (greater than 250 KHz) is allowed on V_{PP} provided the noise doesn't alter V_{PP} to less than $V_{PP,min}$ or greater than $V_{PP,max}$.

Table 80: V_{DD} Slew Rate

Symbol	Min	Max	Unit	Notes
V_{DD_sl}	0.004	600	V/ms	1, 2
V_{DD_on}	–	200	ms	3

Notes: 1. Measurement made between 300mV and 80% V_{DD} (minimum level).
2. The DC bandwidth is limited to 20 MHz.
3. Maximum time to ramp V_{DD} from 300 mV to V_{DD} minimum.

Micron Technology, Inc. reserves the right to change products or specifications without notice.
© 2018 Micron Technology, Inc. All rights reserved.

Leakages

Table 81: Leakages

Condition	Symbol	Min	Max	Unit	Notes
Input leakage (excluding ZQ and TEN)	I_{IN}	–2	2	µA	1
ZQ leakage	I_{ZQ}	–50	10	µA	1
TEN leakage	I_{TEN}	–6	10	µA	1, 2
V_{REFCA} leakage	I_{VREFCA}	–2	2	µA	3
Output leakage: $V_{OUT} = V_{DDQ}$	I_{OZpd}	–	10	µA	4
Output leakage: $V_{OUT} = V_{SSQ}$	I_{OZpu}	–50	–	µA	4, 5

Notes: 1. Input under test $0V < V_{IN} < 1.1V$.
2. Additional leakage due to weak pull-down.
3. $V_{REFCA} = V_{DD}/2$, V_{DD} at valid level after initialization.
4. DQs are disabled.
5. ODT is disabled with the ODT input HIGH.

V_{REFCA} Supply

V_{REFCA} is to be supplied to the DRAM and equal to $V_{DD}/2$. The V_{REFCA} is a reference supply input and therefore does not draw biasing current.

The DC-tolerance limits and AC-noise limits for the reference voltages V_{REFCA} are illustrated in the figure below. The figure shows a valid reference voltage $V_{REF(t)}$ as a function of time (V_{REF} stands for V_{REFCA}). $V_{REF(DC)}$ is the linear average of $V_{REF(t)}$ over a very long period of time (1 second). This average has to meet the MIN/MAX requirements. Furthermore, $V_{REF(t)}$ may temporarily deviate from $V_{REF(DC)}$ by no more than ±1% V_{DD} for the AC-noise limit.

Figure 209: V_{REFDQ} Voltage Range

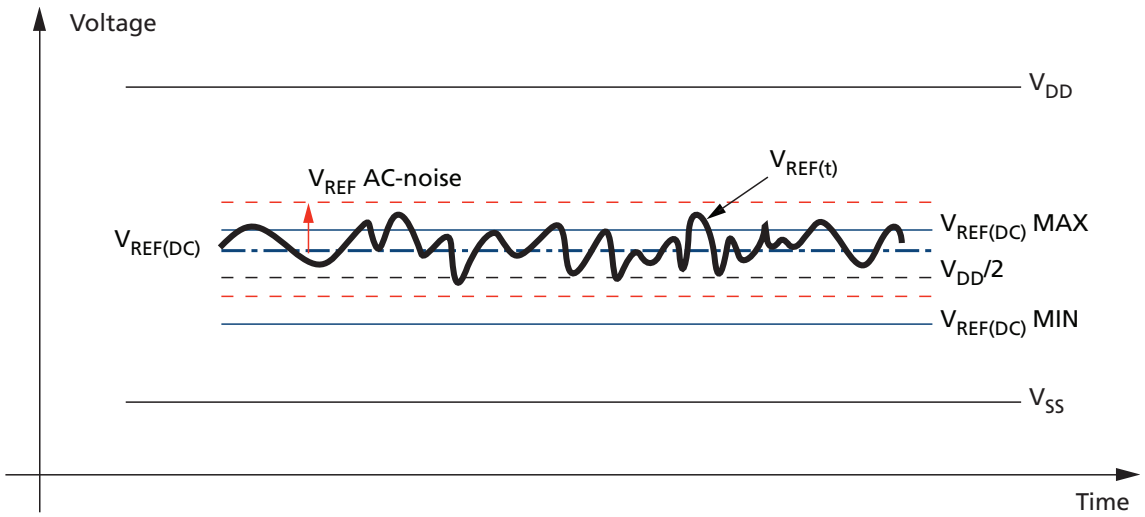

The voltage levels for setup and hold time measurements are dependent on V_{REF}. V_{REF} is understood as $V_{REF(DC)}$, as defined in the above figure. This clarifies that DC-variations of V_{REF} affect the absolute

Micron Technology, Inc. reserves the right to change products or specifications without notice.
© 2018 Micron Technology, Inc. All rights reserved.

voltage a signal has to reach to achieve a valid HIGH or LOW level, and therefore, the time to which setup and hold is measured. System timing and voltage budgets need to account for $V_{REF(DC)}$ deviations from the optimum position within the data-eye of the input signals. This also clarifies that the DRAM setup/hold specification and derating values need to include time and voltage associated with V_{REF} AC-noise. Timing and voltage effects due to AC-noise on V_{REF} up to the specified limit (±1% of V_{DD}) are included in DRAM timings and their associated deratings.

V_{REFDQ} Supply and Calibration Ranges

The device internally generates its own V_{REFDQ}. DRAM internal V_{REFDQ} specification parameters: voltage range, step size, V_{REF} step time, V_{REF} full step time, and V_{REF} valid level are used to help provide estimated values for the internal V_{REFDQ} and are not pass/fail limits. The voltage operating range specifies the minimum required range for DDR4 SDRAM devices. The minimum range is defined by $V_{REFDQ,min}$ and $V_{REFDQ,max}$. A calibration sequence should be performed by the DRAM controller to adjust V_{REFDQ} and optimize the timing and voltage margin of the DRAM data input receivers.

Table 82: V_{REFDQ} Specification

Parameter	Symbol	Min	Typ	Max	Unit	Notes
Range 1 V_{REFDQ} operating points	V_{REFDQ} R1	60%	–	92%	V_{DDQ}	1, 2
Range 2 V_{REFDQ} operating points	V_{REFDQ} R2	45%	–	77%	V_{DDQ}	1, 2
V_{REF} step size	$V_{REF,step}$	0.5%	0.65%	0.8%	V_{DDQ}	3
V_{REF} set tolerance	V_{REF,set_tol}	–1.625%	0%	1.625%	V_{DDQ}	4, 5, 6
		–0.15%	0%	0.15%	V_{DDQ}	4, 7, 8
V_{REF} step time	$V_{REF,time}$	–	–	150	ns	9, 10, 11
V_{REF} valid tolerance	$V_{REF_val_tol}$	–0.15%	0%	0.15%	V_{DDQ}	12

Notes:
1. $V_{REF(DC)}$ voltage is referenced to $V_{DDQ(DC)}$. $V_{DDQ(DC)}$ is 1.2V.
2. DRAM range 1 or range 2 is set by the MRS6[6]6.
3. V_{REF} step size increment/decrement range. V_{REF} at DC level.
4. $V_{REF,new} = V_{REF,old} \pm n \times V_{REF,step}$; n = number of steps. If increment, use "+," if decrement, use "-."
5. For n >4, the minimum value of V_{REF} setting tolerance = $V_{REF,new}$ - 1.625% × V_{DDQ}. The maximum value of V_{REF} setting tolerance = $V_{REF,new}$ + 1.625% × V_{DDQ}.
6. Measured by recording the MIN and MAX values of the V_{REF} output over the range, drawing a straight line between those points, and comparing all other V_{REF} output settings to that line.
7. For n ≤4, the minimum value of V_{REF} setting tolerance = $V_{REF,new}$ - 0.15% × V_{DDQ}. The maximum value of V_{REF} setting tolerance = $V_{REF,new}$ + 0.15% × V_{DDQ}.
8. Measured by recording the MIN and MAX values of the V_{REF} output across four consecutive steps (n = 4), drawing a straight line between those points, and comparing all V_{REF} output settings to that line.
9. Time from MRS command to increment or decrement one step size for V_{REF}.
10. Time from MRS command to increment or decrement more than one step size up to the full range of V_{REF}.
11. If the V_{REF} monitor is enabled, V_{REF} must be derated by +10ns if DQ bus load is 0pF and an additional +15 ns/pF of DQ bus loading.
12. Only applicable for DRAM component-level test/characterization purposes. Not applicable for normal mode of operation. V_{REF} valid qualifies the step times, which will be characterized at the component level.

Micron Technology, Inc. reserves the right to change products or specifications without notice.
© 2018 Micron Technology, Inc. All rights reserved.

V_{REFDQ} Ranges

MR6[6] selects range 1 (60% to 92.5% of V_{DDQ}) or range 2 (45% to 77.5% of V_{DDQ}), and MR6[5:0] sets the V_{REFDQ} level, as listed in the following table. The values in MR6[6:0] will update the V_{DDQ} range and level independent of MR6[7] setting. It is recommended MR6[7] be enabled when changing the settings in MR6[6:0], and it is highly recommended MR6[7] be enabled when changing the settings in MR6[6:0] multiple times during a calibration routine.

Table 83: V_{REFDQ} Range and Levels

MR6[5:0]	MR6[6] 0 = Range 1	MR6[6] 1 = Range 2	MR6[5:0]	MR6[6] 0 = Range 1	MR6[6] 1 = Range 2
00 0000	60.00%	45.00%	01 1010	76.90%	61.90%
00 0001	60.65%	45.65%	01 1011	77.55%	62.55%
00 0010	61.30%	46.30%	01 1100	78.20%	63.20%
00 0011	61.95%	46.95%	01 1101	78.85%	63.85%
00 0100	62.60%	47.60%	01 1110	79.50%	64.50%
00 0101	63.25%	48.25%	01 1111	80.15%	65.15%
00 0110	63.90%	48.90%	10 0000	80.80%	65.80%
00 0111	64.55%	49.55%	10 0001	81.45%	66.45%
00 1000	65.20%	50.20%	10 0010	82.10%	67.10%
00 1001	65.85%	50.85%	10 0011	82.75%	67.75%
00 1010	66.50%	51.50%	10 0100	83.40%	68.40%
00 1011	67.15%	52.15%	10 0101	84.05%	69.05%
00 1100	67.80%	52.80%	10 0110	84.70%	69.70%
00 1101	68.45%	53.45%	10 0111	85.35%	70.35%
00 1110	69.10%	54.10%	10 1000	86.00%	71.00%
00 1111	69.75%	54.75%	10 1001	86.65%	71.65%
01 0000	70.40%	55.40%	10 1010	87.30%	72.30%
01 0001	71.05%	56.05%	10 1011	87.95%	72.95%
01 0010	71.70%	56.70%	10 1100	88.60%	73.60%
01 0011	72.35%	57.35%	10 1101	89.25%	74.25%
01 0100	73.00%	58.00%	10 1110	89.90%	74.90%
01 0101	73.65%	58.65%	10 1111	90.55%	75.55%
01 0110	74.30%	59.30%	11 0000	91.20%	76.20%
01 0111	74.95%	59.95%	11 0001	91.85%	76.85%
01 1000	75.60%	60.60%	11 0010	92.50%	77.50%
01 1001	76.25%	61.25%	11 0011 to 11 1111 are reserved		

Micron Technology, Inc. reserves the right to change products or specifications without notice.
© 2018 Micron Technology, Inc. All rights reserved.

Electrical Characteristics – AC and DC Single-Ended Input Measurement Levels

RESET_n Input Levels

Table 84: RESET_n Input Levels (CMOS)

Parameter	Symbol	Min	Max	Unit	Note
AC input high voltage	$V_{IH(AC)_RESET}$	0.8 × V_{DD}	V_{DD}	V	1
DC input high voltage	$V_{IH(DC)_RESET}$	0.7 × V_{DD}	V_{DD}	V	2
DC input low voltage	$V_{IL(DC)_RESET}$	V_{SS}	0.3 × V_{DD}	V	3
AC input low voltage	$V_{IL(AC)_RESET}$	V_{SS}	0.2 × V_{DD}	V	4
Rising time	$^{t}R_RESET$	–	1	µs	5
RESET pulse width after power-up	$^{t}PW_RESET_S$	1	–	µs	6, 7
RESET pulse width during power-up	$^{t}PW_RESET_L$	200	–	µs	6

Notes: 1. Overshoot should not exceed the V_{IN} shown in the Absolute Maximum Ratings table.
2. After RESET_n is registered HIGH, the RESET_n level must be maintained above $V_{IH(DC)_RESET}$, otherwise operation will be uncertain until it is reset by asserting RESET_n signal LOW.
3. After RESET_n is registered LOW, the RESET_n level must be maintained below $V_{IL(DC)_RESET}$ during $^{t}PW_RESET$, otherwise the DRAM may not be reset.
4. Undershoot should not exceed the V_{IN} shown in the Absolute Maximum Ratings table.
5. Slope reversal (ring-back) during this level transition from LOW to HIGH should be mitigated as much as possible.
6. RESET is destructive to data contents.
7. See RESET Procedure at Power Stable Condition figure.

Figure 210: RESET_n Input Slew Rate Definition

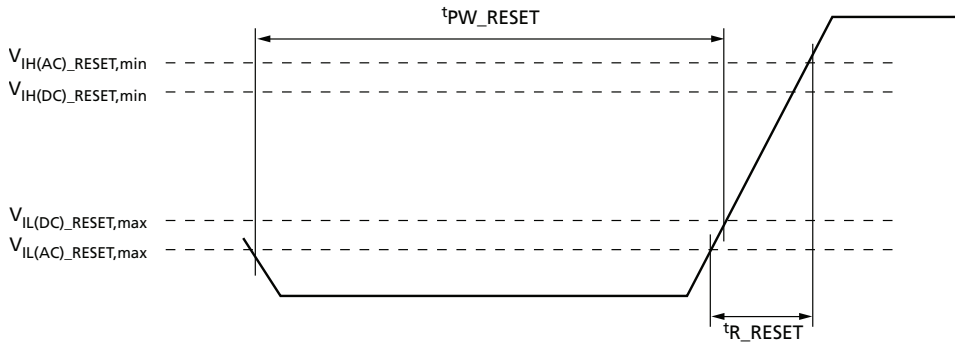

Command/Address Input Levels

Table 85: Command and Address Input Levels: DDR4-1600 Through DDR4-2400

Parameter	Symbol	Min	Max	Unit	Note
AC input high voltage	$V_{IH(AC)}$	V_{REF} + 100	$V_{DD}5$	mV	1, 2, 3
DC input high voltage	$V_{IH(DC)}$	V_{REF} + 75	V_{DD}	mV	1, 2
DC input low voltage	$V_{IL(DC)}$	V_{SS}	V_{REF} - 75	mV	1, 2

Micron Technology, Inc. reserves the right to change products or specifications without notice.
© 2018 Micron Technology, Inc. All rights reserved.

Table 85: Command and Address Input Levels: DDR4-1600 Through DDR4-2400 (Continued)

Parameter	Symbol	Min	Max	Unit	Note
AC input low voltage	$V_{IL(AC)}$	V_{SS}5	V_{REF} - 100	mV	1, 2, 3
Reference voltage for CMD/ADDR inputs	$V_{REFFCA(DC)}$	0.49 × V_{DD}	0.51 × V_{DD}	V	4

Notes: 1. For input except RESET_n. $V_{REF} = V_{REFCA(DC)}$.
2. $V_{REF} = V_{REFCA(DC)}$.
3. Input signal must meet $V_{IL}/V_{IH(AC)}$ to meet ^{t}IS timings and $V_{IL}/V_{IH(DC)}$ to meet ^{t}IH timings.
4. The AC peak noise on V_{REF} may not allow V_{REF} to deviate from $V_{REFCA(DC)}$ by more than ±1% V_{DD} (for reference: approximately ±12mV).
5. Refer to "Overshoot and Undershoot Specifications."

Table 86: Command and Address Input Levels: DDR4-2666

Parameter	Symbol	Min	Max	Unit	Note
AC input high voltage	$V_{IH(AC)}$	V_{REF} + 90	V_{DD}5	mV	1, 2, 3
DC input high voltage	$V_{IH(DC)}$	V_{REF} + 65	V_{DD}	mV	1, 2
DC input low voltage	$V_{IL(DC)}$	V_{SS}	V_{REF} - 65	mV	1, 2
AC input low voltage	$V_{IL(AC)}$	V_{SS}5	V_{REF} - 90	mV	1, 2, 3
Reference voltage for CMD/ADDR inputs	$V_{REFFCA(DC)}$	0.49 × V_{DD}	0.51 × V_{DD}	V	4

Notes: 1. For input except RESET_n. $V_{REF} = V_{REFCA(DC)}$.
2. $V_{REF} = V_{REFCA(DC)}$.
3. Input signal must meet $V_{IL}/V_{IH(AC)}$ to meet ^{t}IS timings and $V_{IL}/V_{IH(DC)}$ to meet ^{t}IH timings.
4. The AC peak noise on V_{REF} may not allow V_{REF} to deviate from $V_{REFCA(DC)}$ by more than ±1% V_{DD} (for reference: approximately ±12mV).
5. Refer to "Overshoot and Undershoot Specifications."

Table 87: Command and Address Input Levels: DDR4-2933 and DDR4-3200

Parameter	Symbol	Min	Max	Unit	Note
AC input high voltage	$V_{IH(AC)}$	V_{REF} + 90	V_{DD}5	mV	1, 2, 3
DC input high voltage	$V_{IH(DC)}$	V_{REF} + 65	V_{DD}	mV	1, 2
DC input low voltage	$V_{IL(DC)}$	V_{SS}	V_{REF} - 65	mV	1, 2
AC input low voltage	$V_{IL(AC)}$	V_{SS}5	V_{REF} - 90	mV	1, 2, 3
Reference voltage for CMD/ADDR inputs	$V_{REFFCA(DC)}$	0.49 × V_{DD}	0.51 × V_{DD}	V	4

Notes: 1. For input except RESET_n. $V_{REF} = V_{REFCA(DC)}$.
2. $V_{REF} = V_{REFCA(DC)}$.
3. Input signal must meet $V_{IL}/V_{IH(AC)}$ to meet ^{t}IS timings and $V_{IL}/V_{IH(DC)}$ to meet ^{t}IH timings.
4. The AC peak noise on V_{REF} may not allow V_{REF} to deviate from $V_{REFCA(DC)}$ by more than ±1% V_{DD} (for reference: approximately ±12mV).
5. Refer to "Overshoot and Undershoot Specifications."

Table 88: Single-Ended Input Slew Rates

Parameter	Symbol	Min	Max	Unit	Note
Single-ended input slew rate – CA	SR_{CA}	1.0	7.0	V/ns	1, 2, 3, 4

Micron Technology, Inc. reserves the right to change products or specifications without notice.
© 2018 Micron Technology, Inc. All rights reserved.

Notes: 1. For input except RESET_n.
2. $V_{REF} = V_{REFCA(DC)}$.
3. $^{t}IS/^{t}IH$ timings assume SR_{CA} = 1V/ns.
4. Measured between $V_{IH(AC)}$ and $V_{IL(AC)}$ for falling edges and between $V_{IL(AC)}$ and $V_{IH(AC)}$ for rising edges

Figure 211: Single-Ended Input Slew Rate Definition

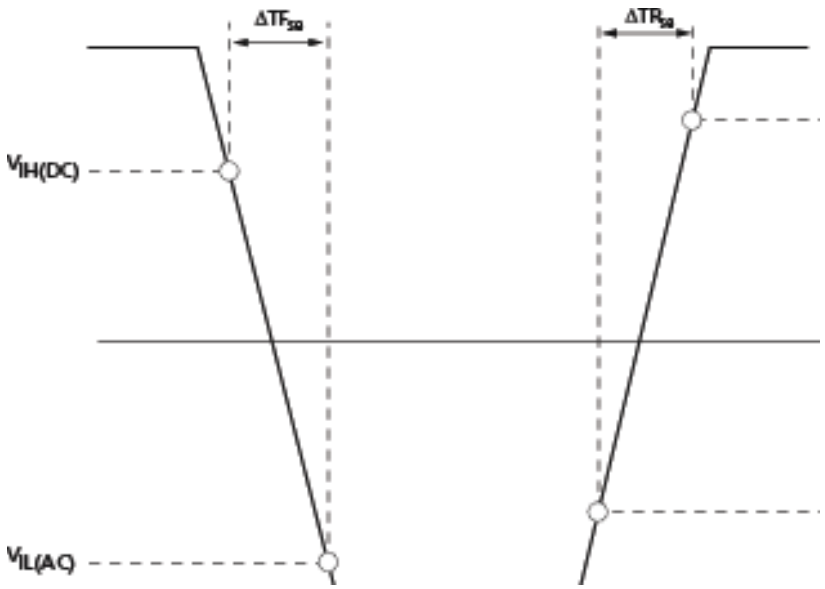

Command, Control, and Address Setup, Hold, and Derating

The total ^{t}IS (setup time) and ^{t}IH (hold time) required is calculated to account for slew rate variation by adding the data sheet ^{t}IS (base) values, the $V_{IL(AC)}/V_{IH(AC)}$ points, and ^{t}IH (base) values, the $V_{IL(DC)}/V_{IH(DC)}$ points; to the $\Delta^{t}IS$ and $\Delta^{t}IH$ derating values, respectively. The base values are derived with single-end signals at 1V/ns and differential clock at 2 V/ns. Example: ^{t}IS (total setup time) = ^{t}IS (base) + $\Delta^{t}IS$. For a valid transition, the input signal has to remain above/below $V_{IH(AC)}/V_{IL(AC)}$ for the time defined by ^{t}VAC.

Although the total setup time for slow slew rates might be negative (for example, a valid input signal will not have reached $V_{IH(AC)}/V_{IL(AC)}$ at the time of the rising clock transition), a valid input signal is still required to complete the transition and to reach $V_{IH(AC)}/V_{IL(AC)}$. For slew rates that fall between the values listed in derating tables, the derating values may be obtained by linear interpolation.

Setup (^{t}IS) nominal slew rate for a rising signal is defined as the slew rate between the last crossing of $V_{IL(DC)max}$ and the first crossing of $V_{IH(AC)min}$ that does not ring back below $V_{IH(DC)min}$. Setup (^{t}IS) nominal slew rate for a falling signal is defined as the slew rate between the last crossing of $V_{IH(DC)min}$ and the first crossing of $V_{IL(AC)max}$ that does not ring back above $V_{IL(DC)max}$.

Hold (^{t}IH) nominal slew rate for a rising signal is defined as the slew rate between the last crossing of $V_{IL(DC)max}$ and the first crossing of $V_{IH(AC)min}$ that does not ring back below $V_{IH(DC)min}$. Hold (^{t}IH)

Micron Technology, Inc. reserves the right to change products or specifications without notice.
© 2018 Micron Technology, Inc. All rights reserved.

nominal slew rate for a falling signal is defined as the slew rate between the last crossing of $V_{IH(DC)min}$ and the first crossing of $V_{IL(AC)min}$ that does not ring back above $V_{IL(DC)max}$.

Table 89: Command and Address Setup and Hold Values Referenced – AC/DC-Based

Symbol	1600	1866	2133	2400	2666	2933	3200	Unit	Reference
^{t}IS(base, AC100)	115	100	80	62	–	–	–	ps	$V_{IH(AC)}/V_{IL(AC)}$
^{t}IH(base, DC75)	140	125	105	87	–	–	–	ps	$V_{IH(DC)}/V_{IL(DC)}$
^{t}IS(base, AC90)	–	–	–	–	55	48	40	ps	$V_{IH(AC)}/V_{IL(AC)}$
^{t}IH(base, DC65)	–	–	–	–	80	73	65	ps	$V_{IH(DC)}/V_{IL(DC)}$
$^{t}IS/^{t}IH$(Vref)	215	200	180	162	145	138	130	ps	$V_{IH(DC)}/V_{IL(DC)}$

Table 90: Derating Values for $^{t}IS/^{t}IH$ – AC100DC75-Based

$\Delta^{t}IS$ with AC100 Threshold, $\Delta^{t}IH$ with DC75 Threshold Derating (ps) – AC/DC-Based																
CMD/ADDR Slew Rate V/ns	CK, CK# Differential Slew Rate															
	10.0 V/ns		8.0 V/ns		6.0 V/ns		4.0 V/ns		3.0 V/ns		2.0 V/ns		1.5 V/ns		1.0 V/ns	
	$\Delta^{t}IS$	$\Delta^{t}IH$	$\Delta^{t}IS$	$\Delta^{t}IH$	$\Delta^{t}IS$	$\Delta^{t}IH$	$\Delta^{t}IS$	$\Delta^{t}IH$	$\Delta^{t}IS$	$\Delta^{t}IH$	$\Delta^{t}IH$	$\Delta^{t}IH$	$\Delta^{t}IS$	$\Delta^{t}IH$	$\Delta^{t}IS$	$\Delta^{t}IH$
7.0	76	54	76	55	77	56	79	58	82	60	86	64	94	73	111	89
6.0	73	53	74	53	75	54	77	56	79	58	83	63	92	71	108	88
5.0	70	50	71	51	72	52	74	54	76	56	80	60	88	68	105	85
4.0	65	46	66	47	67	48	69	50	71	52	75	56	83	65	100	81
3.0	57	40	57	41	58	42	60	44	63	46	67	50	75	58	92	75
2.0	40	28	41	28	42	29	44	31	46	33	50	38	58	46	75	63
1.5	23	15	24	16	25	17	27	19	29	21	33	25	42	33	58	50
1.0	–10	–10	–9	–9	–8	–8	–6	–6	–4	–4	**0**	**0**	8	8	25	25
0.9	–17	–14	–16	–14	–15	–13	–13	–10	–11	–8	–7	–4	1	4	18	21
0.8	–26	–19	–25	–19	–24	–18	–22	–16	–20	–14	–16	–9	–7	–1	9	16
0.7	–37	–26	–36	–25	–35	–24	–33	–22	–31	–20	–27	–16	–18	–8	–2	9
0.6	–52	–35	–51	–34	–50	–33	–48	–31	–46	–29	–42	–25	–33	–17	–17	0
0.5	–73	–48	–72	–47	–71	–46	–69	–44	–67	–42	–63	–38	–54	–29	–38	–13
0.4	–104	–66	–103	–66	–102	–65	–100	–63	–98	–60	–94	–56	–85	–48	–69	–31

Micron Technology, Inc. reserves the right to change products or specifications without notice.
© 2018 Micron Technology, Inc. All rights reserved.

Table 91: Derating Values for ^{t}IS/^{t}IH – AC90/DC65-Based

Δ^{t}IS with AC90 Threshold, Δ^{t}IH with DC65 Threshold Derating (ps) – AC/DC-Based																
CMD/ADDR Slew Rate V/ns	CK, CK# Differential Slew Rate															
	10.0 V/ns		8.0 V/ns		6.0 V/ns		4.0 V/ns		3.0 V/ns		2.0 V/ns		1.5 V/ns		1.0 V/ns	
	Δ^{t}IS	Δ^{t}IH	Δ^{t}IS	Δ^{t}IH	Δ^{t}IS	Δ^{t}IH	Δ^{t}IS	Δ^{t}IH	Δ^{t}IS	Δ^{t}IH	Δ^{t}IH	Δ^{t}IH	Δ^{t}IS	Δ^{t}IH	Δ^{t}IS	Δ^{t}IH
7.0	68	47	69	47	70	48	72	50	73	52	77	56	85	63	100	78
6.0	66	45	67	46	68	47	69	49	71	50	75	54	83	62	98	77
5.0	63	43	64	44	65	45	66	46	68	48	72	52	80	60	95	75
4.0	59	40	59	40	60	41	62	43	64	45	68	49	75	56	90	71
3.0	51	34	52	35	53	36	54	38	56	40	60	43	68	51	83	66
2.0	36	24	37	24	38	25	39	27	41	29	45	33	53	40	68	55
1.5	21	13	22	13	23	14	24	16	26	18	30	22	38	29	53	44
1.0	–9	–9	–8	–8	–8	–8	–6	–6	–4	–4	**0**	**0**	8	8	23	23
0.9	–15	–13	–15	–12	–14	–11	–12	–9	–10	–7	–6	–4	1	4	16	19
0.8	–23	–17	–23	–17	–22	–16	–20	–14	–18	–12	–14	–8	–7	–1	8	14
0.7	–34	–23	–33	–22	–32	–21	–30	–20	–28	–18	–25	–14	–17	–6	–2	9
0.6	–47	–31	–47	–30	–46	–29	–44	–27	–42	–25	–38	–22	–31	–14	–16	1
0.5	–67	–42	–66	–41	–65	–40	–63	–38	–61	–36	–58	–33	–50	–25	–35	–10
0.4	–95	–58	–95	–57	–94	–56	–92	–54	–90	–53	–86	–49	–79	–41	–64	–26

Data Receiver Input Requirements

The following parameters apply to the data receiver Rx MASK operation detailed in the Write Timing section, Data Strobe-to-Data Relationship.

The rising edge slew rates are defined by srr1 and srr2. The slew rate measurement points for a rising edge are shown in the figure below. A LOW-to-HIGH transition time, tr1, is measured from 0.5 × $V_{diVW,max}$ below $V_{CENTDQ,midpoint}$ to the last transition through 0.5 × $V_{diVW,max}$ above $V_{CENTDQ,midpoint}$; tr2 is measured from the last transition through 0.5 × $V_{diVW,max}$ above $V_{CENTDQ,midpoint}$ to the first transition through the 0.5 × $V_{IHL(AC)min}$ above $V_{CENTDQ,midpoint}$.

The falling edge slew rates are defined by srf1 and srf2. The slew rate measurement points for a falling edge are shown in the figure below. A HIGH-to-LOW transition time, tf1, is measured from 0.5 × $V_{diVW,max}$ above $V_{CENTDQ,midpoint}$ to the last transition through 0.5 × $V_{diVW,max}$ below $V_{CENTDQ,midpoint}$; tf2 is measured from the last transition through 0.5 × $V_{diVW,max}$ below $V_{CENTDQ,midpoint}$ to the first transition through the 0.5 × $V_{IHL(AC)min}$ below $V_{CENTDQ,midpoint}$.

Micron Technology, Inc. reserves the right to change products or specifications without notice.
© 2018 Micron Technology, Inc. All rights reserved.

Figure 212: DQ Slew Rate Definitions

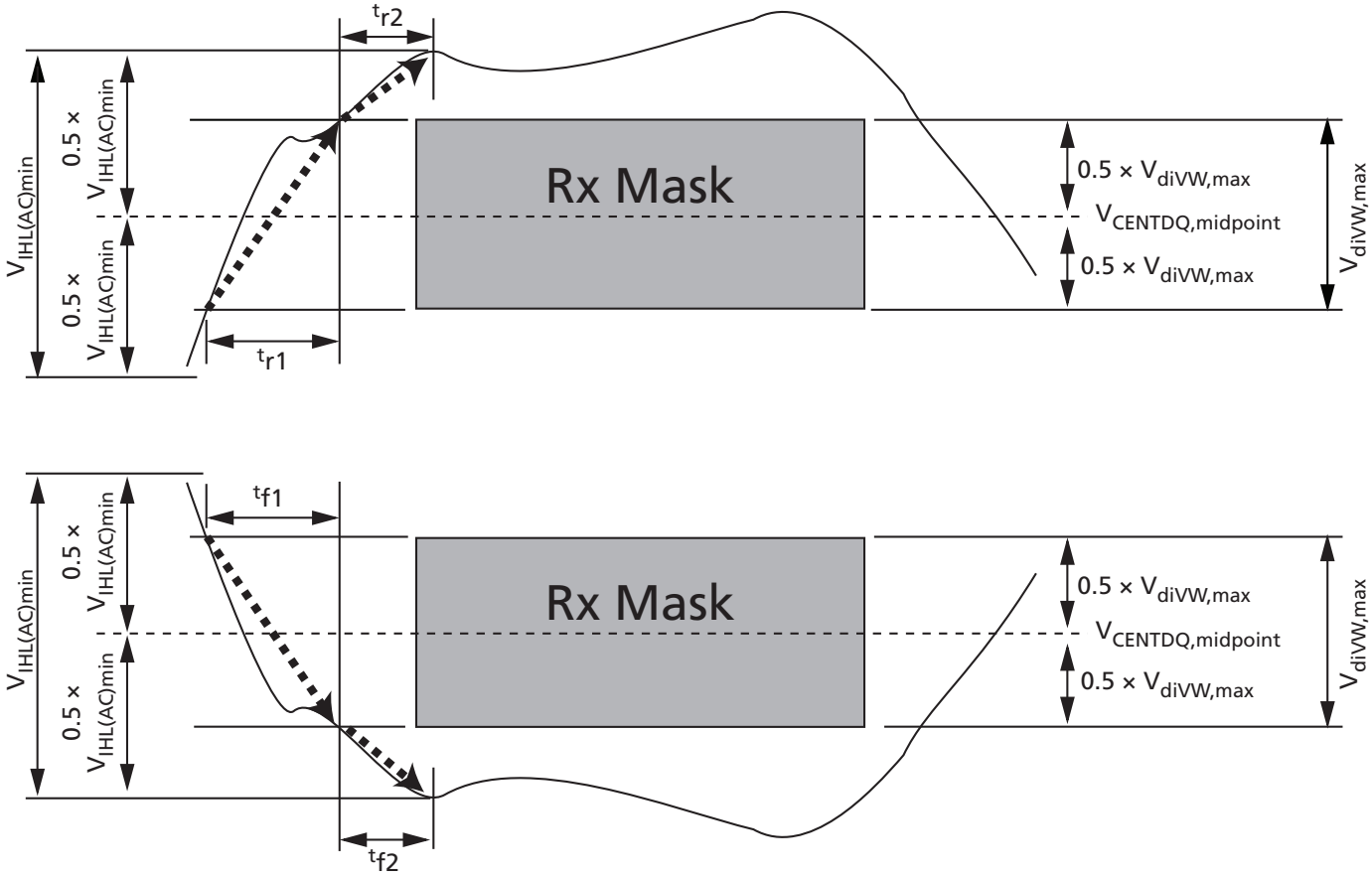

Notes: 1. Rising edge slew rate equation srr1 = $V_{diVW,max}/(^{t}r1)$.
2. Rising edge slew rate equation srr2 = $(V_{IHL(AC)min} - V_{diVW,max})/(2 \times {}^{t}r2)$.
3. Falling edge slew rate equation srf1 = $V_{diVW,max}/(^{t}f1)$.
4. Falling edge slew rate equation srf2 = $(V_{IHL(AC)min} - V_{diVW,max})/(2 \times {}^{t}f2)$.

Table 92: DQ Input Receiver Specifications

Parameter	Symbol	DDR4-1600, 1866, 2133		DDR4-2400		DDR4-2666		DDR4-2933		DDR4-3200		Unit	Notes
		Min	Max	Min	Max	Min	Max	Min	Max	Min	Max		
V_{IN} Rx mask input peak-to-peak	V_{diVW}	–	136	–	130	–	120	–	115	–	110	mV	2, 3
DQ Rx input timing window	TdiVW	–	0.2	–	0.2	–	0.22	–	0.23	–	0.23	UI	2, 3
DQ AC input swing peak-to-peak	$V_{IHL(AC)}$	186	–	160	–	150	–	145	–	140	–	mV	4, 5
DQ input pulse width	TdiPW	0.58	–	0.58	–	0.58	–	0.58	–	0.58	–	UI	6

Micron Technology, Inc. reserves the right to change products or specifications without notice.
© 2018 Micron Technology, Inc. All rights reserved.

Table 92: DQ Input Receiver Specifications (Continued)

Parameter	Symbol	DDR4-1600, 1866, 2133		DDR4-2400		DDR4-2666		DDR4-2933		DDR4-3200		Unit	Notes
		Min	Max	Min	Max	Min	Max	Min	Max	Min	Max		
DQS-to-DQ Rx mask offset	^{t}DQS2DQ	–0.17	0.17	–0.17	0.17	–0.19	0.19	–0.22	0.22	–0.22	0.22	UI	7
DQ-to-DQ Rx mask offset	^{t}DQ2DQ	–	0.1	–	0.1	–	0.105	–	0.115	–	0.125	UI	8
Input slew rate over V_{diVW} if ^{t}CK ≥ 0.937ns	srr1, srf1	1	9	1	9	1	9	1	9	1	9	V/ns	9
Input slew rate over V_{diVW} if 0.937ns > ^{t}CK ≥ 0.625ns	srr1, srf1	–	–	1.25	9	1.25	9	1.25	9	1.25	9	V/ns	9
Rising input slew rate over 1/2 $V_{IHL(AC)}$	srr2	0.2 × srr1	9	0.2 × srr1	9	0.2 × srr1	9	0.2 × srr1	9	0.2 × srr1	9	V/ns	10
Falling input slew rate over 1/2 $V_{IHL(AC)}$	srf2	0.2 × srf1	9	0.2 × srf1	9	0.2 × srf1	9	0.2 × srf1	9	0.2 × srf1	9	V/ns	10

Notes:
1. All Rx mask specifications must be satisfied for each UI. For example, if the minimum input pulse width is violated when satisfying TdiVW (MIN), $V_{diVW,max}$, and minimum slew rate limits, then either TdiVW (MIN) or minimum slew rates would have to be increased to the point where the minimum input pulse width would no longer be violated.
2. Data Rx mask voltage and timing total input valid window where V_{diVW} is centered around $V_{CENTDQ,midpoint}$ after V_{REFDQ} training is completed. The data Rx mask is applied per bit and should include voltage and temperature drift terms. The input buffer design specification is to achieve at least a BER =1^{e-16} when the Rx mask is not violated.
3. Defined over the DQ internal V_{REF} range 1.
4. Overshoot and undershoot specifications apply.
5. DQ input pulse signal swing into the receiver must meet or exceed $V_{IHL(AC)min}$. $V_{IHL(AC)min}$ is to be achieved on an UI basis when a rising and falling edge occur in the same UI (a valid TdiPW).
6. DQ minimum input pulse width defined at the $V_{CENTDQ,midpoint}$.
7. DQS-to-DQ Rx mask offset is skew between DQS and DQ within a nibble (x4) or word (x8, x16 [for x16, the upper and lower bytes are treated as separate x8s]) at the SDRAM balls over process, voltage, and temperature.
8. DQ-to-DQ Rx mask offset is skew between DQs within a nibble (x4) or word (x8, x16) at the SDRAM balls for a given component over process, voltage, and temperature.
9. Input slew rate over V_{diVW} mask centered at $V_{CENTDQ,midpoint}$. Slowest DQ slew rate to fastest DQ slew rate per transition edge must be within 1.7V/ns of each other.
10. Input slew rate between V_{diVW} mask edge and $V_{IHL(AC)min}$ points.
11. Note 1 applies to the entire table.

The following figure shows the Rx mask relationship to the input timing specifications relative to system ^{t}DS and ^{t}DH. The classical definition for ^{t}DS/^{t}DH required a DQ rising and falling edges to not violate ^{t}DS and ^{t}DH relative to the DQS strobe at any time; however, with the Rx mask ^{t}DS and ^{t}DH can shift relative to the DQS strobe provided the input pulse width specification is satisfied and the Rx mask is not violated.

Micron Technology, Inc. reserves the right to change products or specifications without notice.
© 2018 Micron Technology, Inc. All rights reserved.

Figure 213: Rx Mask Relative to ^{t}DS/^{t}DH

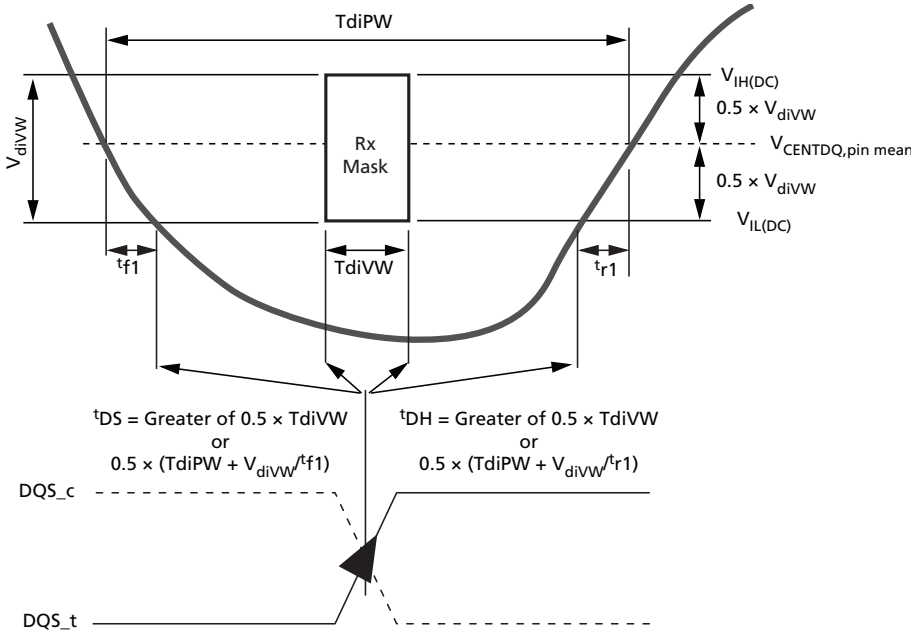

The following figure and table show an example of the worst case Rx mask required if the DQS and DQ pins do not have DRAM controller to DRAM write DQ training. The figure and table show that without DRAM write DQ training, the Rx mask would increase from 0.2UI to essentially 0.54UI. This would also be the minimum ^{t}DS and ^{t}DH required as well.

Micron Technology, Inc. reserves the right to change products or specifications without notice.
© 2018 Micron Technology, Inc. All rights reserved.

Figure 214: Rx Mask Without Write Training

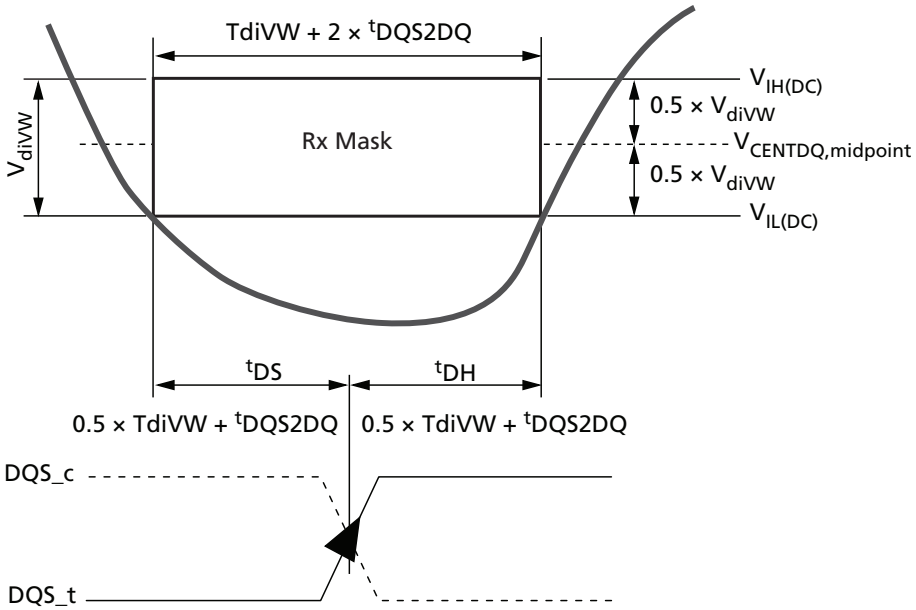

Table 93: Rx Mask and ^{t}DS/^{t}DH without Write Training

DDR4	$V_{IHL(AC)}$ (mV)	TdiPW (UI)	V_{diVW} (mV)	TdiVW (UI)	^{t}DQS2DQ (UI)	^{t}DQ2DQ (UI)	Rx Mask with Write Train (ps)	^{t}DS + ^{t}DH (ps)
1600	186	0.58	136	0.2	±0.17	0.1	125	338
1866	186	0.58	136	0.2	±0.17	0.1	107.1	289
2133	186	0.58	136	0.2	±0.17	0.1	94	253
2400	160	0.58	130	0.2	±0.17	0.1	83.3	225
2666	150	0.58	120	0.22	±0.19	0.105	82.5	225
2933	145	0.58	115	0.23	±0.22	0.115	78.4	228
3200	140	0.58	110	0.23	±0.22	0.125	71.8	209

Notes: 1. $V_{IHL(AC)}$, V_{diVW}, and $V_{ILH(DC)}$ referenced to $V_{CENTDQ,midpoint}$.

Connectivity Test (CT) Mode Input Levels

Table 94: TEN Input Levels (CMOS)

Parameter	Symbol	Min	Max	Unit	Note
TEN AC input high voltage	$V_{IH(AC)_TEN}$	0.8 × V_{DD}	V_{DD}	V	1
TEN DC input high voltage	$V_{IH(DC)_TEN}$	0.7 × V_{DD}	V_{DD}	V	
TEN DC input low voltage	$V_{IL(DC)_TEN}$	V_{SS}	0.3 × V_{DD}	V	
TEN AC input low voltage	$V_{IL(AC)_TEN}$	V_{SS}	0.2 × V_{DD}	V	2
TEN falling time	$^{t}F_TEN$	–	1 0	ns	

Micron Technology, Inc. reserves the right to change products or specifications without notice.
© 2018 Micron Technology, Inc. All rights reserved.

Table 94: TEN Input Levels (CMOS) (Continued)

Parameter	Symbol	Min	Max	Unit	Note
TEN rising time	$^{t}R_TEN$	–	1 0	ns	

Notes: 1. Overshoot should not exceed the V_{IN} values in the Absolute Maximum Ratings table.
2. Undershoot should not exceed the V_{IN} values in the Absolute Maximum Ratings table.

Figure 215: TEN Input Slew Rate Definition

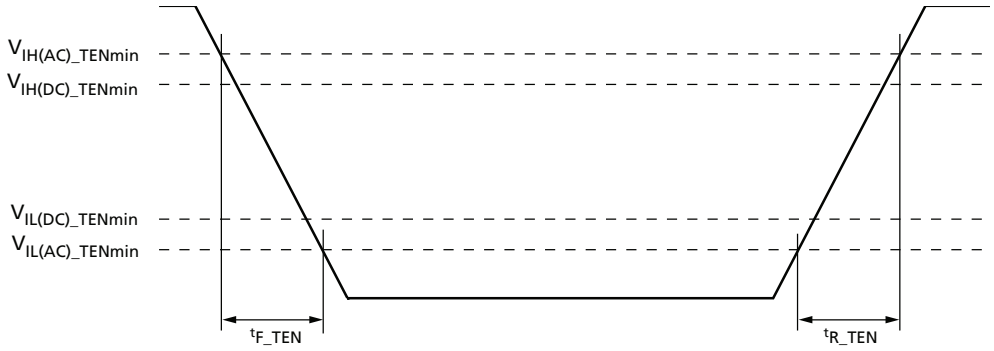

Table 95: CT Type-A Input Levels

Parameter	Symbol	Min	Max	Unit	Note
CTipA AC input high voltage	$V_{IH(AC)}$	V_{REF} + 200	V_{DD1}[1]	V	2, 3
CTipA DC input high voltage	$V_{IH(DC)}$	V_{REF} + 150	V_{DD}	V	2, 3
CTipA DC input low voltage	$V_{IL(DC)}$	V_{SS}	V_{REF} - 150	V	2, 3
CTipA AC input low voltage	$V_{IL(AC)}$	V_{SS1}[1]	V_{REF} - 200	V	2, 3
CTipA falling time	$^{t}F_CTipA$	–	5	ns	2
CTipA rising time	$^{t}R_CTipA$	–	5	ns	2

Notes: 1. Refer to Overshoot and Undershoot Specifications.
2. CT Type-A inputs: CS_n, BG[1:0], BA[1:0], A[9:0], A10/AP, A11, A12/BC_n, A13, WE_n/A14, CAS_n/A15, RAS_n/A16, A17, CKE, ACT_n, ODT, CLK_t, CLK_C, PAR.
3. $V_{REFCA} = 0.5 \times V_{DD}$.

Micron Technology, Inc. reserves the right to change products or specifications without notice.
© 2018 Micron Technology, Inc. All rights reserved.

Figure 216: CT Type-A Input Slew Rate Definition

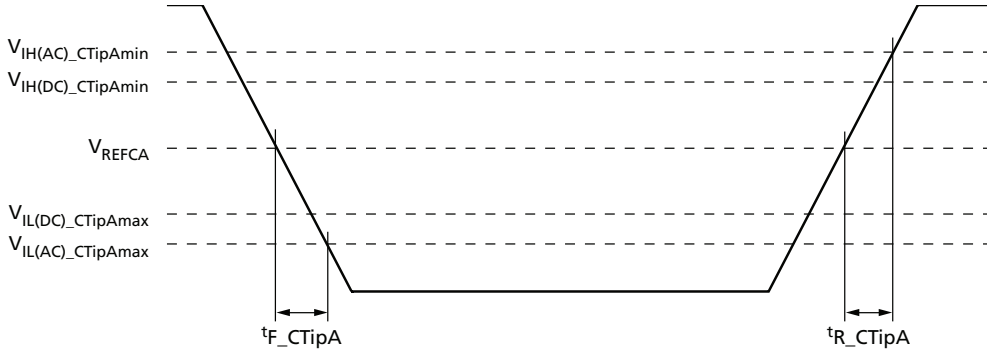

Table 96: CT Type-B Input Levels

Parameter	Symbol	Min	Max	Unit	Note
CTipB AC input high voltage	$V_{IH(AC)}$	V_{REF} + 300	V_{DD1} [1]	V	2, 3
CTipB DC input high voltage	$V_{IH(DC)}$	V_{REF} + 200	V_{DD}	V	2, 3
CTipB DC input low voltage	$V_{IL(DC)}$	V_{SS}	V_{REF} - 200	V	2, 3
CTipB AC input low voltage	$V_{IL(AC)}$	V_{SS1} [1]	V_{REF} - 300	V	2, 3
CTipB falling time	$^{t}F_{CTipB}$	–	5	ns	2
CTipB rising time	$^{t}R_{CTipB}$	–	5	ns	2

Notes: 1. Refer to Overshoot and Undershoot Specifications.
2. CT Type-B inputs: DML_n/DBIL_n, DMU_n/DBIU_n and DM_n/DBI_n.
3. V_{REFDQ} should be 0.5 × V_{DD}

Figure 217: CT Type-B Input Slew Rate Definition

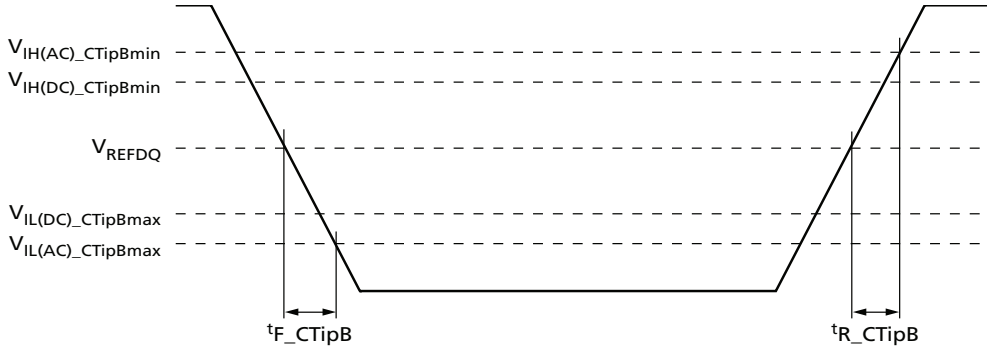

Table 97: CT Type-C Input Levels (CMOS)

Parameter	Symbol	Min	Max	Unit	Note
CTipC AC input high voltage	$V_{IH(AC)_CTipC}$	0.8 × V_{DD}	V_{DD} [1]	V	2
CTipC DC input high voltage	$V_{IH(DC)_CTipC}$	0.7 × V_{DD}	V_{DD}	V	2
CTipC DC input low voltage	$V_{IL(DC)_CTipC}$	V_{SS}	0.3 × V_{DD}	V	2
CTipC AC input low voltage	$V_{IL(AC)_CTipC}$	V_{SS} [1]	0.2 × V_{DD}	V	2

Micron Technology, Inc. reserves the right to change products or specifications without notice.
© 2018 Micron Technology, Inc. All rights reserved.

Table 97: CT Type-C Input Levels (CMOS) (Continued)

Parameter	Symbol	Min	Max	Unit	Note
CTipC falling time	$^{t}F_CTipC$	–	1 0	ns	2
CTipC rising time	$^{t}R_CTipC$	–	1 0	ns	2

Notes: 1. Refer to Overshoot and Undershoot Specifications.
2. CT Type-C inputs: Alert_n.

Figure 218: CT Type-C Input Slew Rate Definition

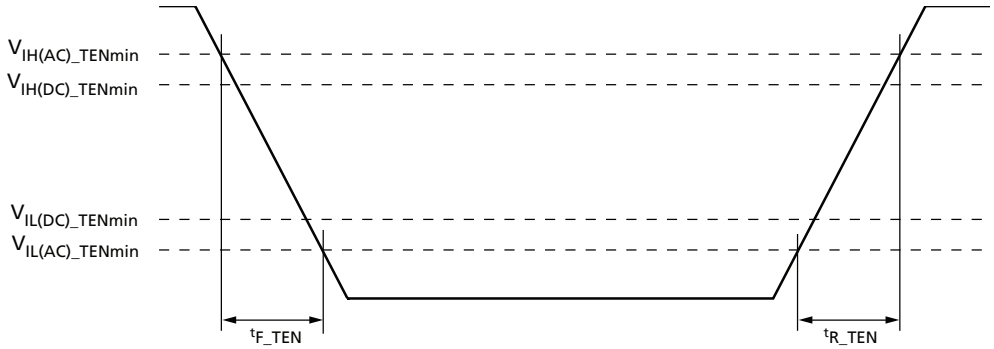

Table 98: CT Type-D Input Levels

Parameter	Symbol	Min	Max	Unit	Note
CTipD AC input high voltage	$V_{IH(AC)_CTipD}$	0.8 × V_{DD}	V_{DD}	V	4
CTipD DC input high voltage	$V_{IH(DC)_CTipD}$	0.7 × V_{DD}	V_{DD}	V	2
CTipD DC input low voltage	$V_{IL(DC)_CTipD}$	V_{SS}	0.3 × V_{DD}	V	1
CTipD AC input low voltage	$V_{IL(AC)_CTipD}$	V_{SS}	0.2 × V_{DD}	V	5
Rising time	$^{t}R_RESET$	–	1	µs	3
RESET pulse width - after power-up	$^{t}PW_RESET_S$	1	–	µs	
RESET pulse width - during power-up	$^{t}PW_RESET_L$	200	–	µs	

Notes: 1. After RESET_n is registered LOW, the RESET_n level must be maintained below $V_{IL(DC)_RESET}$ during $^{t}PW_RESET$, otherwise, the DRAM may not be reset.
2. After RESET_n is registered HIGH, the RESET_n level must be maintained above $V_{IH(DC)_RESET}$, otherwise, operation will be uncertain until it is reset by asserting RESET_n signal LOW.
3. Slope reversal (ring-back) during this level transition from LOW to HIGH should be mitigated as much as possible.
4. Overshoot should not exceed the V_{IN} values in the Absolute Maximum Ratings table.
5. Undershoot should not exceed the V_{IN} values in the Absolute Maximum Ratings table.
6. CT Type-D inputs: RESET_n; same requirements as in normal mode.

Micron Technology, Inc. reserves the right to change products or specifications without notice.
© 2018 Micron Technology, Inc. All rights reserved.

Figure 219: CT Type-D Input Slew Rate Definition

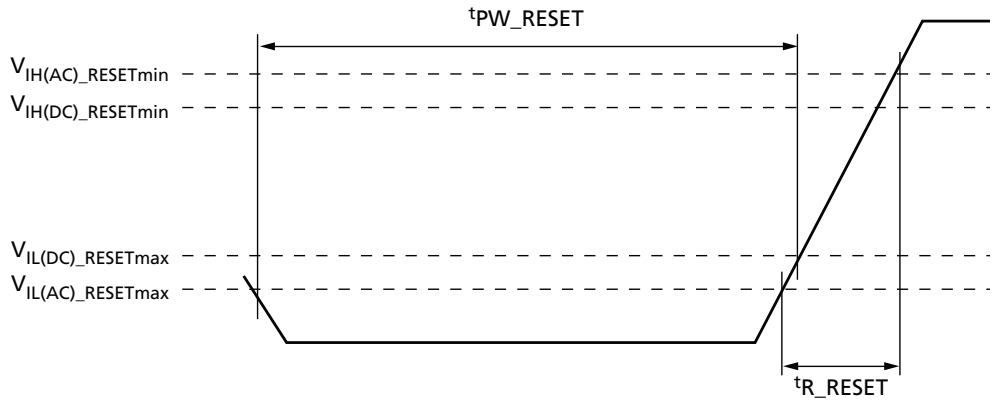

Electrical Characteristics – AC and DC Differential Input Measurement Levels

Differential Inputs

Figure 220: Differential AC Swing and "Time Exceeding AC-Level" tDVAC

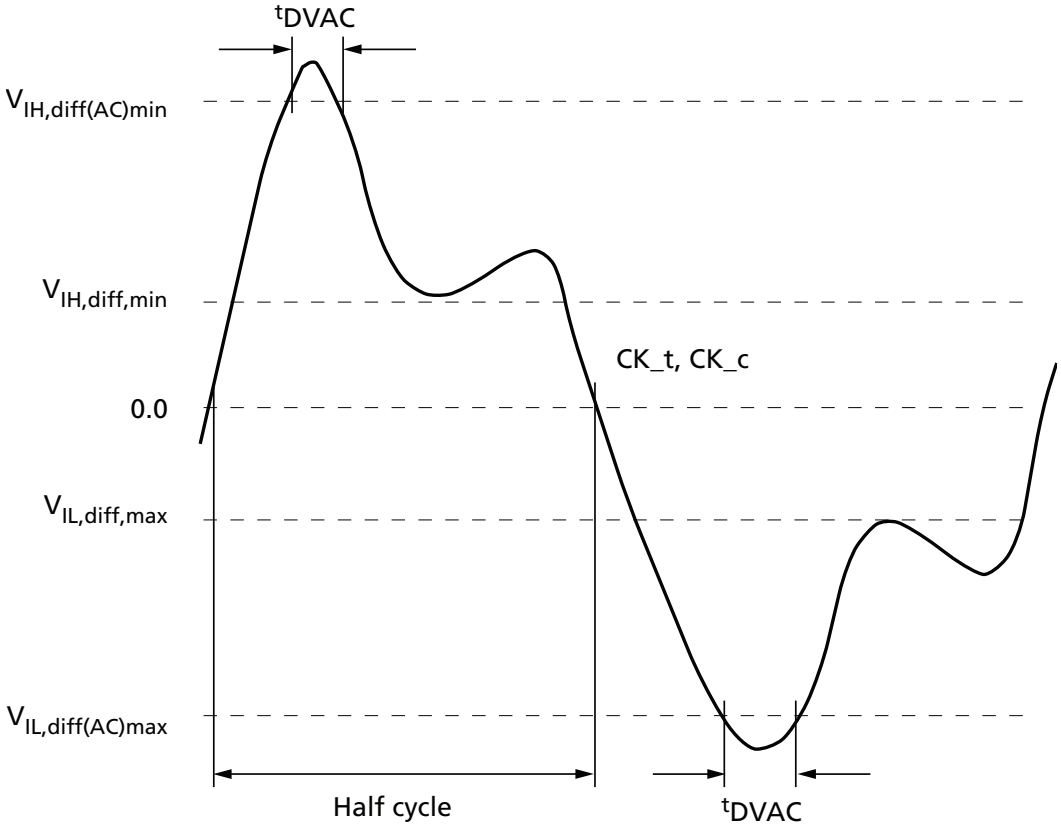

Notes: 1. Differential signal rising edge from $V_{IL,diff,max}$ to $V_{IH,diff(AC)min}$ must be monotonic slope.

Micron Technology, Inc. reserves the right to change products or specifications without notice.
© 2018 Micron Technology, Inc. All rights reserved.

2. Differential signal falling edge from $_{IH,diff,min}$ to $V_{IL,diff(AC)max}$ must be monotonic slope.

Table 99: Differential Input Swing Requirements for CK_t, CK_c

Parameter	Symbol	DDR4-1600 / 1866 / 2133		DDR4-2400 / 2666		DDR4-2933		DDR4-3200		Unit	Notes
		Min	Max	Min	Max	Min	Max	Min	Max		
Differential input high	V_{IHdiff}	150	Note 3	135	Note 3	125	Note 3	110	Note 3	mV	1
Differential input low	V_{ILdiff}	Note 3	–150	Note 3	-135	Note 3	-125	Note 3	-110	mV	1
Differential input high (AC)	$V_{IH-diff(AC)}$	2 × ($V_{IH(AC)}$ - V_{REF})	Note 3	2 × ($V_{IH(AC)}$ - V_{REF})	Note 3	2 × ($V_{IH(AC)}$ - V_{REF})	Note 3	2 × ($V_{IH(AC)}$ - V_{REF})	Note 3	V	2
Differential input low (AC)	$V_{IL-diff(AC)}$	Note 3	2 × ($V_{IL(AC)}$ - V_{REF})	Note 3	2 × ($V_{IL(AC)}$ - V_{REF})	Note 3	2 × ($V_{IL(AC)}$ - V_{REF})	Note 3	2 × ($V_{IL(AC)}$ - V_{REF})	V	2

Notes: 1. Used to define a differential signal slew-rate.
2. For CK_t, CK_c use $V_{IH(AC)}$ and $V_{IL(AC)}$ of ADD/CMD and V_{REFCA}.
3. These values are not defined; however, the differential signals (CK_t, CK_c) need to be within the respective limits, $V_{IH(DC)max}$ and $V_{IL(DC)min}$ for single-ended signals as well as the limitations for overshoot and undershoot.

Table 100: Minimum Time AC Time ^{t}DVAC for CK

Slew Rate (V/ns)	^{t}DVAC (ps) at $\lvert V_{IH,diff(AC)}$ to $V_{IL,diff(AC)}\rvert$	
	200mV	TBDmV
>4.0	120	TBD
4.0	115	TBD
3.0	110	TBD
2.0	105	TBD
1.9	100	TBD
1.6	95	TBD
1.4	90	TBD
1.2	85	TBD
1.0	80	TBD
<1.0	80	TBD

Notes: 1. Below $V_{IL(AC)}$.

Single-Ended Requirements for CK Differential Signals

Each individual component of a differential signal (CK_t, CK_c) has to comply with certain requirements for single-ended signals. CK_t and CK_c have to reach approximately $V_{SEHmin}/V_{SEL,max}$, which are approximately equal to the AC levels $V_{IH(AC)}$ and $V_{IL(AC)}$ for ADD/CMD signals in every half-cycle. The applicable AC levels for ADD/CMD might differ per speed-bin, and so on. For example, if a value other than 100mV is used for ADD/CMD $V_{IH(AC)}$ and $V_{IL(AC)}$ signals, then these AC levels also apply for the single-ended signals CK_t and CK_c.

Micron Technology, Inc. reserves the right to change products or specifications without notice.
© 2018 Micron Technology, Inc. All rights reserved.

While ADD/CMD signal requirements are with respect to V_{REFCA}, the single-ended components of differential signals have a requirement with respect to $V_{DD}/2$; this is nominally the same. The transition of single-ended signals through the AC levels is used to measure setup time. For single-ended components of differential signals the requirement to reach $V_{SEL,max}/V_{SEH,min}$ has no bearing on timing, but adds a restriction on the common mode characteristics of these signals.

Figure 221: Single-Ended Requirements for CK

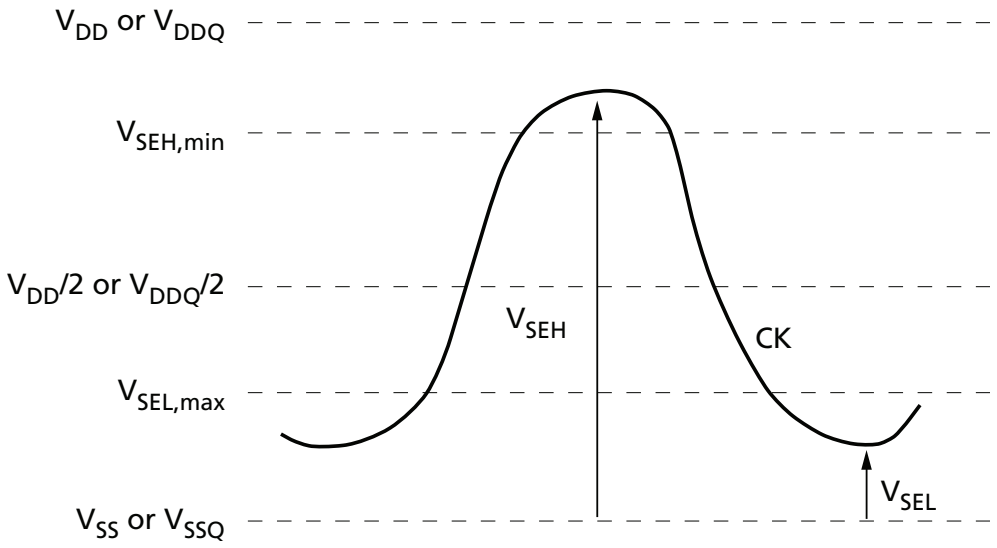

Table 101: Single-Ended Requirements for CK

Parameter	Symbol	DDR4-1600 / 1866 / 2133		DDR4-2400 / 2666		DDR4-2933 / 3200		Unit	Notes
		Min	Max	Min	Max	Min	Max		
Single-ended high level for CK_t, CK_c	V_{SEH}	$V_{DD}/2$ + 0.100	Note 3	$V_{DD}/2$ + 0.095	Note 3	$V_{DD}/2$ + 0.085	Note 3	V	1, 2
Single-ended low level for CK_t, CK_c	V_{SEL}	Note 3	$V_{DD}/2$ - 0.100	Note 3	$V_{DD}/2$ - 0.095	Note 3	$V_{DD}/2$ - 0.085	V	1, 2

Notes: 1. For CK_t, CK_c use $V_{IH(AC)}$ and $V_{IL(AC)}$ of ADD/CMD and V_{REFCA}.
2. ADDR/CMD $V_{IH(AC)}$ and $V_{IL(AC)}$ based on V_{REFCA}.
3. These values are not defined; however, the differential signal (CK_t, CK_c) need to be within the respective limits, $V_{IH(DC)max}$ and $V_{IL(DC)min}$ for single-ended signals as well as the limitations for overshoot and undershoot.

Slew Rate Definitions for CK Differential Input Signals

Table 102: CK Differential Input Slew Rate Definition

Description	Measured		Defined by
	From	To	
Differential input slew rate for rising edge	$V_{IL,diff,max}$	$V_{IH,diff,min}$	$\lvert V_{IH,diff,min} - V_{IL,diff,max}\rvert / \Delta TR_{diff}$
Differential input slew rate for falling edge	$V_{IH,diff,min}$	$V_{IL,diff,max}$	$\lvert V_{IH,diff,min} - V_{IL,diff,max}\rvert / \Delta TF_{diff}$

Notes: 1. The differential signal CK_t, CK_c must be monotonic between these thresholds.

Micron Technology, Inc. reserves the right to change products or specifications without notice.
© 2018 Micron Technology, Inc. All rights reserved.

Figure 222: Differential Input Slew Rate Definition for CK_t, CK_c

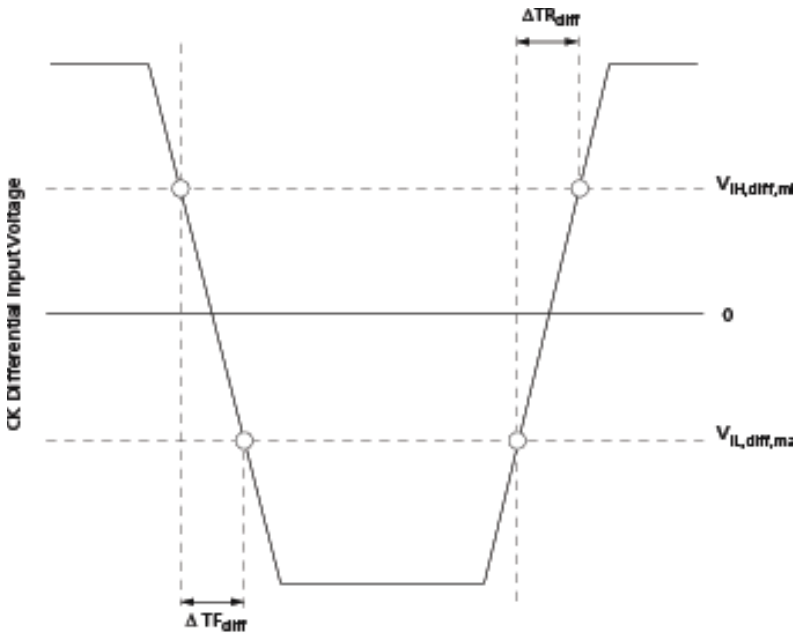

CK Differential Input Cross Point Voltage

To guarantee tight setup and hold times as well as output skew parameters with respect to clock and strobe, each cross point voltage of differential input signal CK_t, CK_c must meet the requirements shown below. The differential input cross point voltage $V_{IX(CK)}$ is measured from the actual cross point of true and complement signals to the midlevel between V_{DD} and V_{SS}.

Micron Technology, Inc. reserves the right to change products or specifications without notice.
© 2018 Micron Technology, Inc. All rights reserved.

Figure 223: $V_{IX(CK)}$ Definition

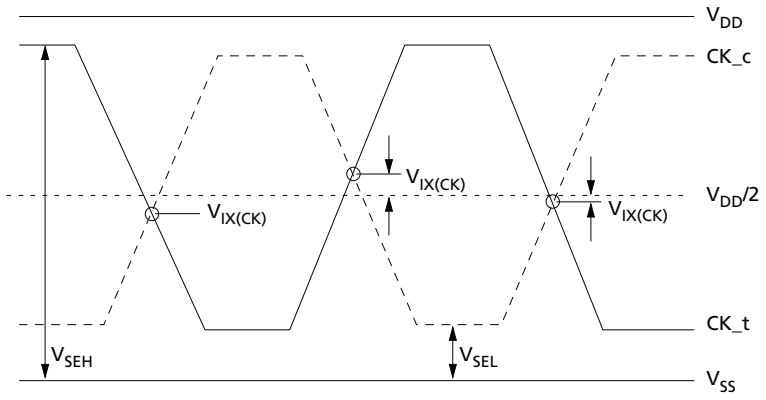

Table 103: Cross Point Voltage For CK Differential Input Signals at DDR4-1600 through DDR4-2400

Parameter	Sym	Input Level	DDR4-1600, 1866, 2133, 2400	
			Min	Max
Differential input cross point voltage relative to $V_{DD}/2$ for CK_t, CK_c	$V_{IX(CK)}$	$V_{SEH} > V_{DD}/2 + 145mV$	N/A	120mV
		$V_{DD}/2 + 100mV \le V_{SEH} \le V_{DD}/2 + 145mV$	N/A	$(V_{SEH} - V_{DD}/2) - 25mV$
		$V_{DD}/2 - 145mV \le V_{SEL} \le V_{DD}/2 - 100mV$	$-(V_{DD}/2 - V_{SEL}) + 25mV$	N/A
		$V_{SEL} < V_{DD}/2 - 145mV$	–120mV	N/A

Table 104: Cross Point Voltage For CK Differential Input Signals at DDR4-2666 through DDR4-3200

Parameter	Sym	Input Level	DDR4-2666, 2933, 3200	
			Min	Max
Differential input cross point voltage relative to $V_{DD}/2$ for CK_t, CK_c	$V_{IX(CK)}$	$V_{SEH} > V_{DD}/2 + 145mV$	N/A	110mV
		$V_{DD}/2 + 90mV \le V_{SEH} \le V_{DD}/2 + 145mV$	N/A	$(V_{SEH} - V_{DD}/2) - 30mV$
		$V_{DD}/2 - 145mV \le V_{SEL} \le V_{DD}/2 - 90mV$	$-(V_{DD}/2 - V_{SEL}) + 30mV$	N/A
		$V_{SEL} < V_{DD}/2 - 145mV$	–110mV	N/A

Micron Technology, Inc. reserves the right to change products or specifications without notice.
© 2018 Micron Technology, Inc. All rights reserved.

DQS Differential Input Signal Definition and Swing Requirements

Figure 224: Differential Input Signal Definition for DQS_t, DQS_c

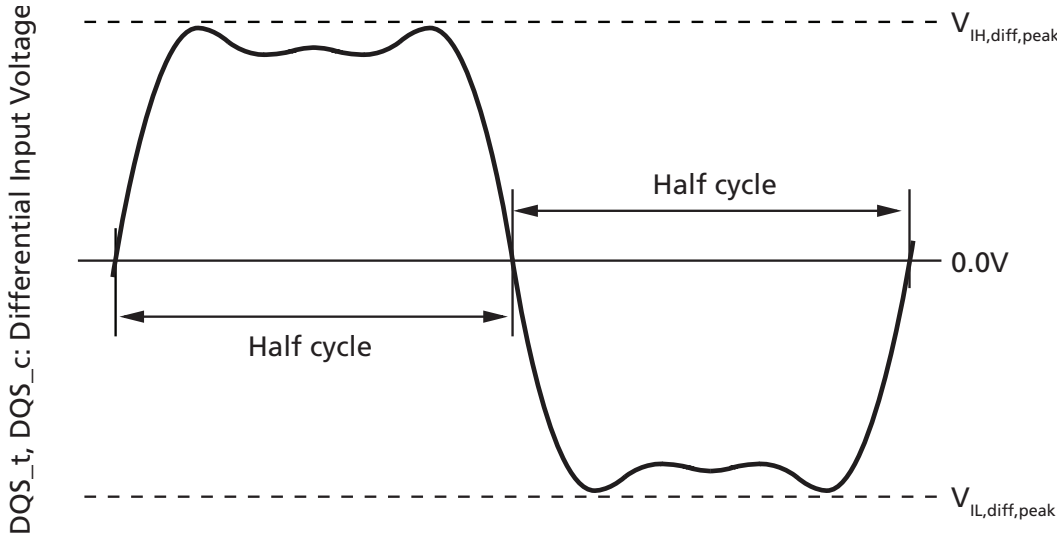

Table 105: DDR4-1600 through DDR4-2400 Differential Input Swing Requirements for DQS_t, DQS_c

Parameter	Symbol	DDR4-1600, 1866, 2133		DDR4-2400		Unit	Notes
		Min	Max	Min	Max		
Peak differential input high voltage	$V_{IH,diff,peak}$	186	V_{DDQ}	160	V_{DDQ}	mV	1, 2
Peak differential input low voltage	$V_{IL,diff,peak}$	V_{SSQ}	–186	V_{SSQ}	–160	mV	1, 2

Notes: 1. Minimum and maximum limits are relative to single-ended portion and can be exceeded within allowed overshoot and undershoot limits.
2. Minimum value point is used to determine differential signal slew-rate.

Table 106: DDR4-2633 through DDR4-3200 Differential Input Swing Requirements for DQS_t, DQS_c

Parameter	Symbol	DDR4-2666		DDR4-2933		DDR4-3200		Unit	Notes
		Min	Max	Min	Max	Min	Max		
Peak differential input high voltage	$V_{IH,diff,peak}$	150	V_{DDQ}	145	V_{DDQ}	140	V_{DDQ}	mV	1, 2
Peak differential input low voltage	$V_{IL,diff,peak}$	V_{SSQ}	–150	V_{SSQ}	–145	V_{SSQ}	–140	mV	1, 2

Notes: 1. Minimum and maximum limits are relative to single-ended portion and can be exceeded within allowed overshoot and undershoot limits.
2. Minimum value point is used to determine differential signal slew-rate.

The peak voltage of the DQS signals are calculated using the following equations: $V_{IH,dif,Peak}$ voltage = MAX(f_t)
$V_{IL,dif,Peak}$ voltage = MIN(f_t)
(f_t) = DQS_t, DQS_c.

The MAX(f(t)) or MIN(f(t)) used to determine the midpoint from which to reference the ±35% window of the exempt non-monotonic signaling shall be the smallest peak voltage observed in all UIs.

Micron Technology, Inc. reserves the right to change products or specifications without notice.
© 2018 Micron Technology, Inc. All rights reserved.

Figure 225: DQS_t, DQS_c Input Peak Voltage Calculation and Range of Exempt non-Monotonic Signaling

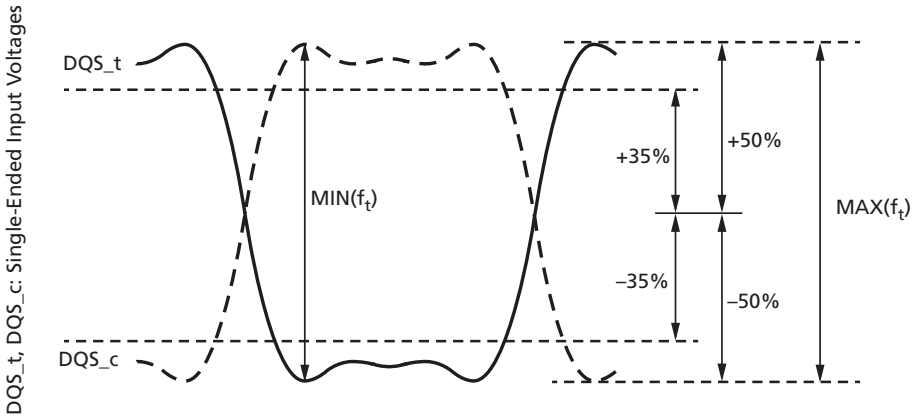

Micron Technology, Inc. reserves the right to change products or specifications without notice.
© 2018 Micron Technology, Inc. All rights reserved.

DQS Differential Input Cross Point Voltage

To achieve tight RxMask input requirements as well as output skew parameters with respect to strobe, the cross point voltage of differential input signals (DQS_t, DQS_c) must meet $V_{IX_DQS,ratio}$ in the table below. The differential input cross point voltage V_{IX_DQS} ($V_{IX_DQS_FR}$ and $V_{IX_DQS_RF}$) is measured from the actual cross point of DQS_t, DQS_c relative to the $V_{DQS,mid}$ of the DQS_t and DQS_c signals.

$V_{DQS,mid}$ is the midpoint of the minimum levels achieved by the transitioning DQS_t and DQS_c signals, and noted by V_{DQS_trans}. V_{DQS_trans} is the difference between the lowest horizontal tangent above $V_{DQS,mid}$ of the transitioning DQS signals and the highest horizontal tangent below $V_{DQS,mid}$ of the transitioning DQS signals. A non-monotonic transitioning signal's ledge is exempt or not used in determination of a horizontal tangent provided the said ledge occurs within ±35% of the midpoint of either $V_{IH.DIFF.Peak}$ voltage (DQS_t rising) or $V_{IL.DIFF.Peak}$ voltage (DQS_c rising), as shown in the figure below.

A secondary horizontal tangent resulting from a ring-back transition is also exempt in determination of a horizontal tangent. That is, a falling transition's horizontal tangent is derived from its negative slope to zero slope transition (point A in the figure below), and a ring-back's horizontal tangent is derived from its positive slope to zero slope transition (point B in the figure below) and is not a valid horizontal tangent; a rising transition's horizontal tangent is derived from its positive slope to zero slope transition (point C in the figure below), and a ring-back's horizontal tangent derived from its negative slope to zero slope transition (point D in the figure below) and is not a valid horizontal tangent.

Figure 226: V_{IXDQS} Definition

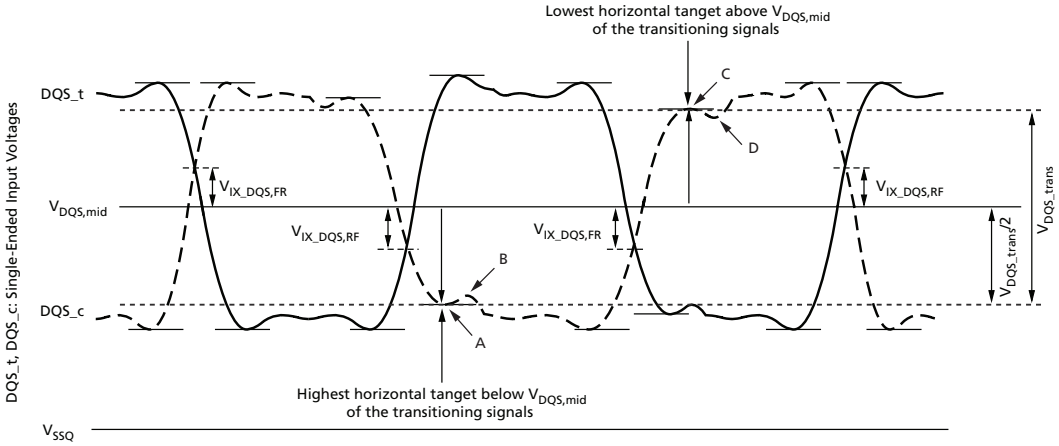

Table 107: Cross Point Voltage For Differential Input Signals DQS

Parameter	Symbol	DDR4-1600, 1866, 2133, 2400, 2666, 2933, 3200		Unit	Notes
		Min	Max		
DQS_t and DQS_c crossing relative to the midpoint of the DQS_t and DQS_c signal swings	$V_{IX_DQS,ratio}$	–	25	%	1, 2
$V_{DQS,mid}$ to $V_{cent(midpoint)}$ offset	$V_{DQS,mid_to_V\text{-}cent}$	–	Note 3	mV	2

Micron Technology, Inc. reserves the right to change products or specifications without notice.
© 2018 Micron Technology, Inc. All rights reserved.

Notes: 1. $V_{IX_DQS,ratio}$ is DQS V_{IX} crossing ($V_{IX_DQS,FR}$ or $V_{IX_DQS,RF}$) divided by V_{DQS_trans}. V_{DQS_trans} is the difference between the lowest horizontal tangent above $V_{DQS,mid}$d of the transitioning DQS signals and the highest horizontal tangent below $V_{DQS,mid}$ of the transitioning DQS signals.
2. $V_{DQS,mid}$ will be similar to the V_{REFDQ} internal setting value ($V_{cent(midpoint)}$ offset) obtained during V_{REF} Training if the DQS and DQs drivers and paths are matched.
3. The maximum limit shall not exceed the smaller of $V_{IH,diff,DQS}$ minimum limit or 50mV.

Slew Rate Definitions for DQS Differential Input Signals

Table 108: DQS Differential Input Slew Rate Definition

Description	Measured		Defined by
	From	To	
Differential input slew rate for rising edge	$V_{IL,diff,DQS}$	$V_{IH,diff,DQS}$	$\lvert V_{IH,diff,DQS} - V_{IL,diff,DQS}\rvert / \Delta TR_{diff}$
Differential input slew rate for falling edge	$V_{IH,diff,DQS}$	$V_{IL,diff,DQS}$	$\lvert V_{IHdiffDQS} - V_{IL,diff,DQS}\rvert / \Delta TF_{diff}$

Notes: 1. The differential signal DQS_t, DQS_c must be monotonic between these thresholds.

Figure 227: Differential Input Slew Rate and Input Level Definition for DQS_t, DQS_c

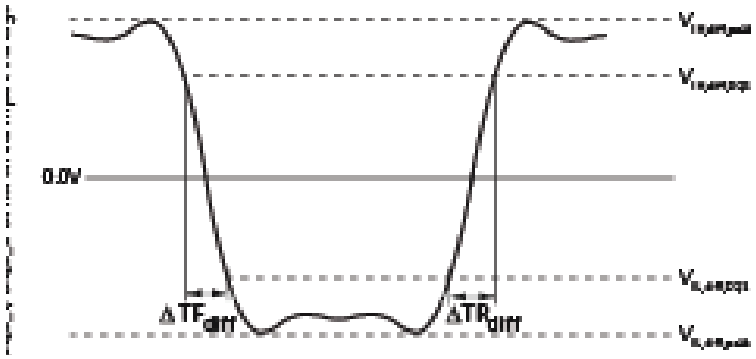

Table 109: DDR4-1600 through DDR4-2400 Differential Input Slew Rate and Input Levels for DQS_t, DQS_c

Parameter	Symbol	DDR4-1600, 1866, 2133		DDR4-2400		Unit	Notes
		Min	Max	Min	Max		
Peak differential input high voltage	$V_{IH,diff,peak}$	186	V_{DDQ}	160	V_{DDQ}	mV	1
Differential input high voltage	$V_{IH,diff,DQS}$	136	–	130	–	mV	2, 3
Differential input low voltage	$V_{IL,diff,DQS}$	–	–136	–	–130	mV	2, 3
Peak differential input low voltage	$V_{IL,diff,peak}$	$-V_{DDQ}$	–186	$-V_{DDQ}$	–160	mV	1
DQS differential input slew rate	SRIdiff	3.0	18	3.0	18	V/ns	4, 5

Notes: 1. Minimum and maximum limits are relative to single-ended portion and can be exceeded within allowed overshoot and undershoot limits.
2. Differential signal rising edge from $V_{IL,diff,DQS}$ to $V_{IH,diff,DQS}$ must be monotonic slope.
3. Differential signal falling edge from $V_{IH,diff,DQS}$ to $V_{IL,diff,DQS}$ must be monotonic slope.
4. Differential input slew rate for rising edge from $V_{IL,diff,DQS}$ to $V_{IH,diff,DQS}$ is defined by $\lvert V_{IL,diff,min} - V_{IH,diff,max}\rvert / \Delta TR_{diff}$.

Micron Technology, Inc. reserves the right to change products or specifications without notice.
© 2018 Micron Technology, Inc. All rights reserved.

5. Differential input slew rate for falling edge from $V_{IH,diff,DQS}$ to $V_{IL,diff,DQS}$ is defined by $|V_{IL,diff,min} - V_{IH,diff,max}|/\Delta TF_{diff}$.

Table 110: DDR4-2666 through DDR4-3200 Differential Input Slew Rate and Input Levels for DQS_t, DQS_c

Parameter	Symbol	DDR4-2666		DDR4-2933		DDR4-3200		Unit	Notes
		Min	Max	Min	Max	Min	Max		
Peak differential input high voltage	$V_{IH,diff,peak}$	150	V_{DDQ}	145	V_{DDQ}	140	V_{DDQ}	mV	1
Differential input high voltage	$V_{IH,diff,DQS}$	130	–	115	–	110	–	mV	2, 3
Differential input low voltage	$V_{IL,diff,DQS}$	–	–130	–	–115	–	–110	mV	2, 3
Peak differential input low voltage	$V_{IL,diff,peak}$	V_{SSQ}	–150	V_{SSQ}	–145	V_{SSQ}	–140	mV	1
DQS differential input slew rate	SRIdiff	2.5	18	2.5	18	2.5	18	V/ns	4, 5

Notes: 1. Minimum and maximum limits are relative to single-ended portion and can be exceeded within allowed overshoot and undershoot limits.
2. Differential signal rising edge from $V_{IL,diff,DQS}$ to $V_{IH,diff,DQS}$ must be monotonic slope.
3. Differential signal falling edge from $V_{IH,diff,DQS}$ to $V_{IL,diff,DQS}$ must be monotonic slope.
4. Differential input slew rate for rising edge from $V_{IL,diff,DQS}$ to $V_{IH,diff,DQS}$ is defined by $|V_{IL,diff,min} - V_{IH,diff,max}|/\Delta TR_{diff}$.
5. Differential input slew rate for falling edge from $V_{IH,diff,DQS}$ to $V_{IL,diff,DQS}$ is defined by $|V_{IL,diff,min} - V_{IH,diff,max}|/\Delta TF_{diff}$.

Micron Technology, Inc. reserves the right to change products or specifications without notice.
© 2018 Micron Technology, Inc. All rights reserved.

Electrical Characteristics – Overshoot and Undershoot Specifications

Address, Command, and Control Overshoot and Undershoot Specifications

Table 111: ADDR, CMD, CNTL Overshoot and Undershoot/Specifications

Description	DDR4-1600	DDR4-1866	DDR4-2133	DDR4-2400	DDR4-2666	DDR4-2933	DDR4-3200	Unit
Address and control pins (A[17:0], BG[1:0], BA[1:0], CS_n, RAS_n, CAS_n, WE_n, CKE, ODT, C2-0)								
Area A: Maximum peak amplitude above V_{DD} absolute MAX	0.06	0.06	0.06	0.06	0.06	0.06	0.06	V
Area B: Amplitude allowed between V_{DD} and V_{DD} absolute MAX	0.24	0.24	0.24	0.24	0.24	0.24	0.24	V
Area C: Maximum peak amplitude allowed for undershoot below V_{SS}	0.30	0.30	0.30	0.30	0.30	0.30	0.30	V
Area A maximum overshoot area per 1^tCK	0.0083	0.0071	0.0062	0.0055	0.0055	0.0055	0.0055	V/ns
Area B maximum overshoot area per 1^tCK	0.2550	0.2185	0.1914	0.1699	0.1699	0.1699	0.1699	V/ns
Area C maximum undershoot area per 1^tCK	0.2644	0.2265	0.1984	0.1762	0.1762	0.1762	0.1762	V/ns

Figure 228: ADDR, CMD, CNTL Overshoot and Undershoot Definition

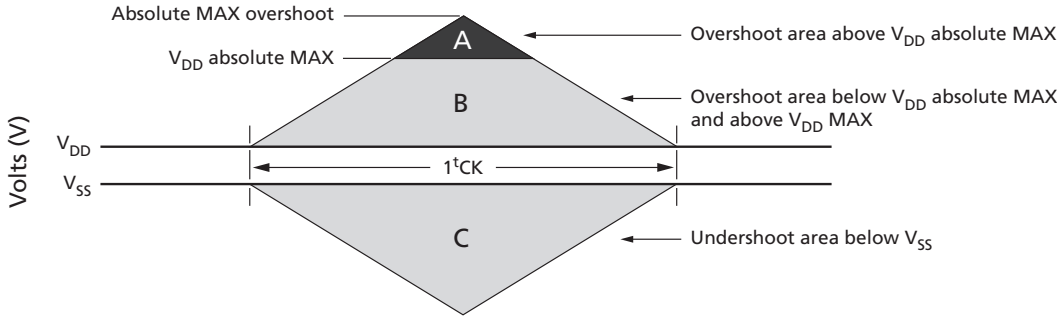

Micron Technology, Inc. reserves the right to change products or specifications without notice.
© 2018 Micron Technology, Inc. All rights reserved.

Clock Overshoot and Undershoot Specifications

Table 112: CK Overshoot and Undershoot/ Specifications

Description	DDR4-1600	DDR4-1866	DDR4-2133	DDR4-2400	DDR4-2666	DDR4-2933	DDR4-3200	Unit
CLK_t, CLK_n								
Area A: Maximum peak amplitude above V_{DD} absolute MAX	0.06	0.06	0.06	0.06	0.06	0.06	0.06	V
Area B: Amplitude allowed between V_{DD} and V_{DD} absolute MAX	0.24	0.24	0.24	0.24	0.24	0.24	0.24	V
Area C: Maximum peak amplitude allowed for undershoot below V_{SS}	0.30	0.30	0.30	0.30	0.30	0.30	0.30	V
Area A maximum overshoot area per 1UI	0.0038	0.0032	0.0028	0.0025	0.0025	0.0025	0.0025	V/ns
Area B maximum overshoot area per 1UI	0.1125	0.0964	0.0844	0.0750	0.0750	0.0750	0.0750	V/ns
Area C maximum undershoot area per 1UI	0.1144	0.0980	0.0858	0.0762	0.0762	0.0762	0.0762	V/ns

Figure 229: CK Overshoot and Undershoot Definition

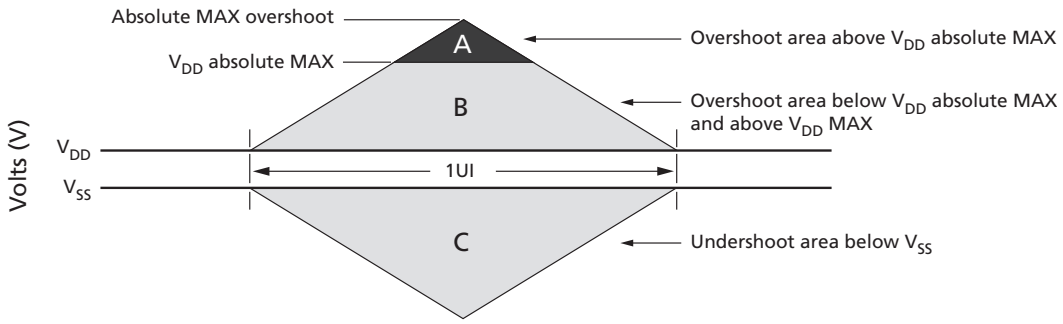

Micron Technology, Inc. reserves the right to change products or specifications without notice.
© 2018 Micron Technology, Inc. All rights reserved.

Data, Strobe, and Mask Overshoot and Undershoot Specifications

Table 113: Data, Strobe, and Mask Overshoot and Undershoot/ Specifications

Description	DDR4-1600	DDR4-1866	DDR4-2133	DDR4-2400	DDR4-2666	DDR4-2933	DDR4-3200	Unit
DQS_t, DQS_n, LDQS_t, LDQS_n, UDQS_t, UDQS_n, DQ[0:15], DM/DBI, UDM/UDBI, LDM/LDBI,								
Area A: Maximum peak amplitude above V_{DDQ} absolute MAX	0.16	0.16	0.16	0.16	0.16	0.16	0.16	V
Area B: Amplitude allowed between V_{DDQ} and V_{DDQ} absolute MAX	0.24	0.24	0.24	0.24	0.24	0.24	0.24	V
Area C: Maximum peak amplitude allowed for undershoot below V_{SSQ}	0.30	0.30	0.30	0.30	0.30	0.30	0.30	V
Area D: Maximum peak amplitude below V_{SSQ} absolute MIN	0.10	0.10	0.10	0.10	0.10	0.10	0.10	V
Area A maximum overshoot area per 1UI	0.0150	0.0129	0.0113	0.0100	0.0100	0.0100	0.0100	V/ns
Area B maximum overshoot area per 1UI	0.1050	0.0900	0.0788	0.0700	0.0700	0.0700	0.0700	V/ns
Area C maximum undershoot area per 1UI	0.1050	0.0900	0.0788	0.0700	0.0700	0.0700	0.0700	V/ns
Area D maximum undershoot area per 1UI	0.0150	0.0129	0.0113	0.0100	0.0100	0.0100	0.0100	V/ns

Figure 230: Data, Strobe, and Mask Overshoot and Undershoot Definition

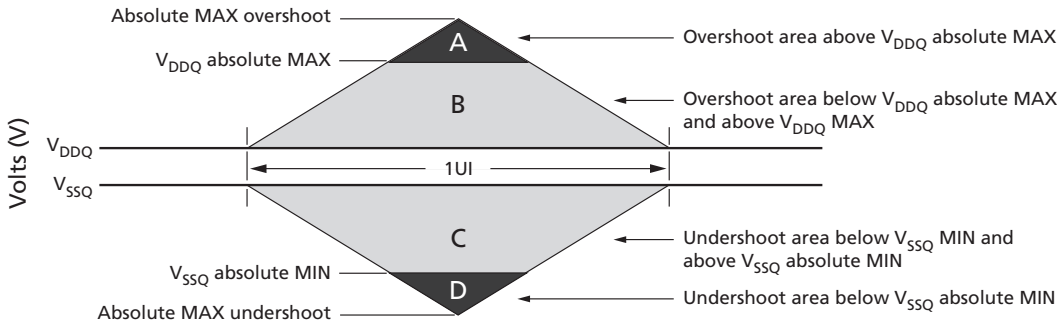

Electrical Characteristics – AC and DC Output Measurement Levels

Single-Ended Outputs

Table 114: Single-Ended Output Levels

Parameter	Symbol	DDR4-1600 to DDR4-3200	Unit
DC output high measurement level (for IV curve linearity)	$V_{OH(DC)}$	1.1 × V_{DDQ}	V
DC output mid measurement level (for IV curve linearity)	$V_{OM(DC)}$	0.8 × V_{DDQ}	V
DC output low measurement level (for IV curve linearity)	$V_{OL(DC)}$	0.5 × V_{DDQ}	V
AC output high measurement level (for output slew rate)	$V_{OH(AC)}$	(0.7 + 0.15) × V_{DDQ}	V
AC output low measurement level (for output slew rate)	$V_{OL(AC)}$	(0.7 - 0.15) × V_{DDQ}	V

Micron Technology, Inc. reserves the right to change products or specifications without notice.
© 2018 Micron Technology, Inc. All rights reserved.

Notes: 1. The swing of ±0.15 × V_{DDQ} is based on approximately 50% of the static single-ended output peak-to-peak swing with a driver impedance of $R_{ZQ}/7$ and an effective test load of 50Ω to $V_{TT} = V_{DDQ}$.

Using the same reference load used for timing measurements, output slew rate for falling and rising edges is defined and measured between $V_{OL(AC)}$ and $V_{OH(AC)}$ for single-ended signals.

Table 115: Single-Ended Output Slew Rate Definition

Description	Measured		Defined by
	From	To	
Single-ended output slew rate for rising edge	$V_{OL(AC)}$	$V_{OH(AC)}$	$[V_{OH(AC)} - V_{OL(AC)}]/\Delta TR_{se}$
Single-ended output slew rate for falling edge	$V_{OH(AC)}$	$V_{OL(AC)}$	$[V_{OH(AC)} - V_{OL(AC)}]/\Delta TF_{se}$

Figure 231: Single-ended Output Slew Rate Definition

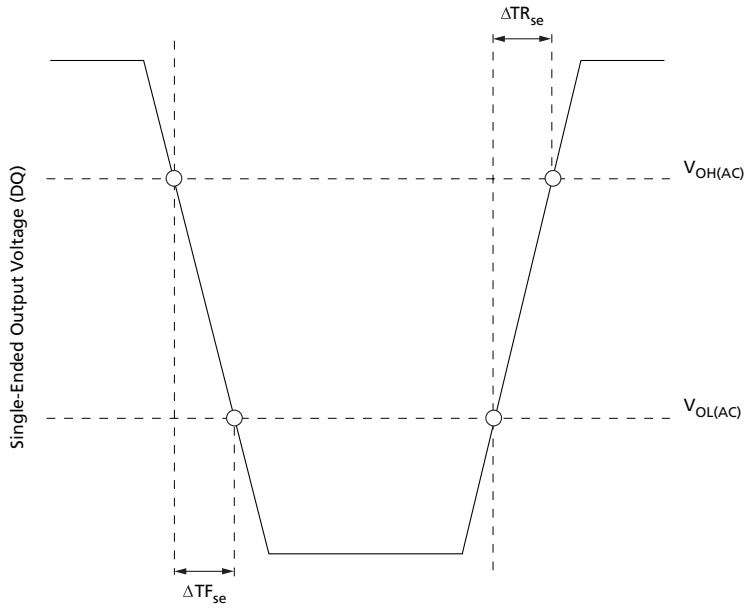

Table 116: Single-Ended Output Slew Rate

Parameter	Symbol	DDR4-1600/ 1866 / 2133 / 2400		DDR4-2666		DDR4-2933 / 3200		Unit
		Min	Max	Min	Max	Min	Max	
Single-ended output slew rate	SRQ_{se}	4	9	4	9	4	9	V/ns

Notes: 1. SR = slew rate; Q = query output; se = single-ended signals.
2. In two cases a maximum slew rate of 12V/ns applies for a single DQ signal within a byte lane:
   - Case 1 is defined for a single DQ signal within a byte lane that is switching into a certain direction (either from HIGH-to-LOW or LOW-to-HIGH) while all remaining DQ signals in the same byte lane are static (they stay at either HIGH or LOW).
   - Case 2 is defined for a single DQ signal within a byte lane that is switching into a certain direction (either from HIGH-to-LOW or LOW-to-HIGH) while all remaining DQ signals in the same byte lane are switching into the opposite direction (from LOW-to-HIGH or HIGH-to-LOW, respectively). For the remaining DQ signal switching into the opposite direction, the standard maximum limit of 9 V/ns applies.

Micron Technology, Inc. reserves the right to change products or specifications without notice.
© 2018 Micron Technology, Inc. All rights reserved.

3. For $R_{ON} = R_{ZQ}/7$.

Differential Outputs

Table 117: Differential Output Levels

Parameter	Symbol	DDR4-1600 to DDR4-3200	Unit
AC differential output high measurement level (for output slew rate)	$V_{OH,diff(AC)}$	$0.3 \times V_{DDQ}$	V
AC differential output low measurement level (for output slew rate)	$V_{OL,diff(AC)}$	$-0.3 \times V_{DDQ}$	V

Notes: 1. The swing of $\pm 0.3 \times V_{DDQ}$ is based on approximately 50% of the static single-ended output peak-to-peak swing with a driver impedance of $R_{ZQ}/7$ and an effective test load of 50Ω to $V_{TT} = V_{DDQ}$ at each differential output.

Using the same reference load used for timing measurements, output slew rate for falling and rising edges is defined and measured between $V_{OL,diff(AC)}$ and $V_{OH,diff(AC)}$ for differential signals.

Table 118: Differential Output Slew Rate Definition

Description	Measured		Defined by
	From	To	
Differential output slew rate for rising edge	$V_{OL,diff(AC)}$	$V_{OH,diff(AC)}$	$[V_{OH,diff(AC)} - V_{OL,diff(AC)}]/\Delta TR_{diff}$
Differential output slew rate for falling edge	$V_{OH,diff(AC)}$	$V_{OL,diff(AC)}$	$[V_{OH,diff(AC)} - V_{OL,diff(AC)}]/\Delta TF_{diff}$

Figure 232: Differential Output Slew Rate Definition

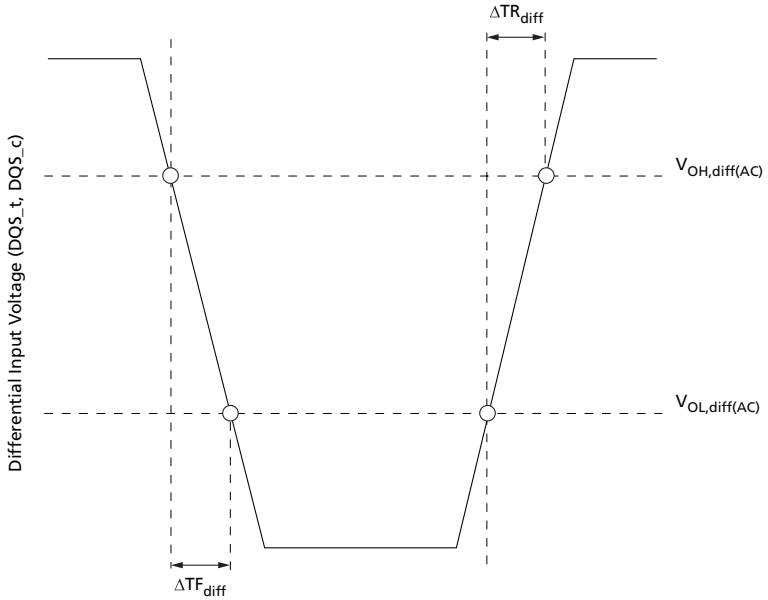

Micron Technology, Inc. reserves the right to change products or specifications without notice.
© 2018 Micron Technology, Inc. All rights reserved.

Table 119: Differential Output Slew Rate

Parameter	Symbol	DDR4-1600 / 1866 / 2133 / 2400		DDR4-2666		DDR4-2933 / 3200		Unit
		Min	Max	Min	Max	Min	Max	
Differential output slew rate	SRQ_{diff}	8	18	8	18	8	18	V/ns

Notes: 1. SR = slew rate; Q = query output; diff = differential signals.
2. For $R_{ON} = R_{ZQ}/7$.

Reference Load for AC Timing and Output Slew Rate

The effective reference load of 50Ω to $V_{TT} = V_{DDQ}$ and driver impedance of $R_{ZQ}/7$ for each output was used in defining the relevant AC timing parameters of the device as well as output slew rate measurements.

R_{ON} nominal of DQ, DQS_t and DQS_c drivers uses 34 ohms to specify the relevant AC timing parameter values of the device. The maximum DC high level of output signal = $1.0 \times V_{DDQ}$, the minimum DC low level of output signal = $\{ 34 / (34 + 50) \} \times V_{DDQ} = 0.4 \times V_{DDQ}$.

The nominal reference level of an output signal can be approximated by the following: The center of maximum DC high and minimum DC low = $\{ (1 + 0.4) / 2 \} \times V_{DDQ} = 0.7 \times V_{DDQ}$. The actual reference level of output signal might vary with driver R_{ON} and reference load tolerances. Thus, the actual reference level or midpoint of an output signal is at the widest part of the output signal's eye.

Figure 233: Reference Load For AC Timing and Output Slew Rate

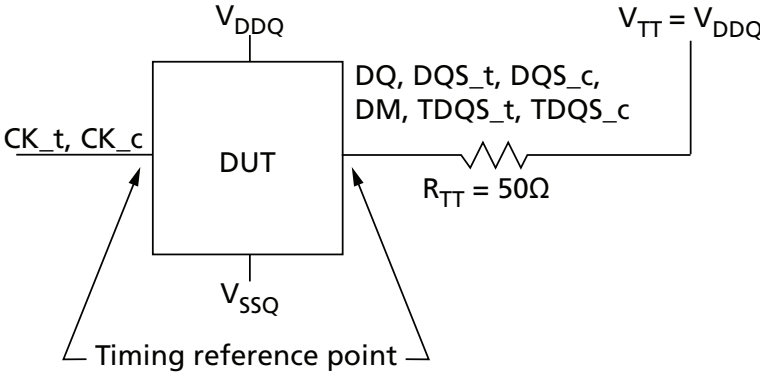

Connectivity Test Mode Output Levels

Table 120: Connectivity Test Mode Output Levels

Parameter	Symbol	DDR4-1600 to DDR4-3200	Unit
DC output high measurement level (for IV curve linearity)	$V_{OH(DC)}$	$1.1 \times V_{DDQ}$	V
DC output mid measurement level (for IV curve linearity)	$V_{OM(DC)}$	$0.8 \times V_{DDQ}$	V
DC output low measurement level (for IV curve linearity)	$V_{OL(DC)}$	$0.5 \times V_{DDQ}$	V
DC output below measurement level (for IV curve linearity)	$V_{OB(DC)}$	$0.2 \times V_{DDQ}$	V
AC output high measurement level (for output slew rate)	$V_{OH(AC)}$	$V_{TT} + (0.1 \times V_{DDQ})$	V

Micron Technology, Inc. reserves the right to change products or specifications without notice.
© 2018 Micron Technology, Inc. All rights reserved.

Table 120: Connectivity Test Mode Output Levels (Continued)

Parameter	Symbol	DDR4-1600 to DDR4-3200	Unit
AC output low measurement level (for output slew rate)	$V_{OL(AC)}$	V_{TT} - (0.1 × V_{DDQ})	V

Notes: 1. Driver impedance of $R_{ZQ}/7$ and an effective test load of 50Ω to $V_{TT} = V_{DDQ}$.

Figure 234: Connectivity Test Mode Reference Test Load

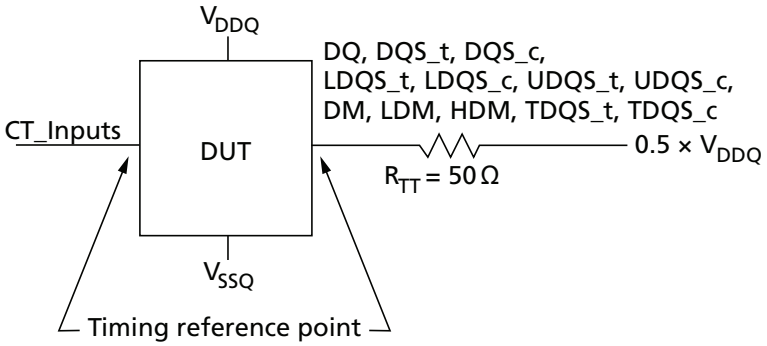

Figure 235: Connectivity Test Mode Output Slew Rate Definition

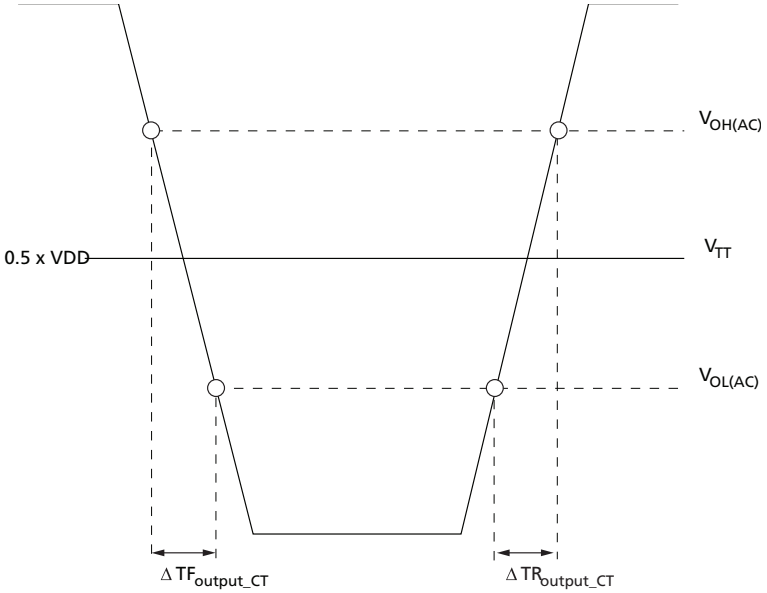

Table 121: Connectivity Test Mode Output Slew Rate

Parameter	Symbol	DDR4-1600 / 1866 / 2133 / 2400		DDR4-2666		DDR4-2933 / 3200		Unit
		Min	Max	Min	Max	Min	Max	
Output signal falling time	TF_output_CT	–	10	–	10	–	10	ns/V
Output signal rising time	TR_output_CT	–	10	–	10	–	10	ns/V

Micron Technology, Inc. reserves the right to change products or specifications without notice.
© 2018 Micron Technology, Inc. All rights reserved.

Electrical Characteristics – AC and DC Output Driver Characteristics

Connectivity Test Mode Output Driver Electrical Characteristics

The DDR4 driver supports special values during connectivity test mode. These R_{ON} values are referenced in this section. A functional representation of the output buffer is shown in the figure below.

Figure 236: Output Driver During Connectivity Test Mode

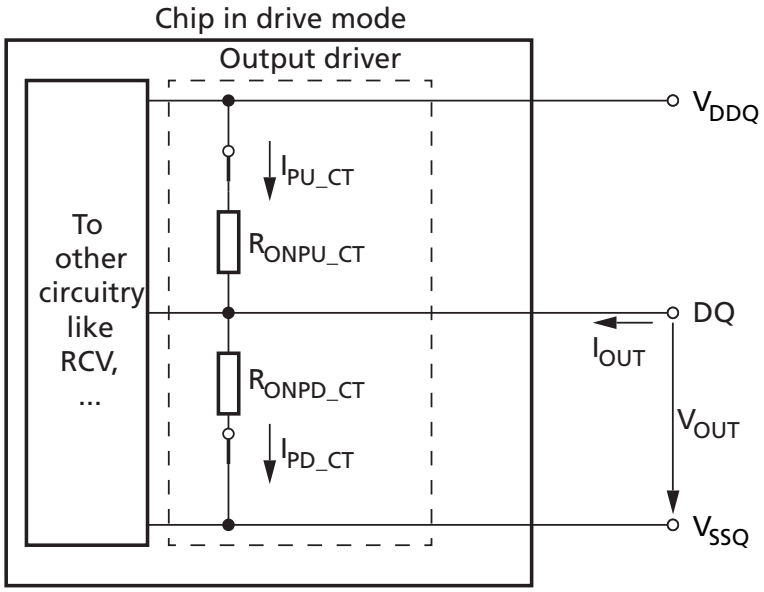

The output driver impedance, R_{ON}, is determined by the value of the external reference resistor R_{ZQ} as follows: $R_{ON} = R_{ZQ}/7$. This targets 34Ω with nominal $R_{ZQ} = 240Ω$; however, connectivity test mode uses uncalibrated drivers and only a maximum target is defined. Mismatch between pull up and pull down is undefined.

The individual pull-up and pull-down resistors (R_{ONPu_CT} and R_{ONPd_CT}) are defined as follows:

R_{ONPu_CT} when R_{ONPd_CT} is off:

$$R_{ONPU_CT} = \frac{V_{DDQ} - V_{OUT}}{|I_{OUT}|}$$

R_{ONPD_CT} when R_{ONPU_CT} is off:

$$R_{ONPD_CT} = \frac{V_{OUT}}{|I_{OUT}|}$$

Micron Technology, Inc. reserves the right to change products or specifications without notice.
© 2018 Micron Technology, Inc. All rights reserved.

Table 122: Output Driver Electrical Characteristics During Connectivity Test Mode

R_{ON,nom_CT}	Resistor	V_{OUT}	Min	Nom	Max	Unit
34Ω	R_{ONPD_CT}	$V_{OB(DC)} = 0.2 \times V_{DDQ}$	N/A	N/A	1.9	$R_{ZQ}/7$
		$V_{OL(DC)} = 0.5 \times V_{DDQ}$	N/A	N/A	2.0	$R_{ZQ}/7$
		$V_{OM(DC)} = 0.8 \times V_{DDQ}$	N/A	N/A	2.2	$R_{ZQ}/7$
		$V_{OH(DC)} = 1.1 \times V_{DDQ}$	N/A	N/A	2.5	$R_{ZQ}/7$
	R_{ONPU_CT}	$V_{OB(DC)} = 0.2 \times V_{DDQ}$	N/A	N/A	1.9	$R_{ZQ}/7$
		$V_{OL(DC)} = 0.5 \times V_{DDQ}$	N/A	N/A	2.0	$R_{ZQ}/7$
		$V_{OM(DC)} = 0.8 \times V_{DDQ}$	N/A	N/A	2.2	$R_{ZQ}/7$
		$V_{OH(DC)} = 1.1 \times V_{DDQ}$	N/A	N/A	2.5	$R_{ZQ}/7$

Notes: 1. Assumes R_{ZQ} = 240Ω; ZQ calibration not required.

Output Driver Electrical Characteristics

The DDR4 driver supports two R_{ON} values. These R_{ON} values are referred to as strong mode (low R_{ON}: 34Ω) and weak mode (high R_{ON}: 48Ω). A functional representation of the output buffer is shown in the figure below.

Figure 237: Output Driver: Definition of Voltages and Currents

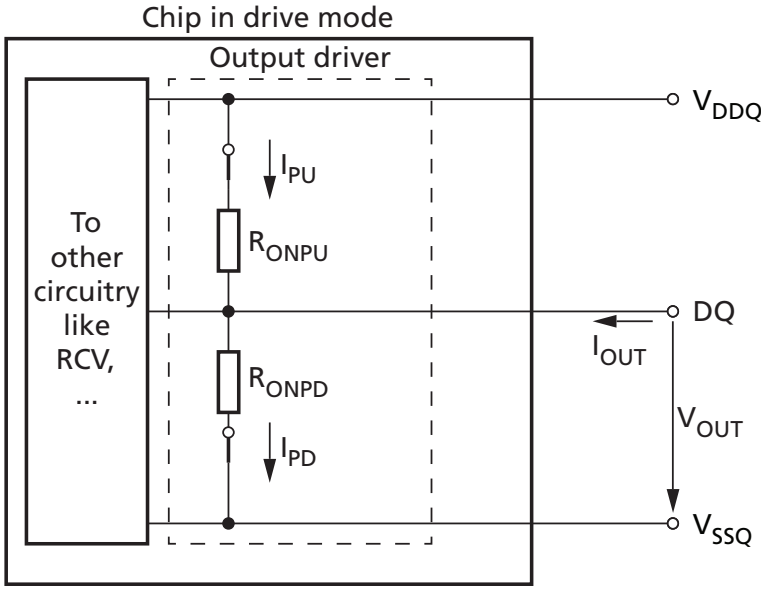

The output driver impedance, R_{ON}, is determined by the value of the external reference resistor R_{ZQ} as follows: $R_{ON(34)} = R_{ZQ}/7$, or $R_{ON(48)} = R_{ZQ}/5$. This provides either a nominal 34.3Ω ±10% or 48Ω ±10% with nominal R_{ZQ} = 240Ω.

The individual pull-up and pull-down resistors (R_{ONPu} and R_{ONPd}) are defined as follows:

R_{ONPu} when R_{ONPd} is off:

Micron Technology, Inc. reserves the right to change products or specifications without notice.
© 2018 Micron Technology, Inc. All rights reserved.

$$R_{ONPU} = \frac{V_{DDQ} - V_{OUT}}{|I_{OUT}|}$$

R_{ONPD} when R_{ONPU} is off:

$$R_{ONPD} = \frac{V_{OUT}}{|I_{OUT}|}$$

Table 123: Strong Mode (34Ω) Output Driver Electrical Characteristics

$R_{ON,nom}$	Resistor	V_{OUT}	Min	Nom	Max	Unit	Notes
34Ω	R_{ON34PD}	$V_{OL(DC)} = 0.5 \times V_{DDQ}$	0.73	1.00	1.10	$R_{ZQ}/7$	1, 2, 3
		$V_{OM(DC)} = 0.8 \times V_{DDQ}$	0.83	1.00	1.10	$R_{ZQ}/7$	1, 2, 3
		$V_{OH(DC)} = 1.1 \times V_{DDQ}$	0.83	1.00	1.25	$R_{ZQ}/7$	1, 2, 3
	R_{ON34PU}	$V_{OL(DC)} = 0.5 \times V_{DDQ}$	0.90	1.00	1.25	$R_{ZQ}/7$	1, 2, 3
		$V_{OM(DC)} = 0.8 \times V_{DDQ}$	0.90	1.00	1.10	$R_{ZQ}/7$	1, 2, 3
		$V_{OH(DC)} = 1.1 \times V_{DDQ}$	0.80	1.00	1.10	$R_{ZQ}/7$	1, 2, 3
Mismatch between pull-up and pull-down, MM_{PUPD}		$V_{OM(DC)} = 0.8 \times V_{DDQ}$	10	–	23	%	1, 2, 3, 4, 6, 7
Mismatch between DQ to DQ within byte variation pull-up, MM_{PUdd}		$V_{OM(DC)} = 0.8 \times V_{DDQ}$	–	–	10	%	1, 2, 3, 4, 5
Mismatch between DQ to DQ within byte variation pull-down, MM_{PDdd}		$V_{OM(DC)} = 0.8 \times V_{DDQ}$	-	–	10	%	1, 2, 3, 4, 6, 7

Notes:
1. The tolerance limits are specified after calibration with stable voltage and temperature. For the behavior of the tolerance limits if temperature or voltage changes after calibration, see following section on voltage and temperature sensitivity.
2. The tolerance limits are specified under the condition that $V_{DDQ} = V_{DD}$ and that $V_{SSQ} = V_{SS}$.
3. Micron recommends calibrating pull-down and pull-up output driver impedances at $0.8 \times V_{DDQ}$. Other calibration schemes may be used to achieve the linearity specification shown above; for example, calibration at $0.5 \times V_{DDQ}$ and $1.1\ V_{DDQ}$.
4. DQ-to-DQ mismatch within byte variation for a given component including DQS_t and DQS_c (characterized).
5. Measurement definition for mismatch between pull-up and pull-down, MM_{PUPD}:
   Measure both R_{ONPU} and R_{ONPD} at $0.8 \times V_{DDQ}$ separately; $R_{ON,nom}$ is the nominal R_{ON} value:
$$MM_{PUPD} = \frac{R_{ONPU} - R_{ONPD}}{R_{ON,nom}} \times 100$$
6. R_{ON} variance range ratio to R_{ON} nominal value in a given component, including DQS_t and DQS_c:
$$MM_{PUDD} = \frac{R_{ONPU,max} - R_{ONPU,min}}{R_{ON,nom}} \times 100$$
$$MM_{PDDD} = \frac{R_{ONPD,max} - R_{ONPD,min}}{R_{ON,nom}} \times 100$$
7. The lower and upper bytes of a x16 are each treated on a per byte basis.
8. The minimum values are derated by 9% when the device operates between –40°C and 0°C (T_C).

Micron Technology, Inc. reserves the right to change products or specifications without notice.
© 2018 Micron Technology, Inc. All rights reserved.

9. Assumes R_{ZQ} = 240Ω; entire operating temperature range after proper ZQ calibration.

Table 124: Weak Mode (48Ω) Output Driver Electrical Characteristics

$R_{ON,nom}$	Resistor	V_{OUT}	Min	Nom	Max	Unit	Notes
48Ω	R_{ON48PD}	$V_{OL(DC)}$ = 0.5 × V_{DDQ}	0.73	1.00	1.10	R_{ZQ}/5	1, 2, 3
		$V_{OM(DC)}$ = 0.8 × V_{DDQ}	0.83	1.00	1.10	R_{ZQ}/5	1, 2, 3
		$V_{OH(DC)}$ = 1.1 × V_{DDQ}	0.83	1.00	1.25	R_{ZQ}/5	1, 2, 3
	R_{ON48PU}	$V_{OL(DC)}$ = 0.5 × V_{DDQ}	0.90	1.00	1.25	R_{ZQ}/5	1, 2, 3
		$V_{OM(DC)}$ = 0.8 × V_{DDQ}	0.90	1.00	1.10	R_{ZQ}/5	1, 2, 3
		$V_{OH(DC)}$ = 1.1 × V_{DDQ}	0.80	1.00	1.10	R_{ZQ}/5	1, 2, 3
Mismatch between pull-up and pull-down, MM_{PUPD}		$V_{OM(DC)}$ = 0.8 × V_{DDQ}	10	–	23	%	1, 2, 3, 4, 6, 7
Mismatch between DQ to DQ within byte variation pull-up, MM_{PUdd}		$V_{OM(DC)}$ = 0.8 × V_{DDQ}	–	–	10	%	1, 2, 3, 4, 5
Mismatch between DQ to DQ within byte variation pull-down, MM_{PDdd}		$V_{OM(DC)}$ = 0.8 × V_{DDQ}	–	–	10	%	1, 2, 3, 4, 6, 7

Notes:
1. The tolerance limits are specified after calibration with stable voltage and temperature. For the behavior of the tolerance limits if temperature or voltage changes after calibration, see following section on voltage and temperature sensitivity.
2. The tolerance limits are specified under the condition that V_{DDQ} = V_{DD} and that V_{SSQ} = V_{SS}.
3. Micron recommends calibrating pull-down and pull-up output driver impedances at 0.8 × V_{DDQ}. Other calibration schemes may be used to achieve the linearity specification shown above; for example, calibration at 0.5 × V_{DDQ} and 1.1 V_{DDQ}.
4. DQ-to-DQ mismatch within byte variation for a given component including DQS_t and DQS_c (characterized).
5. Measurement definition for mismatch between pull-up and pull-down, MM_{PUPD}:
   Measure both R_{ONPU} and R_{ONPD} at 0.8 × V_{DDQ} separately; $R_{ON,nom}$ is the nominal R_{ON} value:

$$MM_{PUPD} = \frac{R_{ONPU} - R_{ONPD}}{R_{ON,nom}} \times 100$$

6. R_{ON} variance range ratio to R_{ON} nominal value in a given component, including DQS_t and DQS_c:

$$MM_{PUDD} = \frac{R_{ONPU,max} - R_{ONPU,min}}{R_{ON,nom}} \times 100$$

$$MM_{PDDD} = \frac{R_{ONPD,max} - R_{ONPD,min}}{R_{ON,nom}} \times 100$$

7. The lower and upper bytes of a x16 are each treated on a per byte basis.
8. The minimum values are derated by 9% when the device operates between –40°C and 0°C (T_C).
9. Assumes R_{ZQ} = 240Ω; entire operating temperature range after proper ZQ calibration

Output Driver Temperature and Voltage Sensitivity

If temperature and/or voltage change after calibration, the tolerance limits widen according to the equations and tables below.

Micron Technology, Inc. reserves the right to change products or specifications without notice.
© 2018 Micron Technology, Inc. All rights reserved.

$\Delta T = T - T(@calibration)$; $\Delta V = V_{DDQ} - V_{DDQ}(@ calibration)$; $V_{DD} = V_{DDQ}$

Table 125: Output Driver Sensitivity Definitions

Symbol	Min	Max	Unit
R_{ONPU}@ $V_{OH(DC)}$	0.6 - $dR_{ON}dTH \times \lvert\Delta T\rvert$ - $dR_{ON}dVH \times \lvert\Delta V\rvert$	1.1 _ $dR_{ON}dTH \times \lvert\Delta T\rvert$ + $dR_{ON}dVH \times \lvert\Delta V\rvert$	$R_{ZQ}/6$
R_{ON}@ $V_{OM(DC)}$	0.9 - $dR_{ON}dTM \times \lvert\Delta T\rvert$ - $dR_{ON}dVM \times \lvert\Delta V\rvert$	1.1 + $dR_{ON}dTM \times \lvert\Delta T\rvert$ + $dR_{ON}dVM \times \lvert\Delta V\rvert$	$R_{ZQ}/6$
R_{ONPD}@ $V_{OL(DC)}$	0.6 - $dR_{ON}dTL \times \lvert\Delta T\rvert$ - $dR_{ON}dVL \times \lvert\Delta V\rvert$	1.1 + $dR_{ON}dTL \times \lvert\Delta T\rvert$ + $dR_{ON}dVL \times \lvert\Delta V\rvert$	$R_{ZQ}/6$

Table 126: Output Driver Voltage and Temperature Sensitivity

Symbol	Voltage and Temperature Range		Unit
	Min	Max	
$dR_{ON}dTM$	0	1.5	%/°C
$dR_{ON}dVM$	0	0.15	%/mV
$dR_{ON}dTL$	0	1.5	%/°C
$dR_{ON}dVL$	0	0.15	%/mV
$dR_{ON}dTH$	0	1.5	%/°C
$dR_{ON}dVM$	0	0.15	%/mV

Alert Driver

A functional representation of the alert output buffer is shown in the figure below. Output driver impedance, R_{ON}, is defined as follows.

Figure 238: Alert Driver

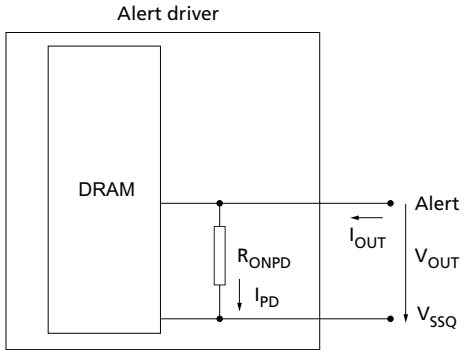

R_{ONPD} when R_{ONPU} is off:

$$R_{ONPD} = \frac{V_{OUT}}{\lvert I_{OUT} \rvert}$$

Micron Technology, Inc. reserves the right to change products or specifications without notice.
© 2018 Micron Technology, Inc. All rights reserved.

Table 127: Alert Driver Voltage

$R_{ON,nom}$	Register	V_{OUT}	Min	Nom	Max	Unit
N/A	R_{ONPD}	$V_{OL(DC)} = 0.1 \times V_{DDQ}$	0.3	N/A	1.2	$R_{ZQ}/7$
		$V_{OM(DC)} = 0.8 \times V_{DDQ}$	0.4	N/A	1.2	$R_{ZQ}/7$
		$V_{OH(DC)} = 1.1 \times V_{DDQ}$	0.4	N/A	1.4	$R_{ZQ}/7$

Notes: 1. V_{DDQ} voltage is at $V_{DDQ(DC)}$.

Micron Technology, Inc. reserves the right to change products or specifications without notice.
© 2018 Micron Technology, Inc. All rights reserved.

Electrical Characteristics – On-Die Termination Characteristics

ODT Levels and I-V Characteristics

On-die termination (ODT) effective resistance settings are defined and can be selected by any or all of the following options:

- MR1[10:8] ($R_{TT(NOM)}$): Disable, 240 ohms, 120 ohms, 80 ohms, 60 ohms, 48 ohms, 40 ohms, and 34 ohms.
- MR2[11:9] ($R_{TT(WR)}$): Disable, 240 ohms,120 ohms, and 80 ohms.
- MR5[8:6] ($R_{TT(Park)}$): Disable, 240 ohms, 120 ohms, 80 ohms, 60 ohms, 48 ohms, 40 ohms, and 34 ohms.

ODT is applied to the following inputs:

- x4: DQ, DM_n, DQS_t, and DQS_c inputs.
- x8: DQ, DM_n, DQS_t, DQS_c, TDQS_t, and TDQS_c inputs.
- x16: DQ, LDM_n, UDM_n, LDQS_t, LDQS_c, UDQS_t, and UDQS_c inputs.

A functional representation of ODT is shown in the figure below.

Figure 239: ODT Definition of Voltages and Currents

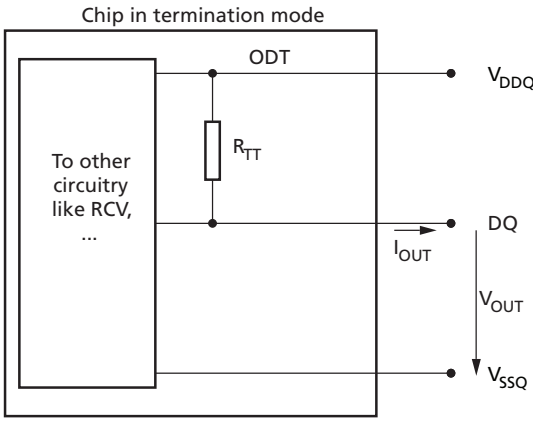

Table 128: ODT DC Characteristics

R_{TT}	V_{OUT}	Min	Nom	Max	Unit	Notes
240 ohm	$V_{OL(DC)} = 0.5 \times V_{DDQ}$	0.9	1	1.25	R_{ZQ}	1, 2, 3
	$V_{OM(DC)} = 0.8 \times V_{DDQ}$	0.9	1	1.1	R_{ZQ}	1, 2, 3
	$V_{OH(DC)} = 1.1 \times V_{DDQ}$	0.8	1	1.1	R_{ZQ}	1, 2, 3
120 ohm	$V_{OL(DC)} = 0.5 \times V_{DDQ}$	0.9	1	1.25	$R_{ZQ}/2$	1, 2, 3
	$V_{OM(DC)} = 0.8 \times V_{DDQ}$	0.9	1	1.1	$R_{ZQ}/2$	1, 2, 3
	$V_{OH(DC)} = 1.1 \times V_{DDQ}$	0.8	1	1.1	$R_{ZQ}/2$	1, 2, 3
80 ohm	$V_{OL(DC)} = 0.5 \times V_{DDQ}$	0.9	1	1.25	$R_{ZQ}/3$	1, 2, 3
	$V_{OM(DC)} = 0.8 \times V_{DDQ}$	0.9	1	1.1	$R_{ZQ}/3$	1, 2, 3
	$V_{OH(DC)} = 1.1 \times V_{DDQ}$	0.8	1	1.1	$R_{ZQ}/3$	1, 2, 3

Micron Technology, Inc. reserves the right to change products or specifications without notice.
© 2018 Micron Technology, Inc. All rights reserved.

Table 128: ODT DC Characteristics (Continued)

R_{TT}	V_{OUT}	Min	Nom	Max	Unit	Notes
60 ohm	$V_{OL(DC)} = 0.5 \times V_{DDQ}$	0.9	1	1.25	$R_{ZQ}/4$	1, 2, 3
	$V_{OM(DC)} = 0.8 \times V_{DDQ}$	0.9	1	1.1	$R_{ZQ}/4$	1, 2, 3
	$V_{OH(DC)} = 1.1 \times V_{DDQ}$	0.8	1	1.1	$R_{ZQ}/4$	1, 2, 3
48 ohm	$V_{OL(DC)} = 0.5 \times V_{DDQ}$	0.9	1	1.25	$R_{ZQ}/5$	1, 2, 3
	$V_{OM(DC)} = 0.8 \times V_{DDQ}$	0.9	1	1.1	$R_{ZQ}/5$	1, 2, 3
	$V_{OH(DC)} = 1.1 \times V_{DDQ}$	0.8	1	1.1	$R_{ZQ}/5$	1, 2, 3
40 ohm	$V_{OL(DC)} = 0.5 \times V_{DDQ}$	0.9	1	1.25	$R_{ZQ}/6$	1, 2, 3
	$V_{OM(DC)} = 0.8 \times V_{DDQ}$	0.9	1	1.1	$R_{ZQ}/6$	1, 2, 3
	$V_{OH(DC)} = 1.1 \times V_{DDQ}$	0.8	1	1.1	$R_{ZQ}/6$	1, 2, 3
34 ohm	$V_{OL(DC)} = 0.5 \times V_{DDQ}$	0.9	1	1.25	$R_{ZQ}/7$	1, 2, 3
	$V_{OM(DC)} = 0.8 \times V_{DDQ}$	0.9	1	1.1	$R_{ZQ}/7$	1, 2, 3
	$V_{OH(DC)} = 1.1 \times V_{DDQ}$	0.8	1	1.1	$R_{ZQ}/7$	1, 2, 3
DQ-to-DQ mismatch within byte	$V_{OM(DC)} = 0.8 \times V_{DDQ}$	0	–	10	%	1, 2, 4, 5, 6

Notes: 1. The tolerance limits are specified after calibration to 240 ohm ±1% resistor with stable voltage and temperature. For the behavior of the tolerance limits if temperature or voltage changes after calibration, see ODT Temperature and Voltage Sensitivity.
2. Micron recommends calibrating pull-up ODT resistors at $0.8 \times V_{DDQ}$. Other calibration schemes may be used to achieve the linearity specification shown here.
3. The tolerance limits are specified under the condition that $V_{DDQ} = V_{DD}$ and $V_{SSQ} = V_{SS}$.
4. The DQ-to-DQ mismatch within byte variation for a given component including DQS_t and DQS_c.
5. R_{TT} variance range ratio to R_{TT} nominal value in a given component, including DQS_t and DQS_c.

$$\text{DQ-to-DQ mismatch} = \frac{R_{TT(MAX)} - R_{TT(MIN)}}{R_{TT(NOM)}} \times 100$$

6. DQ-to-DQ mismatch for a x16 device is treated as two separate bytes.
7. For IT, AT, and UT devices, the minimum values are derated by 9% when the device operates between –40°C and 0°C (TC).

ODT Temperature and Voltage Sensitivity

If temperature and/or voltage change after calibration, the tolerance limits widen according to the following equations and tables.

$\Delta T = T - T(@\ \text{calibration})$; $\Delta V = V_{DDQ} - V_{DDQ}(@\ \text{calibration})$; $V_{DD} = V_{DDQ}$

Table 129: ODT Sensitivity Definitions

Parameter	Min	Max	Unit
R_{TT}@	$0.9 - dR_{TT}dT \times \lvert\Delta T\rvert - dR_{TT}dV \times \lvert\Delta V\rvert$	$1.6 + dR_{TT}dTH \times \lvert\Delta T\rvert + dR_{TT}dVH \times \lvert\Delta V\rvert$	R_{ZQ}/n

Micron Technology, Inc. reserves the right to change products or specifications without notice.
© 2018 Micron Technology, Inc. All rights reserved.

Table 130: ODT Voltage and Temperature Sensitivity

Parameter	Min	Max	Unit
$dR_{TT}dT$	0	1.5	%/°C
$dR_{TT}dV$	0	0.15	%/mV

ODT Timing Definitions

The reference load for ODT timings is different than the reference load used for timing measurements.

Figure 240: ODT Timing Reference Load

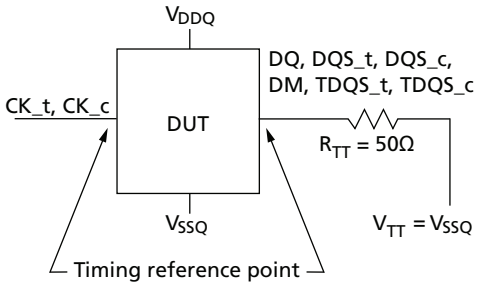

ODT Timing Definitions and Waveforms

Definitions for ^{t}ADC, ^{t}AONAS, and ^{t}AOFAS are provided in the 4 and shown in 3 and 5. Measurement reference settings are provided in the subsequent 5.

The ^{t}ADC for the dynamic ODT case and read disable ODT cases are represented by ^{t}ADC of Direct ODT Control case.

Table 131: ODT Timing Definitions

Parameter	Begin Point Definition	End Point Definition	Figure
^{t}ADC	Rising edge of CK_t, CK_c defined by the end point of DODTLoff	Extrapolated point at $V_{RTT,nom}$	3
	Rising edge of CK_t, CK_c defined by the end point of DODTLon	Extrapolated point at V_{SSQ}	3
	Rising edge of CK_t, CK_c defined by the end point of ODTLcnw	Extrapolated point at $V_{RTT,nom}$	4
	Rising edge of CK_t, CK_c defined by the end point of ODTLcwn4 or ODTLcwn8	Extrapolated point at V_{SSQ}	4
^{t}AONAS	Rising edge of CK_t, CK_c with ODT being first registered HIGH	Extrapolated point at V_{SSQ}	5
^{t}AOFAS	Rising edge of CK_t, CK_c with ODT being first registered LOW	Extrapolated point at $V_{RTT,nom}$	5

Micron Technology, Inc. reserves the right to change products or specifications without notice.
© 2018 Micron Technology, Inc. All rights reserved.

Table 132: Reference Settings for ODT Timing Measurements

Measure Parameter	$R_{TT(Park)}$	$R_{TT(NOM)}$	$R_{TT(WR)}$	VSW1	VSW2	Note
^{t}ADC	Disable	$R_{ZQ}/7$ (34Ω)	–	0.20V	0.40V	1, 2, 4
	–	$R_{ZQ}/7$ (34Ω)	High-Z	0.20V	0.40V	1, 3, 5
^{t}AONAS	Disable	$R_{ZQ}/7$ (34Ω)	–	0.20V	0.40V	1, 2, 6
^{t}AOFAS	Disable	$R_{ZQ}/7$ (34Ω)	–	0.20V	0.40V	1, 2, 6

Notes: 1. MR settings are as follows: MR1 has A10 = 1, A9 = 1, A8 = 1 for $R_{TT(NOM)}$ setting; MR5 has A8 = 0, A7 = 0, A6 = 0 for $R_{TT(Park)}$ setting; and MR2 has A11 = 0, A10 = 1, A9 = 1 for $R_{TT(WR)}$ setting.
2. ODT state change is controlled by ODT pin.
3. ODT state change is controlled by a WRITE command.
4. Refer to 3.
5. Refer to 4.
6. Refer to 5.

Figure 241: ^{t}ADC Definition with Direct ODT Control

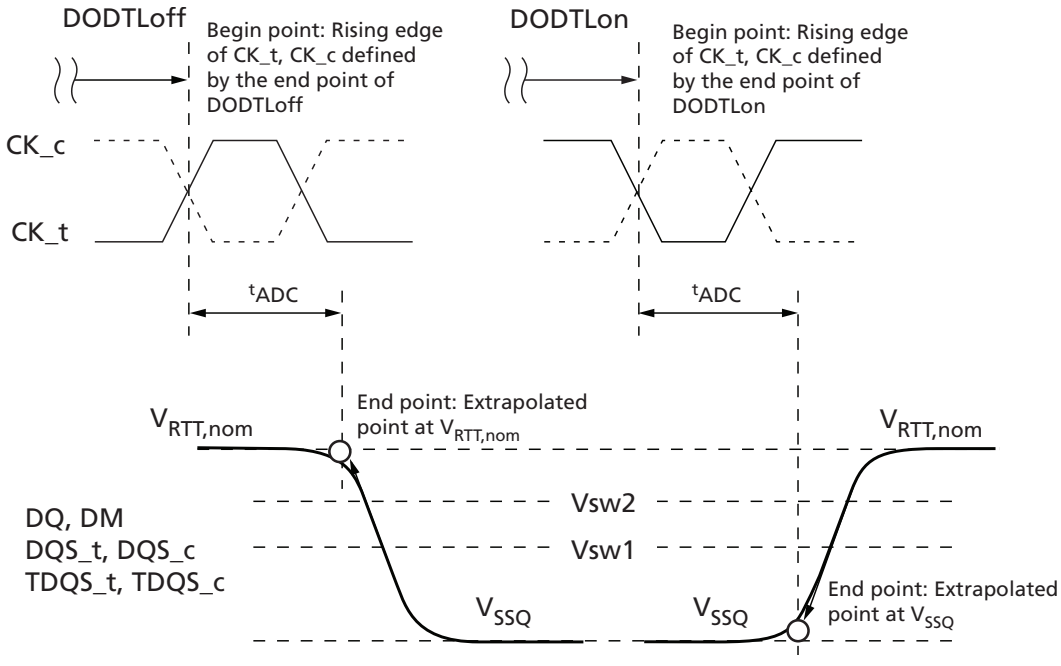

Micron Technology, Inc. reserves the right to change products or specifications without notice.
© 2018 Micron Technology, Inc. All rights reserved.

Figure 242: ^{t}ADC Definition with Dynamic ODT Control

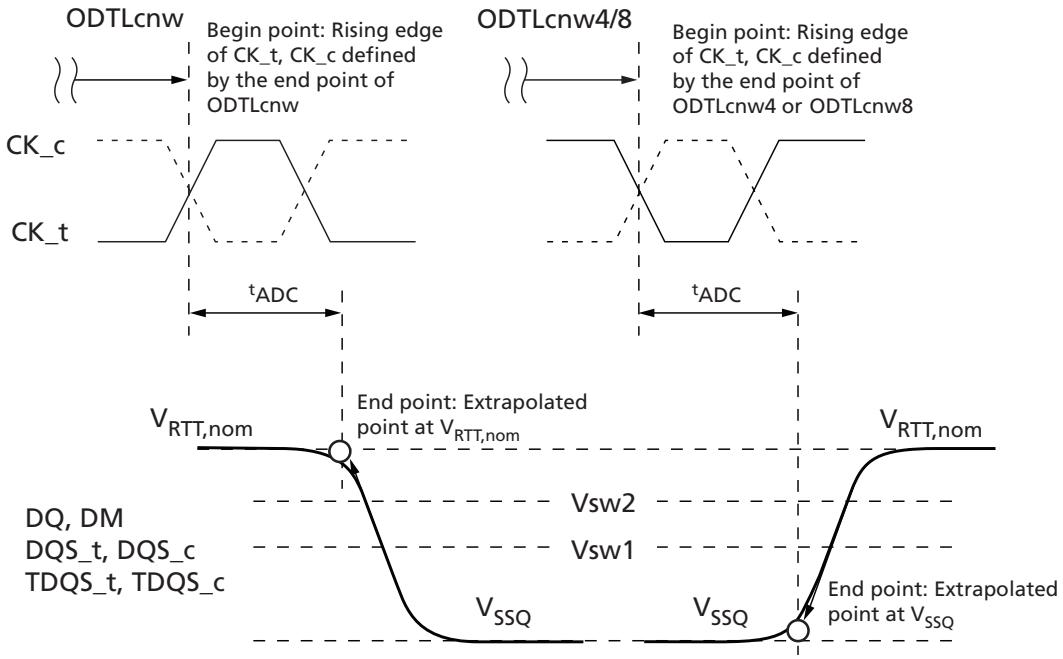

Figure 243: ^{t}AOFAS and ^{t}AONAS Definitions

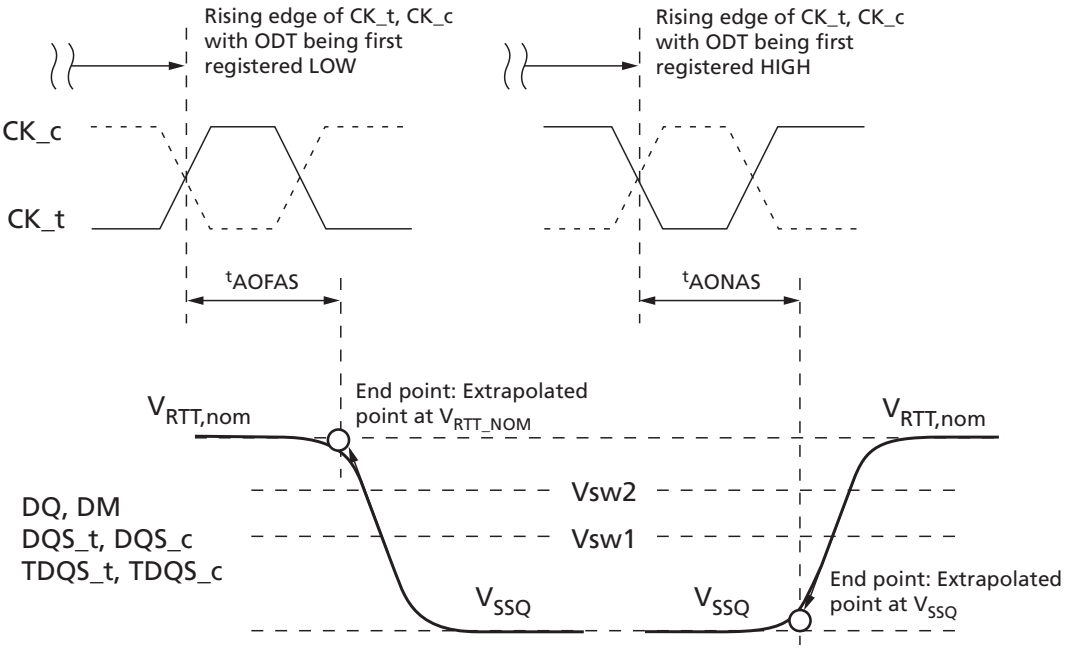

Micron Technology, Inc. reserves the right to change products or specifications without notice.
© 2018 Micron Technology, Inc. All rights reserved.

DRAM Package Electrical Specifications

Table 133: DRAM Package Electrical Specifications for x4 and x8 Devices

Parameter		Symbol	1600/1866/2133/2400/2666		2933		3200		Unit	Notes
			Min	Max	Min	Max	Min	Max		
Input/output	Zpkg	Z_{IO}	45	85	48	85	48	85	ohm	1, 2, 4
	Package delay	Td_{IO}	14	42	14	40	14	40	ps	1, 3, 4
	Lpkg	L_{IO}	–	3.3	–	3.3	–	3.3	nH	10
	Cpkg	C_{IO}	–	0.78	–	0.78	–	0.78	pF	11
DQS_t, DQS_c	Zpkg	$Z_{IO\ DQS}$	45	85	48	85	48	85	ohm	1, 2
	Package delay	$Td_{IO\ DQS}$	14	42	14	40	14	40	ps	1, 3
	Delta Zpkg	$DZ_{IO\ DQS}$	–	10	–	10	–	10	ohm	1, 2, 6
	Delta delay	$DTd_{IO\ DQS}$	–	5	–	5	–	5	ps	1, 3, 6
	Lpkg	$L_{IO\ DQS}$	–	3.3	–	3.3	–	3.3	nH	10
	Cpkg	$C_{IO\ DQS}$	–	0.78	–	0.78	–	0.78	pF	11
Input CTRL pins	Zpkg	$Z_{I\ CTRL}$	50	90	50	90	50	90	ohm	1, 2, 8
	Package delay	$Td_{I\ CTRL}$	14	42	14	40	14	40	ps	1, 3, 8
	Lpkg	$L_{I\ CTRL}$	–	3.4	–	3.4	–	3.4	nH	10
	Cpkg	$C_{I\ CTRL}$	–	0.7	–	0.7	–	0.7	pF	11
Input CMD ADD pins	Zpkg	$Z_{I\ ADD\ CMD}$	50	90	50	90	50	90	ohm	1, 2, 7
	Package delay	$Td_{I\ ADD\ CMD}$	14	45	14	40	14	40	ps	1, 3, 7
	Lpkg	$L_{I\ ADD\ CMD}$	–	3.6	–	3.6	–	3.6	nH	10
	Cpkg	$C_{I\ ADD\ CMD}$	–	0.74	–	0.74	–	0.74	pF	11
CK_t, CK_c	Zpkg	Z_{CK}	50	90	50	90	50	90	ohm	1, 2
	Package delay	Td_{CK}	14	42	14	42	14	42	ps	1, 3
	Delta Zpkg	DZ_{DCK}	–	10	–	10	–	10	ohm	1, 2, 5
	Delta delay	DTd_{DCK}	–	5	–	5	–	5	ps	1, 3, 5
	Lpkg	$L_{I\ CLK}$	–	3.4	–	3.4	–	3.4	nH	10
	Cpkg	$C_{I\ CLK}$	–	0.7	–	0.7	–	0.7	pF	11
ZQ Zpkg		$Z_{O\ ZQ}$	–	100	–	100	–	100	ohm	1, 2
ZQ delay		$Td_{O\ ZQ}$	20	90	20	90	20	90	ps	1, 3
ALERT Zpkg		$Z_{O\ ALERT}$	40	100	40	100	40	100	ohm	1, 2
ALERT delay		$Td_{O\ ALERT}$	20	55	20	55	20	55	ps	1, 3

Notes: 1. This parameter is not subject to a production test; it is verified by design and characterization and are provided for reference; system signal simulations should not use these values but use the Micron package model. The package parasitic (L and C) are validated using package only samples. The capacitance is measured with V_{DD}, V_{DDQ},

Micron Technology, Inc. reserves the right to change products or specifications without notice.
© 2018 Micron Technology, Inc. All rights reserved.

V_{SS}, and V_{SSQ} shorted with all other signal pins floating. The inductance is measured with V_{DD}, V_{DDQ}, V_{SS}, and V_{SSQ} shorted and all other signal pins shorted at the die, not pin, side.

2. Package-only impedance (Zpkg) is calculated based on the Lpkg and Cpkg total for a given pin where: Zpkg (total per pin) = SQRT (Lpkg/Cpkg).
3. Package-only delay (Tpkg) is calculated based on Lpkg and Cpkg total for a given pin where: Tdpkg (total per pin) = SQRT (Lpkg × Cpkg).
4. Z_{IO} and Td_{IO} apply to DQ, DM, TDQS_t and TDQS_c.
5. Absolute value of ZCK_t, ZCK_c for impedance (Z) or absolute value of TdCK_t, TdCK_c for delay (Td).
6. Absolute value of ZIO (DQS_t), ZIO (DQS_c) for impedance (Z) or absolute value of TdIO (DQS_t), TdIO (DQS_c) for delay (Td).
7. $Z_{I\ ADD\ CMD}$ and $Td_{I\ ADD\ CMD}$ apply to A[17:0], BA[1:0], BG[1:0], RAS_n CAS_n, WE_n, ACT_n, and PAR.
8. $Z_{I\ CTRL}$ and $Td_{I\ CTRL}$ apply to ODT, CS_n, and CKE.
9. Package implementations will meet specification if the Zpkg and package delay fall within the ranges shown, and the maximum Lpkg and Cpkg do not exceed the maximum values shown.
10. It is assumed that Lpkg can be approximated as Lpkg = Z_O × Td.
11. It is assumed that Cpkg can be approximated as Cpkg = Td/Z_O.

Table 134: DRAM Package Electrical Specifications for x16 Devices

Parameter		Symbol	1600/1866/2133/2400/2666		2933		3200		Unit	Notes
			Min	Max	Min	Max	Min	Max		
Input/output	Zpkg	Z_{IO}	45	85	45	85	45	85	ohm	1, 2, 4
	Package delay	Td_{IO}	14	45	14	45	14	45	ps	1, 3, 4
	Lpkg	L_{IO}	–	3.4	–	3.4	–	3.4	nH	11
	Cpkg	C_{IO}	–	0.82	–	0.82	–	0.82	pF	11
LDQS_t/LDQS_c/UDQS_t/UDQS_c	Zpkg	$Z_{IO\ DQS}$	45	85	45	85	45	85	ohm	1, 2
	Package delay	$Td_{IO\ DQS}$	14	45	14	45	14	45	ps	1, 3
	Lpkg	$L_{IO\ DQS}$	–	3.4	–	3.4	–	3.4	nH	11
	Cpkg	$C_{IO\ DQS}$	–	0.82	–	0.82	–	0.82	pF	11
LDQS_t/LDQS_c, UDQS_t/UDQS_c,	Delta Zpkg	$DZ_{IO\ DQS}$	–	10.5	–	10.5	–	10.5	ohm	1, 2, 6
	Delta delay	$DTd_{IO\ DQS}$	–	5	–	5	–	5	ps	1, 3, 6
Input CTRL pins	Zpkg	$Z_{I\ CTRL}$	50	90	50	90	50	90	ohm	1, 2, 8
	Package delay	$Td_{I\ CTRL}$	14	42	14	42	14	42	ps	1, 3, 8
	Lpkg	$L_{I\ CTRL}$	–	3.4	–	3.4	–	3.4	nH	11
	Cpkg	$C_{I\ CTRL}$	–	0.7	–	0.7	–	0.7	pF	11
Input CMD ADD pins	Zpkg	$Z_{I\ ADD\ CMD}$	50	90	50	90	50	90	ohm	1, 2, 7
	Package delay	$Td_{I\ ADD\ CMD}$	14	52	14	52	14	52	ps	1, 3, 7
	Lpkg	$L_{I\ ADD\ CMD}$	–	3.9	–	3.9	–	3.9	nH	11
	Cpkg	$C_{I\ ADD\ CMD}$	–	0.86	–	0.86	–	0.86	pF	11

Micron Technology, Inc. reserves the right to change products or specifications without notice.
© 2018 Micron Technology, Inc. All rights reserved.

Table 134: DRAM Package Electrical Specifications for x16 Devices (Continued)

Parameter		Symbol	1600/1866/2133/2400/2666		2933		3200		Unit	Notes
			Min	Max	Min	Max	Min	Max		
CK_t, CK_c	Zpkg	Z_{CK}	50	90	50	90	50	90	ohm	1, 2
	Package delay	Td_{CK}	14	42	14	42	14	42	ps	1, 3
	Delta Zpkg	DZ_{DCK}	–	10.5	–	10.5	–	10.5	ohm	1, 2, 5
	Delta delay	DTd_{DCK}	–	5	–	5	–	5	ps	1, 3, 5
Input CLK	Lpkg	$L_{I\ CLK}$	–	3.4	–	3.4	–	3.4	nH	11
	Cpkg	$C_{I\ CLK}$	–	0.7	–	0.7	–	0.7	pF	11
ZQ Zpkg		$Z_{O\ ZQ}$	–	100	–	100	–	100	ohm	1, 2
ZQ delay		$Td_{O\ ZQ}$	20	90	20	90	20	90	ps	1, 3
ALERT Zpkg		$Z_{O\ ALERT}$	40	100	40	100	40	100	ohm	1, 2
ALERT delay		$Td_{O\ ALERT}$	20	55	20	55	20	55	ps	1, 3

Notes:
1. This parameter is not subject to a production test; it is verified by design and characterization and are provided for reference; system signal simulations should not use these values but use the Micron package model. The package parasitic (L and C) are validated using package only samples. The capacitance is measured with V_{DD}, V_{DDQ}, V_{SS}, and V_{SSQ} shorted with all other signal pins floating. The inductance is measured with V_{DD}, V_{DDQ}, V_{SS}, and V_{SSQ} shorted and all other signal pins shorted at the die, not pin, side.
2. Package-only impedance (Zpkg) is calculated based on the Lpkg and Cpkg total for a given pin where: Zpkg (total per pin) = SQRT (Lpkg/Cpkg).
3. Package-only delay (Tpkg) is calculated based on Lpkg and Cpkg total for a given pin where: Tdpkg (total per pin) = SQRT (Lpkg × Cpkg).
4. Z_{IO} and Td_{IO} apply to DQ, DM, TDQS_t and TDQS_c.
5. Absolute value of ZCK_t, ZCK_c for impedance (Z) or absolute value of TdCK_t, TdCK_c for delay (Td).
6. Absolute value of ZIO (DQS_t), ZIO (DQS_c) for impedance (Z) or absolute value of TdIO (DQS_t), TdIO (DQS_c) for delay (Td).
7. $Z_{I\ ADD\ CMD}$ and $Td_{I\ ADD\ CMD}$ apply to A[17:0], BA[1:0], BG[1:0], RAS_n CAS_n, WE_n, ACT_n, and PAR.
8. $Z_{I\ CTRL}$ and $Td_{I\ CTRL}$ apply to ODT, CS_n, and CKE.
9. Package implementations will meet specification if the Zpkg and package delay fall within the ranges shown, and the maximum Lpkg and Cpkg do not exceed the maximum values shown.
10. It is assumed that Lpkg can be approximated as Lpkg = Z_O × Td.
11. It is assumed that Cpkg can be approximated as Cpkg = Td/Z_O.

Micron Technology, Inc. reserves the right to change products or specifications without notice.
© 2018 Micron Technology, Inc. All rights reserved.

Table 135: Pad Input/Output Capacitance

Parameter	Symbol	DDR4-1600, 1866, 2133		DDR4-2400, 2666		DDR4-2933		DDR4-3200		Unit	Notes
		Min	Max	Min	Max	Min	Max	Min	Max		
Input/output capacitance: DQ, DM, DQS_t, DQS_c, TDQS_t, TDQS_c	C_{IO}	0.55	1.4	0.55	1.15	0.55	1.00	0.55	1.00	pF	1, 2, 3
Input capacitance: CK_t and CK_c	C_{CK}	0.2	0.8	0.2	0.7	0.2	0.7	0.15	0.7	pF	2, 3
Input capacitance delta: CK_t and CK_c	C_{DCK}	-	0.05	-	0.05	-	0.05	-	0.05	pF	2, 3, 6
Input/output capacitance delta: DQS_t and DQS_c	C_{DDQS}	-	0.05	-	0.05	-	0.05	-	0.05	pF	2, 3, 5
Input capacitance: CTRL, ADD, CMD input-only pins	C_I	0.2	0.8	0.2	0.7	0.2	0.6	0.15	0.55	pF	2, 3, 4
Input capacitance delta: All CTRL input-only pins	C_{DI_CTRL}	–0.1	0.1	–0.1	0.1	–0.1	0.1	–0.1	0.1	pF	2, 3, 8, 9
Input capacitance delta: All ADD/CMD input-only pins	$C_{DI_ADD_CMD}$	–0.1	0.1	–0.1	0.1	–0.1	0.1	–0.1	0.1	pF	1, 2, 10, 11
Input/output capacitance delta: DQ, DM, DQS_t, DQS_c, TDQS_t, TDQS_c	C_{DIO}	–0.1	0.1	–0.1	0.1	–0.1	0.1	–0.1	0.1	pF	1, 2, 3, 4
Input/output capacitance: ALERT pin	C_{ALERT}	0.5	1.5	0.5	1.5	0.5	1.5	0.5	1.5	pF	2, 3
Input/output capacitance: ZQ pin	C_{ZQ}	–	2.3	–	2.3	–	2.3	–	2.3	pF	2, 3, 12
Input/output capacitance: TEN pin	C_{TEN}	0.2	2.3	0.2	2.3	0.2	2.3	0.15	2.3	pF	2, 3, 13

Notes:
1. Although the DM, TDQS_t, and TDQS_c pins have different functions, the loading matches DQ and DQS.
2. This parameter is not subject to a production test; it is verified by design and characterization and are provided for reference; system signal simulations should not use these values but use the Micron package model. The capacitance, if and when, is measured according to the JEP147 specification, "Procedure for Measuring Input Capacitance Using a Vector Network Analyzer (VNA)," with V_{DD}, V_{DDQ}, V_{SS}, and V_{SSQ} applied and all other pins floating (except the pin under test, CKE, RESET_n and ODT, as necessary). $V_{DD} = V_{DDQ} = 1.2V$, $V_{BIAS} = V_{DD}/2$ and on-die termination off. Measured data is rounded using industry standard half-rounded up methodology to the nearest hundredth of the MSB.
3. This parameter applies to monolithic die, obtained by de-embedding the package L and C parasitics.
4. $C_{DIO} = C_{IO}(DQ, DM) - 0.5 \times (C_{IO}(DQS_t) + C_{IO}(DQS_c))$.
5. Absolute value of C_{IO} (DQS_t), C_{IO} (DQS_c)
6. Absolute value of CCK_t, CCK_c
7. C_I applies to ODT, CS_n, CKE, A[17:0], BA[1:0], BG[1:0], RAS_n, CAS_n, ACT_n, PAR and WE_n.
8. C_{DI_CTRL} applies to ODT, CS_n, and CKE.
9. $C_{DI_CTRL} = C_I(CTRL) - 0.5 \times (C_I(CLK_t) + C_I(CLK_c))$.
10. $C_{DI_ADD_CMD}$ applies to A[17:0], BA1:0], BG[1:0], RAS_n, CAS_n, ACT_n, PAR and WE_n.
11. $C_{DI_ADD_CMD} = C_I(ADD_CMD) - 0.5 \times (C_I(CLK_t) + C_I(CLK_c))$.
12. Maximum external load capacitance on ZQ pin: 5pF.
13. Only applicable if TEN pin does not have an internal pull-up.

Micron Technology, Inc. reserves the right to change products or specifications without notice.
© 2018 Micron Technology, Inc. All rights reserved.

Thermal Characteristics

Table 136: Thermal Characteristics

Parameter/Condition			Value	Units	Symbol	Notes
Operating case temperature: Commercial			0 to +85	°C	T_C	1, 2, 3
			0 to +95	°C	T_C	1, 2, 3, 4
Operating case temperature: Industrial			–40 to +85	°C	T_C	1, 2, 3
			–40 to +95	°C	T_C	1, 2, 3, 4
Operating case temperature: Automotive			–40 to +85	°C	T_C	1, 2, 3
			–40 to +105	°C	T_C	1, 2, 3, 4
REV B	78-ball “VA”	Junction-to-case (TOP)	3.6	°C/W	ΘJC	5
		Junction-to-board	13.6	°C/W	ΘJB	
	96-ball “RC”	Junction-to-case (TOP)	3.5	°C/W	ΘJC	5
		Junction-to-board	12.7	°C/W	ΘJB	
REV E	78-ball “JC”	Junction-to-case (TOP)	4.2	°C/W	ΘJC	5
		Junction-to-board	13	°C/W	ΘJB	
	96-ball "KD"	Junction-to-case (TOP)	4.1	°C/W	ΘJC	5
		Junction-to-board	12.3	°C/W	ΘJB	
REV F	78-ball "SA"	Junction-to-case (TOP)	5.4	°C/W	ΘJC	5
		Junction-to-board	13.4	°C/W	ΘJB	
	96 ball "TB"	Junction-to-case (TOP)	5.3	°C/W	ΘJC	5
		Junction-to-board	12.9	°C/W	ΘJB	

Notes: 1. MAX operating case temperature. T_C is measured in the center of the package.
2. A thermal solution must be designed to ensure the DRAM device does not exceed the maximum T_C during operation.
3. Device functionality is not guaranteed if the DRAM device exceeds the maximum T_C during operation.
4. If T_C exceeds 85°C, the DRAM must be refreshed externally at 2x refresh, which is a 3.9µs interval refresh rate.
5. The thermal resistance data is based off of a typical number.

Micron Technology, Inc. reserves the right to change products or specifications without notice.
© 2018 Micron Technology, Inc. All rights reserved.

Figure 244: Thermal Measurement Point

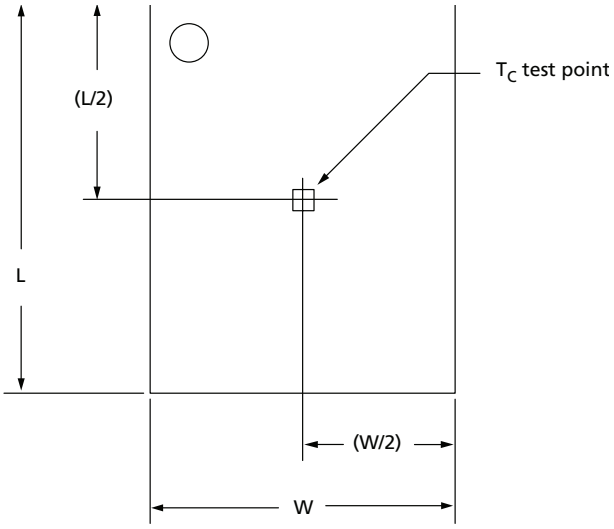

Current Specifications – Measurement Conditions

I_{DD}, I_{PP}, and I_{DDQ} Measurement Conditions

I_{DD}, I_{PP}, and I_{DDQ} measurement conditions, such as test load and patterns, are defined in this section.

- I_{DD} currents (I_{DD0}, I_{DD1}, I_{DD2N}, I_{DD2NT}, I_{DD2P}, I_{DD2Q}, I_{DD3N}, I_{DD3P}, I_{DD4R}, I_{DD4W}, I_{DD5R}, I_{DD6N}, I_{DD6E}, I_{DD6R}, I_{DD6A}, I_{DD7}, $_{DD8}$ and I_{DD9}) are measured as time-averaged currents with all V_{DD} balls of the device under test grouped together.
- I_{PP} currents are I_{PP3N} for standby cases (I_{DD2N}, I_{DD2NT}, I_{DD2P}, I_{DD2Q}, I_{DD3N}, I_{DD3P}, I_{DD8}), I_{PP0} for active cases (I_{DD0},I_{DD1}, I_{DD4R}, I_{DD4W}), I_{PP5R} for the distributed refresh case (I_{DD5R}), I_{PP6x} for self refresh cases (I_{DD6N}, I_{DD6E}, I_{DD6R}, I_{DD6A}), I_{PP7} for the operating bank interleave read case (I_{DD7}) and I_{PP9} for the MBIST-PPR operation case. These have the same definitions as the I_{DD} currents referenced but are measured on the V_{PP} supply.
- I_{DDQ} currents are measured as time-averaged currents with V_{DDQ} balls of the device under test grouped together. Micron does not specify I_{DDQ} currents.
- I_{PP} and I_{DDQ} currents are not included in I_{DD} currents, I_{DD} and I_{DDQ} currents are not included in I_{PP} currents, and I_{DD} and I_{PP} currents are not included in I_{DDQ} currents.

NOTE: I_{DDQ} values cannot be directly used to calculate the I/O power of the device. They can be used to support correlation of simulated I/O power to actual I/O power. In DRAM module application, I_{DDQ} cannot be measured separately because V_{DD} and V_{DDQ} are using a merged-power layer in the module PCB.

The following definitions apply for I_{DD}, I_{PP} and I_{DDQ} measurements.

- "0" and "LOW" are defined as $V_{IN} \leq V_{IL(AC)max}$
- "1" and "HIGH" are defined as $V_{IN} \geq V_{IH(AC)min}$
- "Midlevel" is defined as inputs $V_{REF} = V_{DD}/2$
- Timings used for I_{DD}, I_{PP} and I_{DDQ} measurement-loop patterns are provided in the Current Test Definition and Patterns section.

Micron Technology, Inc. reserves the right to change products or specifications without notice.
© 2018 Micron Technology, Inc. All rights reserved.

- Basic I_{DD}, I_{PP}, and I_{DDQ} measurement conditions are described in the Current Test Definition and Patterns section.
- Detailed I_{DD}, I_{PP}, and I_{DDQ} measurement-loop patterns are described in the Current Test Definition and Patterns section.
- Current measurements are done after properly initializing the device. This includes, but is not limited to, setting:
  $R_{ON} = R_{ZQ}/7$ (34 ohm in MR1);
  Qoff = 0B (output buffer enabled in MR1);
  $R_{TT(NOM)} = R_{ZQ}/6$ (40 ohm in MR1);
  $R_{TT(WR)} = R_{ZQ}/2$ (120 ohm in MR2);
  $R_{TT(Park)}$ = disabled;
  TDQS feature disabled in MR1; CRC disabled in MR2; CA parity feature disabled in MR3; Gear-down mode disabled in MR3; Read/Write DBI disabled in MR5; DM disabled in MR5
- Define D = {CS_n, RAS_n, CAS_n, WE_n}: = {HIGH, LOW, LOW, LOW}; apply BG/BA changes when directed.
- Define D_n = {CS_n, RAS_n, CAS_n, WE_n}: = {HIGH, HIGH, HIGH, HIGH}; apply invert of BG/BA changes when directed above.

NOTE: The measurement-loop patterns must be executed at least once before actual current measurements can be taken, with the exception of IDD9 which may be measured any time after MBIST-PPR entry.

Figure 245: Measurement Setup and Test Load for I_{DDx}, I_{PPx}, and I_{DDQx}

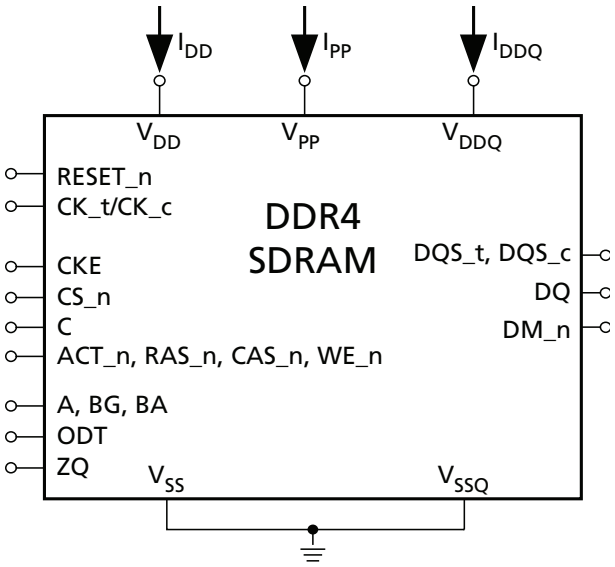

Micron Technology, Inc. reserves the right to change products or specifications without notice.
© 2018 Micron Technology, Inc. All rights reserved.

Figure 246: Correlation: Simulated Channel I/O Power to Actual Channel I/O Power

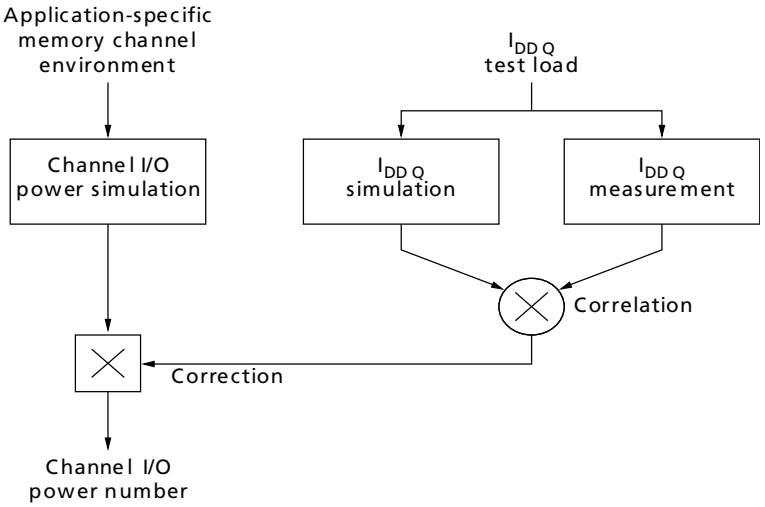

Note: 1. Supported by I_{DDQ} measurement.

I_{DD} Definitions

Table 137: Basic I_{DD}, I_{PP}, and I_{DDQ} Measurement Conditions

Symbol	Description
I_{DD0}	**Operating One Bank Active-Precharge Current (AL = 0)** CKE: HIGH; External clock: On; ^{t}CK, *n*RC, *n*RAS, CL: see the previous table; BL: 8;[1] AL: 0; CS_n: HIGH between ACT and PRE; Command, address, bank group address, bank address inputs: partially toggling according to the next table; Data I/O: V_{DDQ}; DM_n: stable at 0; Bank activity: cycling with one bank active at a time: 0, 0, 1, 1, 2, 2, ... (see the I_{DD0} Measurement-Loop Pattern table); Output buffer and R_{TT}: enabled in mode registers;[2] ODT signal: stable at 0; Pattern details: see the I_{DD0} Measurement-Loop Pattern table
I_{PP0}	**Operating One Bank Active-Precharge I_{PP} Current (AL = 0)** Same conditions as I_{DD0} above
I_{DD1}	**Operating One Bank Active-Read-Precharge Current (AL = 0)** CKE: HIGH; External clock: on; ^{t}CK, *n*RC, *n*RAS, *n*RCD, CL: see the previous table; BL: 8;[1, 5] AL: 0; CS_n: HIGH between ACT, RD, and PRE; Command, address, bank group address, bank address inputs, Data I/O: partially toggling according to the I_{DD1} Measurement-Loop Pattern table; DM_n: stable at 0; Bank activity: cycling with one bank active at a time: 0, 0, 1, 1, 2, 2, ... (see the following table); Output buffer and R_{TT}: enabled in mode registers;[2] ODT Signal: stable at 0; Pattern details: see the I_{DD1} Measurement-Loop Pattern table
I_{DD2N}	**Precharge Standby Current (AL = 0)** CKE: HIGH; External clock: On; ^{t}CK, CL: see the previous table; BL: 8;[1] AL: 0; CS_n: stable at 1; Command, address, bank group address, bank address Inputs: partially toggling according to the I_{DD2N} and I_{DD3N} Measurement-Loop Pattern table; Data I/O: V_{DDQ}; DM_n: stable at 1; Bank activity: all banks closed; Output buffer and R_{TT}: enabled in mode registers;[2] ODT signal: stable at 0; Pattern details: see the I_{DD2N} and I_{DD3N} Measurement-Loop Pattern table

Micron Technology, Inc. reserves the right to change products or specifications without notice.
© 2018 Micron Technology, Inc. All rights reserved.

Table 137: Basic I_{DD}, I_{PP}, and I_{DDQ} Measurement Conditions

Symbol	Description
I_{DD2NT}	**Precharge Standby ODT Current** CKE: HIGH; External clock: on; ^{t}CK, CL: see the previous table; BL: 8;[1] AL: 0; CS_n: stable at 1; Command, address, bank gropup address, bank address inputs: partially toggling according to the I_{DD2NT} Measurement-Loop Pattern table; Data I/O: V_{SSQ}; DM_n: stable at 1; Bank activity: all banks closed; Output buffer and R_{TT}: enabled in mode registers;[2] ODT signal: toggling according to the I_{DD2NT} Measurement-Loop Pattern table; Pattern details: see the I_{DD2NT} Measurement-Loop Pattern table
I_{DD2P}	**Precharge Power-Down Current** CKE: LOW; External clock: on; ^{t}CK, CL: see the previous table; BL: 8;[1] AL: 0; CS_n: stable at 1; Command, address, bank group address, bank address inputs: stable at 0; Data I/O: V_{DDQ}; DM_n: stable at 1; Bank activity: all banks closed; Output buffer and R_{TT}: Enabled in mode registers;[2] ODT signal: stable at 0
I_{DD2Q}	**Precharge Quiet Standby Current** CKE: HIGH; External clock: on; ^{t}CK, CL: see the previous table; BL: 8;[1] AL: 0; CS_n: stable at 1; Command, address, bank group address, bank address inputs: stable at 0; Data I/O: V_{DDQ}; DM_n: stable at 1; Bank activity: all banks closed; Output buffer and R_{TT}: Enabled in mode registers;[2] ODT signal: stable at 0
I_{DD3N}	**Active Standby Current (AL = 0)** CKE: HIGH; External clock: on; ^{t}CK, CL: see the previous table; BL: 8;[1] AL: 0; CS_n: stable at 1; Command, address, bank group address, bank address inputs: partially toggling according to the I_{DD2N} and I_{DD3N} Measurement-Loop Pattern table; Data I/O: V_{DDQ}; DM_n: stable at 1; Bank activity: all banks open; Output buffer and R_{TT}: Enabled in mode registers;[2] ODT signal: stable at 0; Pattern details: see the I_{DD2N} and I_{DD3N} Measurement-Loop Pattern table
I_{PP3N}	**Active Standby I_{PP3N} Current (AL = 0)** Same conditions as I_{DD3N} above
I_{DD3P}	**Active Power-Down Current (AL = 0)** CKE: LOW; External clock: on; ^{t}CK, CL: see the previous table; BL: 8;[1] AL: 0; CS_n: stable at 1; Command, address, bank group address, bank address inputs: stable at 1; Data I/O: V_{DDQ}; DM_n: stable at 1; Bank activity: all banks open; Output buffer and R_{TT}: Enabled in mode registers;[2] ODT signal: stable at 0
I_{DD4R}	**Operating Burst Read Current (AL = 0)** CKE: HIGH; External clock: on; ^{t}CK, CL: see the previous table; BL: 8;[5] AL: 0; CS_n: HIGH between RD; Command, address, bank group address, bank address inputs: partially toggling according to the I_{DD4R} Measurement-Loop Pattern table; Data I/O: seamless read data burst with different data between one burst and the next one according to the I_{DD4R} Measurement-Loop Pattern table; DM_n: stable at 1; Bank activity: all banks open, RD commands cycling through banks: 0, 0, 1, 1, 2, 2, ... (see the I_{DD4R} Measurement-Loop Pattern table); Output buffer and R_{TT}: Enabled in mode registers;[2] ODT signal: stable at 0; Pattern details: see the I_{DD4R} Measurement-Loop Pattern table
I_{DD4W}	**Operating Burst Write Current (AL = 0)** CKE: HIGH; External clock: on; ^{t}CK, CL: see the previous table; BL: 8;[1] AL: 0; CS_n: HIGH between WR; Command, address, bank group address, bank address inputs: partially toggling according to the I_{DD4W} Measurement-Loop Pattern table; Data I/O: seamless write data burst with different data between one burst and the next one according to the I_{DD4W} Measurement-Loop Pattern table; DM: stable at 0; Bank activity: all banks open, WR commands cycling through banks: 0, 0, 1, 1, 2, 2, ... (see I_{DD4W} Measurement-Loop Pattern table); Output buffer and R_{TT}: enabled in mode registers (see note2); ODT signal: stable at HIGH; Pattern details: see the I_{DD4W} Measurement-Loop Pattern table

Micron Technology, Inc. reserves the right to change products or specifications without notice.
© 2018 Micron Technology, Inc. All rights reserved.

Table 137: Basic I_{DD}, I_{PP}, and I_{DDQ} Measurement Conditions

Symbol	Description
I_{DD5R}	**Distributed Refresh Current (1X REF)** CKE: HIGH; External clock: on; ^{t}CK, CL, *n*REFI: see the previous table; BL: 8;[1] AL: 0; CS_n: HIGH between REF; Command, address, bank group address, bank address inputs: partially toggling according to the I_{DD5R} Measurement-Loop Pattern table; Data I/O: V_{DDQ}; DM_n: stable at 1; Bank activity: REF command every *n*REFI (see the I_{DD5R} Measurement-Loop Pattern table); Output buffer and R_{TT}: enabled in mode registers[2]; ODT signal: stable at 0; Pattern details: see the I_{DD5R} Measurement-Loop Pattern table
I_{PP5R}	**Distributed Refresh Current (1X REF)** Same conditions as I_{DD5R} above
I_{DD6N}	**Self Refresh Current: Normal Temperature Range** T_C: 0–85°C; Auto self refresh (ASR): disabled;[3] Self refresh temperature range (SRT): normal;[4] CKE: LOW; External clock: off; CK_t and CK_c: LOW; CL: see the table above; BL: 8;[1] AL: 0; CS_n, command, address, bank group address, bank address, data I/O: V_{DDQ}; DM_n: stable at 1; Bank activity: SELF REFRESH operation; Output buffer and R_{TT}: enabled in mode registers;[2] ODT signal: midlevel
I_{DD6E}	**Self Refresh Current: Extended Temperature Range [4]** T_C: 0–95°C; Auto self refresh (ASR): disabled[4]; Self refresh temperature range (SRT): extended;[4] CKE: LOW; External clock: off; CK_t and CK_c: LOW; CL: see the previous table; BL: 8;[1] AL: 0; CS_n, command, address, group bank address, bank address, data I/O: V_{DDQ}; DM_n: stable at 1; Bank activity: EXTENDED TEMPERATURE SELF REFRESH operation; Output buffer and R_{TT}: enabled in mode registers;[2] ODT signal: midlevel
I_{PP6x}	**Self Refresh I_{pp} Current** Same conditions as I_{DD6E} above
I_{DD6R}	**Self Refresh Current: Reduced Temperature Range** T_C: 0–45°C; Auto self refresh (ASR): disabled; Self refresh temperature range (SRT): reduced;[4] CKE: LOW; External clock: off; CK_t and CK_c: LOW; CL: see the previous table; BL: 8;[1] AL: 0; CS_n, command, address, bank group address, bank address, data I/O: V_{DDQ}; DM_n: stable at 1; Bank activity: EXTENDED TEMPERATURE SELF REFRESH operation; Output buffer and R_{TT}: enabled in mode registers;[2] ODT signal: midlevel
I_{DD7}	**Operating Bank Interleave Read Current** CKE: HIGH; External clock: on; ^{t}CK, *n*RC, *n*RAS, *n*RCD, *n*RRD, *n*FAW, CL: see the previous table; BL: 8;[, 5] AL: CL - 1; CS_n: HIGH between ACT and RDA; Command, address, group bank adress, bank address inputs: partially toggling according to the I_{DD7} Measurement-Loop Pattern table; Data I/O: read data bursts with different data between one burst and the next one according to the I_{DD7} Measurement-Loop Pattern table; DM: stable at 1; Bank activity: two times interleaved cycling through banks (0, 1, ...7) with different addressing, see the I_{DD7} Measurement-Loop Pattern table; Output buffer and R_{TT}: enabled in mode registers;[2] ODT signal: stable at 0; Pattern details: see the I_{DD7} Measurement-Loop Pattern table
I_{PP7}	**Operating Bank Interleave Read I_{pp} Current** Same conditions as I_{DD7} above
I_{DD8}	**Maximum Power Down Current** Place DRAM in MPSM then CKE: HIGH; External clock: on; ^{t}CK, CL: see the previous table; BL: 8;[1] AL: 0; CS_n: stable at 1; Command, address, bank group address, bank address inputs: stable at 0; Data I/O: V_{DDQ}; DM_n: stable at 1; Bank activity: all banks closed; Output buffer and R_{TT}: Enabled in mode registers;[2] ODT signal: stable at 0

Micron Technology, Inc. reserves the right to change products or specifications without notice.
© 2018 Micron Technology, Inc. All rights reserved.

Table 137: Basic I_{DD}, I_{PP}, and I_{DDQ} Measurement Conditions

Symbol	Description
I_{DD9}	**MBIST-PPR Current** [7] Device in MBIST-PPR mode; External clock: on; CS_n: stable at 1 after MBIST-PPR entry; Command, address, bank group address, bank address inputs: stable at 1; Data I/O: V_{DDQ}; DM_n: stable at 1; Bank activity: all banks closed; Output buffer and R_{TT}: Enabled in mode registers;[2] ODT signal: stable at 0
I_{PP9}	**MBIST-PPR I_{PP} Current** Same condition with I_{DD9} above

Notes: 1. Burst length: BL8 fixed by MRS: set MR0[1:0] 00.
2. Output buffer enable: set MR1[12] 0 (output buffer enabled); set MR1[2:1] 00 ($R_{ON} = R_{ZQ}/7$); $R_{TT(NOM)}$ enable: set MR1[10:8] 011 ($R_{ZQ}/6$); $R_{TT(WR)}$ enable: set MR2[11:9] 001 ($R_{ZQ}/2$), and $R_{TT(Park)}$ enable: set MR5[8:6] 000 (disabled).
3. Auto self refresh (ASR): set MR2[6] 0 to disable or MR2[6] 1 to enable feature.
4. Self refresh temperature range (SRT): set MR2[7] 0 for normal or MR2[7] 1 for extended temperature range.
5. READ burst type: Nibble sequential, set MR0[3] 0.
6. In the dual-rank DDP case, note the following I_{DD} measurement considerations:
   - For all I_{DD} measurements except I_{DD6}, the unselected rank should be in an I_{DD2P} condition.
   - For all I_{PP} measurements except I_{PP6}, the unselected rank should be in an I_{DD3N} condition.
   - For all I_{DD6}/I_{PP6} measurements, both ranks should be in the same I_{DD6} condition.
7. When measuring I_{DD9}/I_{PP9} after entering MBIST-PPR mode and ALERT_N driving LOW, there is a chance that the DRAM may perform an internal hPPR if fails are found after internal self-test is completed and before ALERT_N fires HIGH.

Micron Technology, Inc. reserves the right to change products or specifications without notice.
© 2018 Micron Technology, Inc. All rights reserved.

Current Specifications – Patterns and Test Conditions

Current Test Definitions and Patterns

Table 138: I_{DD0} and I_{PP0} Measurement-Loop Pattern[1]

CK_t, CK_c	CKE	Sub-Loop	Cycle Number	Command	CS_n	ACT_n	RAS_n/A16	CAS_n/A15	WE_n/A14	ODT	BG[1:0][2]	BA[1:0]	A12/BC_n	A[17,13,11]]	A[10]/AP	A[9:7]	A[6:3]	A[2:0]	Data[3]
Toggling	Static High	0	0	ACT	0	0	0	0	0	0	0	0	0	0	0	0	0	0	–
			1, 2	D, D	1	0	0	0	0	0	0	0	0	0	0	0	0	0	–
			3, 4	D_n, D_n	1	1	1	1	1	0	3	3	0	0	0	7	F	0	–
			...	Repeat pattern 1...4 until *n*RAS - 1; truncate if necessary															
			*n*RAS	PRE	0	1	0	1	0	0	0	0	0	0	0	0	0	0	–
			...	Repeat pattern 1...4 until *n*RC - 1; truncate if necessary															
		1	1 × *n*RC	Repeat sub-loop 0, use BG[1:0] = 1, use BA[1:0] = 1 instead															
		2	2 × *n*RC	Repeat sub-loop 0, use BG[1:0] = 0, use BA[1:0] = 2 instead															
		3	3 × *n*RC	Repeat sub-loop 0, use BG[1:0] = 1, use BA[1:0] = 3 instead															
		4	4 × *n*RC	Repeat sub-loop 0, use BG[1:0] = 0, use BA[1:0] = 1 instead															
		5	5 × *n*RC	Repeat sub-loop 0, use BG[1:0] = 1, use BA[1:0] = 2 instead															
		6	6 × *n*RC	Repeat sub-loop 0, use BG[1:0] = 0, use BA[1:0] = 3 instead															
		7	7 × *n*RC	Repeat sub-loop 0, use BG[1:0] = 1, use BA[1:0] = 0 instead															
		8	8 × *n*RC	Repeat sub-loop 0, use BG[1:0] = 2, use BA[1:0] = 0 instead[4]															
		9	9 × *n*RC	Repeat sub-loop 0, use BG[1:0] = 3, use BA[1:0] = 1 instead[4]															
		10	10 × *n*RC	Repeat sub-loop 0, use BG[1:0] = 2, use BA[1:0] = 2 instead[4]															
		11	11 × *n*RC	Repeat sub-loop 0, use BG[1:0] = 3, use BA[1:0] = 3 instead[4]															
		12	12 × *n*RC	Repeat sub-loop 0, use BG[1:0] = 2, use BA[1:0] = 1 instead[4]															
		13	13 × *n*RC	Repeat sub-loop 0, use BG[1:0] = 3, use BA[1:0] = 2 instead[4]															
		14	14 × *n*RC	Repeat sub-loop 0, use BG[1:0] = 2, use BA[1:0] = 3 instead[4]															
		15	15 × *n*RC	Repeat sub-loop 0, use BG[1:0] = 3, use BA[1:0] = 0 instead[4]															

Notes: 1. DQS_t, DQS_c are V_{DDQ}.
2. BG1 is a "Don't Care" for x16 devices.
3. DQ signals are V_{DDQ}.
4. For x4 and x8 only.

Micron Technology, Inc. reserves the right to change products or specifications without notice.
© 2018 Micron Technology, Inc. All rights reserved.

Table 139: I_{DD1} Measurement – Loop Pattern[1]

CK_c, CK_t,	CKE	Sub-Loop	Cycle Number	Command	CS_n	ACT_n	RAS_n/A16	CAS_n/A15	WE_n/A14	ODT	BG[1:0][2]	BA[1:0]	A12/BC_n	A[17,13,11]]	A[10]/AP	A[9:7]	A[6:3]	A[2:0]	Data[3]
Toggling	Static High	0	0	ACT	0	0	0	0	0	0	0	0	0	0	0	0	0	0	–
			1, 2	D, D	1	0	0	0	0	0	0	0	0	0	0	0	0	0	–
			3, 4	D_n, D_n	1	1	1	1	1	0	3	3	0	0	0	7	F	0	–
			...	Repeat pattern 1...4 until *n*RCD - AL - 1; truncate if necessary															
			*n*RCD - AL	RD	0	1	1	0	1	0	0	0	0	0	0	0	0	0	D0 = 00, D1 = FF, D2 = FF, D3 = 00, D4 = FF, D5 = 00, D5 = 00, D7 = FF
			...	Repeat pattern 1...4 until *n*RAS - 1; truncate if necessary															
			*n*RAS	PRE	0	1	0	1	0	0	0	0	0	0	0	0	0	0	
			...	Repeat pattern 1...4 until *n*RC - 1; truncate if necessary															
		1	1 × *n*RC + 0	ACT	0	0	0	1	1	0	1	1	0	0	0	0	0	0	–
			1 × *n*RC + 1, 2	D, D	1	0	0	0	0	0	0	0	0	0	0	0	0	0	–
			1 × *n*RC + 3, 4	D_n, D_n	1	1	1	1	1	0	3	3	0	0	0	7	F	0	–
			...	Repeat pattern *n*RC + 1...4 until 1 × *n*RC + *n*RAS - 1; truncate if necessary															
			1 × *n*RC+*n*RCD - AL	RD	0	1	1	0	1	0	1	1	0	0	0	0	0	0	D0 = FF, D1 = 00, D2 = 00, D3 = FF, D4 = 00, D5 = FF, D5 = FF, D7 = 00
			...	Repeat pattern 1...4 until *n*RAS - 1; truncate if necessary															
			1 × *n*RC + *n*RAS	PRE	0	1	0	1	0	0	1	1	0	0	0	0	0	0	
			...	Repeat pattern *n*RC + 1...4 until 2 × *n*RC - 1; truncate if necessary															
		2	2 × *n*RC	Repeat sub-loop 0, use BG[1:0] = 0, use BA[1:0] = 2 instead															
		3	3 × *n*RC	Repeat sub-loop 0, use BG[1:0] = 1, use BA[1:0] = 3 instead															
		4	4 × *n*RC	Repeat sub-loop 0, use BG[1:0] = 0, use BA[1:0] = 1 instead															
		5	5 × *n*RC	Repeat sub-loop 0, use BG[1:0] = 1, use BA[1:0] = 2 instead															
		6	6 × *n*RC	Repeat sub-loop 0, use BG[1:0] = 0, use BA[1:0] = 3 instead															
		7	7 × *n*RC	Repeat sub-loop 0, use BG[1:0] = 1, use BA[1:0] = 0 instead															
		8	9 × *n*RC	Repeat sub-loop 0, use BG[1:0] = 2, use BA[1:0] = 0 instead[4]															
		9	10 × *n*RC	Repeat sub-loop 0, use BG[1:0] = 3, use BA[1:0] = 1 instead[4]															
		10	11 × *n*RC	Repeat sub-loop 0, use BG[1:0] = 2, use BA[1:0] = 2 instead[4]															
		11	12 × *n*RC	Repeat sub-loop 0, use BG[1:0] = 3, use BA[1:0] = 3 instead[4]															
		12	13 × *n*RC	Repeat sub-loop 0, use BG[1:0] = 2, use BA[1:0] = 1 instead[4]															

Micron Technology, Inc. reserves the right to change products or specifications without notice.
© 2018 Micron Technology, Inc. All rights reserved.

Table 139: I_{DD1} Measurement – Loop Pattern[1]

CK_c, CK_t,	CKE	Sub-Loop	Cycle Number	Command	CS_n	ACT_n	RAS_n/A16	CAS_n/A15	WE_n/A14	ODT	BG[1:0][2]	BA[1:0]	A12/BC_n	A[17,13,11]]	A[10]/AP	A[9:7]	A[6:3]	A[2:0]	Data[3]
Toggling	Static High	13	14 × *n*RC	Repeat sub-loop 0, use BG[1:0] = 3, use BA[1:0] = 2 instead[4]															
		14	15 × *n*RC	Repeat sub-loop 0, use BG[1:0] = 2, use BA[1:0] = 3 instead[4]															
		15	16 × *n*RC	Repeat sub-loop 0, use BG[1:0] = 3, use BA[1:0] = 0 instead[4]															

Notes: 1. DQS_t, DQS_c are V_{DDQ} when not toggling.
2. BG1 is a "Don't Care" for x16 devices.
3. DQ signals are V_{DDQ} except when burst sequence drives each DQ signal by a READ command.
4. For x4 and x8 only.

Table 140: I_{DD2N}, I_{DD3N}, and I_{PP3P} Measurement – Loop Pattern[1]

CK_c, CK_t,	CKE	Sub-Loop	Cycle Number	Command	CS_n	ACT_n	RAS_n/A16	CAS_n/A15	WE_n/A14	ODT	BG[1:0][2]	BA[1:0]	A12/BC_n	A[17,13,11]]	A[10]/AP	A[9:7]	A[6:3]	A[2:0]	Data[3]
Toggling	Static High	0	0	D	1	0	0	0	0	0	0	0	0	0	0	0	0	0	–
			1	D	1	0	0	0	0	0	0	0	0	0	0	0	0	0	–
			2	D_n	1	1	1	1	1	0	3	3	0	0	0	7	F	0	–
			3	D_n	1	1	1	1	1	0	3	3	0	0	0	7	F	0	–
		1	4–7	Repeat sub-loop 0, use BG[1:0] = 1, use BA[1:0] = 1 instead															
		2	8–11	Repeat sub-loop 0, use BG[1:0] = 0, use BA[1:0] = 2 instead															
		3	12–15	Repeat sub-loop 0, use BG[1:0] = 1, use BA[1:0] = 3 instead															
		4	16–19	Repeat sub-loop 0, use BG[1:0] = 0, use BA[1:0] = 1 instead															
		5	20–23	Repeat sub-loop 0, use BG[1:0] = 1, use BA[1:0] = 2 instead															
		6	24–27	Repeat sub-loop 0, use BG[1:0] = 0, use BA[1:0] = 3 instead															
		7	28–31	Repeat sub-loop 0, use BG[1:0] = 1, use BA[1:0] = 0 instead															
		8	32–35	Repeat sub-loop 0, use BG[1:0] = 2, use BA[1:0] = 0 instead[4]															
		9	36–39	Repeat sub-loop 0, use BG[1:0] = 3, use BA[1:0] = 1 instead[4]															
		10	40–43	Repeat sub-loop 0, use BG[1:0] = 2, use BA[1:0] = 2 instead[4]															
		11	44–47	Repeat sub-loop 0, use BG[1:0] = 3, use BA[1:0] = 3 instead[4]															
		12	48–51	Repeat sub-loop 0, use BG[1:0] = 2, use BA[1:0] = 1 instead[4]															
		13	52–55	Repeat sub-loop 0, use BG[1:0] = 3, use BA[1:0] = 2 instead[4]															
		14	56–59	Repeat sub-loop 0, use BG[1:0] = 2, use BA[1:0] = 3 instead[4]															
		15	60–63	Repeat sub-loop 0, use BG[1:0] = 3, use BA[1:0] = 0 instead[4]															

Notes: 1. DQS_t, DQS_c are V_{DDQ}.

Micron Technology, Inc. reserves the right to change products or specifications without notice.
© 2018 Micron Technology, Inc. All rights reserved.

2. BG1 is a "Don't Care" for x16 devices.
3. DQ signals are V_{DDQ}.
4. For x4 and x8 only.

Micron Technology, Inc. reserves the right to change products or specifications without notice.
© 2018 Micron Technology, Inc. All rights reserved.

Table 141: I_{DD2NT} Measurement – Loop Pattern[1]

CK_c, CK_t,	CKE	Sub-Loop	Cycle Number	Command	CS_n	ACT_n	RAS_n/A16	CAS_n/A15	WE_n/A14	ODT	BG[1:0][2]	BA[1:0]	A12/BC_n	A[17,13,11]]	A[10]/AP	A[9:7]	A[6:3]	A[2:0]	Data[3]
Toggling	Static High	0	0	D	1	0	0	0	0	0	0	0	0	0	0	0	0	0	–
			1	D	1	0	0	0	0	0	0	0	0	0	0	0	0	0	–
			2	D_n	1	1	1	1	1	0	3	3	0	0	0	7	F	0	–
			3	D_n	1	1	1	1	1	0	3	3	0	0	0	7	F	0	–
		1	4–7	Repeat sub-loop 0 with ODT = 1, use BG[1:0] = 1, use BA[1:0] = 1 instead															
		2	8–11	Repeat sub-loop 0 with ODT = 0, use BG[1:0] = 0, use BA[1:0] = 2 instead															
		3	12–15	Repeat sub-loop 0 with ODT = 1, use BG[1:0] = 1, use BA[1:0] = 3 instead															
		4	16–19	Repeat sub-loop 0 with ODT = 0, use BG[1:0] = 0, use BA[1:0] = 1 instead															
		5	20–23	Repeat sub-loop 0 with ODT = 1, use BG[1:0] = 1, use BA[1:0] = 2 instead															
		6	24–27	Repeat sub-loop 0 with ODT = 0, use BG[1:0] = 0, use BA[1:0] = 3 instead															
		7	28–31	Repeat sub-loop 0 with ODT = 1, use BG[1:0] = 1, use BA[1:0] = 0 instead															
		8	32–35	Repeat sub-loop 0 with ODT = 0, use BG[1:0] = 2, use BA[1:0] = 0 instead[4]															
		9	36–39	Repeat sub-loop 0 with ODT = 1, use BG[1:0] = 3, use BA[1:0] = 1 instead[4]															
		10	40–43	Repeat sub-loop 0 with ODT = 0, use BG[1:0] = 2, use BA[1:0] = 2 instead[4]															
		11	44–47	Repeat sub-loop 0 with ODT = 1, use BG[1:0] = 3, use BA[1:0] = 3 instead[4]															
		12	48–51	Repeat sub-loop 0 with ODT = 0, use BG[1:0] = 2, use BA[1:0] = 1 instead[4]															
		13	52–55	Repeat sub-loop 0 with ODT = 1, use BG[1:0] = 3, use BA[1:0] = 2 instead[4]															
		14	56–59	Repeat sub-loop 0 with ODT = 0, use BG[1:0] = 2, use BA[1:0] = 3 instead[4]															
		15	60–63	Repeat sub-loop 0 with ODT = 1, use BG[1:0] = 3, use BA[1:0] = 0 instead[4]															

Notes: 1. DQS_t, DQS_c are V_{SSQ}.
2. BG1 is a "Don't Care" for x16 devices.
3. DQ signals are V_{SSQ}.
4. For x4 and x8 only.

Micron Technology, Inc. reserves the right to change products or specifications without notice.
© 2018 Micron Technology, Inc. All rights reserved.

Table 142: I_{DD4R} Measurement – Loop Pattern[1]

CK_c, CK_t,	CKE	Sub-Loop	Cycle Number	Command	CS_n	ACT_n	RAS_n/A16	CAS_n/A15	WE_n/A14	ODT	BG[1:0][2]	BA[1:0]	A12/BC_n	A[17,13,11]]	A[10]/AP	A[9:7]	A[6:3]	A[2:0]	Data[3]
Toggling	Static High	0	0	RD	0	1	1	0	1	0	0	0	0	0	0	0	0	0	D0 = 00, D1 = FF, D2 = FF, D3 = 00, D4 = FF, D5 = 00, D5 = 00, D7 = FF
			1	D	1	0	0	0	0	0	0	0	0	0	0	0	0	0	
			2, 3	D_n, D_n	1	1	1	1	1	0	3	3	0	0	0	7	F	0	
		1	4	RD	0	1	1	0	1	0	1	1	0	0	0	7	F	0	D0 = FF, D1 = 00 D2 = 00, D3 = FF D4 = 00, D5 = FF D5 = FF, D7 = 00
			5	D	1	0	0	0	0	0	0	0	0	0	0	0	0	0	
			6, 7	D_n, D_n	1	1	1	1	1	0	3	3	0	0	0	7	F	0	
		2	8–11	Repeat sub-loop 0, use BG[1:0] = 0, use BA[1:0] = 2 instead															
		3	12–15	Repeat sub-loop 1, use BG[1:0] = 1, use BA[1:0] = 3 instead															
		4	16–19	Repeat sub-loop 0, use BG[1:0] = 0, use BA[1:0] = 1 instead															
		5	20–23	Repeat sub-loop 1, use BG[1:0] = 1, use BA[1:0] = 2 instead															
		6	24–27	Repeat sub-loop 0, use BG[1:0] = 0, use BA[1:0] = 3 instead															
		7	28–31	Repeat sub-loop 1, use BG[1:0] = 1, use BA[1:0] = 0 instead															
		8	32–35	Repeat sub-loop 0, use BG[1:0] = 2, use BA[1:0] = 0 instead[4]															
		9	36–39	Repeat sub-loop 1, use BG[1:0] = 3, use BA[1:0] = 1 instead[4]															
		10	40–43	Repeat sub-loop 0, use BG[1:0] = 2, use BA[1:0] = 2 instead[4]															
		11	44–47	Repeat sub-loop 1, use BG[1:0] = 3, use BA[1:0] = 3 instead[4]															
		12	48–51	Repeat sub-loop 0, use BG[1:0] = 2, use BA[1:0] = 1 instead[4]															
		13	52–55	Repeat sub-loop 1, use BG[1:0] = 3, use BA[1:0] = 2 instead[4]															
		14	56–59	Repeat sub-loop 0, use BG[1:0] = 2, use BA[1:0] = 3 instead[4]															
		15	60–63	Repeat sub-loop 1, use BG[1:0] = 3, use BA[1:0] = 0 instead[4]															

Notes: 1. DQS_t, DQS_c are V_{DDQ} when not toggling.
2. BG1 is a "Don't Care" for x16 devices.
3. Burst sequence driven on each DQ signal by a READ command. Outside burst operation, DQ signals are V_{DDQ}.
4. For x4 and x8 only.

Micron Technology, Inc. reserves the right to change products or specifications without notice.
© 2018 Micron Technology, Inc. All rights reserved.

Table 143: I_{DD4W} Measurement – Loop Pattern[1]

CK_c, CK_t,	CKE	Sub-Loop	Cycle Number	Command	CS_n	ACT_n	RAS_n/A16	CAS_n/A15	WE_n/A14	ODT	BG[1:0][2]	BA[1:0]	A12/BC_n	A[17,13,11]]	A[10]/AP	A[9:7]	A[6:3]	A[2:0]	Data[3]
Toggling	Static High	0	0	WR	0	1	1	0	0	1	0	0	0	0	0	0	0	0	D0 = 00, D1 = FF, D2 = FF, D3 = 00, D4 = FF, D5 = 00, D5 = 00, D7 = FF
			1	D	1	0	0	0	0	1	0	0	0	0	0	0	0	0	
			2, 3	D_n, D_n	1	1	1	1	0	1	3	3	0	0	0	7	F	0	
		1	4	WR	0	1	1	0	0	1	1	1	0	0	0	7	F	0	D0 = FF, D1 = 00 D2 = 00, D3 = FF D4 = 00, D5 = FF D5 = FF, D7 = 00
			5	D	1	0	0	0	0	1	0	0	0	0	0	0	0	0	
			6, 7	D_n, D_n	1	1	1	1	0	1	3	3	0	0	0	7	F	0	
		2	8–11	Repeat sub-loop 0, use BG[1:0] = 0, use BA[1:0] = 2 instead															
		3	12–15	Repeat sub-loop 1, use BG[1:0] = 1, use BA[1:0] = 3 instead															
		4	16–19	Repeat sub-loop 0, use BG[1:0] = 0, use BA[1:0] = 1 instead															
		5	20–23	Repeat sub-loop 1, use BG[1:0] = 1, use BA[1:0] = 2 instead															
		6	24–27	Repeat sub-loop 0, use BG[1:0] = 0, use BA[1:0] = 3 instead															
		7	28–31	Repeat sub-loop 1, use BG[1:0] = 1, use BA[1:0] = 0 instead															
		8	32–35	Repeat sub-loop 0, use BG[1:0] = 2, use BA[1:0] = 0 instead[4]															
		9	36–39	Repeat sub-loop 1, use BG[1:0] = 3, use BA[1:0] = 1 instead[4]															
		10	40–43	Repeat sub-loop 0, use BG[1:0] = 2, use BA[1:0] = 2 instead[4]															
		11	44–47	Repeat sub-loop 1, use BG[1:0] = 3, use BA[1:0] = 3 instead[4]															
		12	48–51	Repeat sub-loop 0, use BG[1:0] = 2, use BA[1:0] = 1 instead[4]															
		13	52–55	Repeat sub-loop 1, use BG[1:0] = 3, use BA[1:0] = 2 instead[4]															
		14	56–59	Repeat sub-loop 0, use BG[1:0] = 2, use BA[1:0] = 3 instead[4]															
		15	60–63	Repeat sub-loop 1, use BG[1:0] = 3, use BA[1:0] = 0 instead[4]															

Notes: 1. DQS_t, DQS_c are V_{DDQ} when not toggling.
2. BG1 is a "Don't Care" for x16 devices.
3. Burst sequence driven on each DQ signal by WRITE command. Outside burst operation, DQ signals are V_{DDQ}.
4. For x4 and x8 only.

Micron Technology, Inc. reserves the right to change products or specifications without notice.
© 2018 Micron Technology, Inc. All rights reserved.

Table 144: I_{DD4Wc} Measurement – Loop Pattern[1]

CK_c, CK_t,	CKE	Sub-Loop	Cycle Number	Command	CS_n	ACT_n	RAS_n/A16	CAS_n/A15	WE_n/A14	ODT	BG[1:0][3]	BA[1:0]	A12/BC_n	A[17,13,11]]	A[10]/AP	A[9:7]	A[6:3]	A[2:0]	Data[4]
Toggling	Static High	0	0	WR	0	1	1	0	0	1	0	0	0	0	0	0	0	0	D0 = 00, D1 = FF, D2 = FF, D3 = 00, D4 = FF, D5 = 00, D8 = CRC
			1, 2	D, D	1	0	0	0	0	1	0	0	0	0	0	0	0	0	
			3, 4	D_n, D_n	1	1	1	1	0	1	3	3	0	0	0	7	F	0	
		1	5	WR	0	1	1	0	0	1	1	1	0	0	0	7	F	0	D0 = FF, D1 = 00, D2 = 00, D3 = FF, D4 = 00, D5 = FF, D5 = FF, D7 = 00 D8 = CRC
			6, 7	D, D	1	0	0	0	0	1	0	0	0	0	0	0	0	0	
			8, 9	D_n, D_n	1	1	1	1	0	1	3	3	0	0	0	7	F	0	
		2	10–14	Repeat sub-loop 0, use BG[1:0] = 0, use BA[1:0] = 2 instead															
		3	15–19	Repeat sub-loop 1, use BG[1:0] = 1, use BA[1:0] = 3 instead															
		4	20–24	Repeat sub-loop 0, use BG[1:0] = 0, use BA[1:0] = 1 instead															
		5	25–29	Repeat sub-loop 1, use BG[1:0] = 1, use BA[1:0] = 2 instead															
		6	30–34	Repeat sub-loop 0, use BG[1:0] = 0, use BA[1:0] = 3 instead															
		7	35–39	Repeat sub-loop 1, use BG[1:0] = 1, use BA[1:0] = 0 instead															
		8	40–44	Repeat sub-loop 0, use BG[1:0] = 2, use BA[1:0] = 0 instead[4]															
		9	45–49	Repeat sub-loop 1, use BG[1:0] = 3, use BA[1:0] = 1 instead[4]															
		10	50–54	Repeat sub-loop 0, use BG[1:0] = 2, use BA[1:0] = 2 instead[4]															
		11	55–59	Repeat sub-loop 1, use BG[1:0] = 3, use BA[1:0] = 3 instead[4]															
		12	60–64	Repeat sub-loop 0, use BG[1:0] = 2, use BA[1:0] = 1 instead[4]															
		13	65–69	Repeat sub-loop 1, use BG[1:0] = 3, use BA[1:0] = 2 instead[4]															
		14	70–74	Repeat sub-loop 0, use BG[1:0] = 2, use BA[1:0] = 3 instead[4]															
		15	75–79	Repeat sub-loop 1, use BG[1:0] = 3, use BA[1:0] = 0 instead[4]															

Notes: 1. Pattern provided for reference only.
2. DQS_t, DQS_c are V_{DDQ} when not toggling.
3. BG1 is a "Don't Care" for x16 devices.
4. Burst sequence driven on each DQ signal by WRITE command. Outside burst operation, DQ signals are V_{DDQ}.
5. For x4 and x8 only.

Micron Technology, Inc. reserves the right to change products or specifications without notice.
© 2018 Micron Technology, Inc. All rights reserved.

Table 145: I_{DD5R} Measurement – Loop Pattern[1]

CK_c, CK_t,	CKE	Sub-Loop	Cycle Number	Command	CS_n	ACT_n	RAS_n/A16	CAS_n/A15	WE_n/A14	ODT	BG[1:0][2]	BA[1:0]	A12/BC_n	A[17,13,11]]	A[10]/AP	A[9:7]	A[6:3]	A[2:0]	Data[3]
Toggling	Static High	0	0	REF	0	1	0	0	1	0	0	0	0	0	0	0	0	0	–
		1	1	D	1	0	0	0	0	0	0	0	0	0	0	0	0	0	–
			2	D	1	0	0	0	0	0	0	0	0	0	0	0	0	0	–
			3	D_n	1	1	1	1	1	0	3	3	0	0	0	7	F	0	–
			4	D_n	1	1	1	1	1	0	3	3	0	0	0	7	F	0	–
			5–8	Repeat pattern 1...4, use BG[1:0] = 1, use BA[1:0] = 1 instead															
			9–12	Repeat pattern 1...4, use BG[1:0] = 0, use BA[1:0] = 2 instead															
			13–16	Repeat pattern 1...4, use BG[1:0] = 1, use BA[1:0] = 3 instead															
			17–20	Repeat pattern 1...4, use BG[1:0] = 0, use BA[1:0] = 1 instead															
			21–24	Repeat pattern 1...4, use BG[1:0] = 1, use BA[1:0] = 2 instead															
			25–28	Repeat pattern 1...4, use BG[1:0] = 0, use BA[1:0] = 3 instead															
			29–32	Repeat pattern 1...4, use BG[1:0] = 1, use BA[1:0] = 0 instead															
			33–36	Repeat pattern 1...4, use BG[1:0] = 2, use BA[1:0] = 0 instead[4]															
			37–40	Repeat pattern 1...4, use BG[1:0] = 3, use BA[1:0] = 1 instead[4]															
			41–44	Repeat pattern 1...4, use BG[1:0] = 2, use BA[1:0] = 2 instead[4]															
			45–48	Repeat pattern 1...4, use BG[1:0] = 3, use BA[1:0] = 3 instead[4]															
			49–52	Repeat pattern 1...4, use BG[1:0] = 2, use BA[1:0] = 1 instead[4]															
			53–56	Repeat pattern 1...4, use BG[1:0] = 3, use BA[1:0] = 2 instead[4]															
			57–60	Repeat pattern 1...4, use BG[1:0] = 2, use BA[1:0] = 3 instead[4]															
			61–64	Repeat pattern 1...4, use BG[1:0] = 3, use BA[1:0] = 0 instead[4]															
		2	65...*n*REFI - 1	Repeat sub-loop 1; truncate if necessary															

Notes: 1. DQS_t, DQS_c are V_{DDQ}.
2. BG1 is a "Don't Care" for x16 devices.
3. DQ signals are V_{DDQ}.
4. For x4 and x8 only.

Micron Technology, Inc. reserves the right to change products or specifications without notice.
© 2018 Micron Technology, Inc. All rights reserved.

Table 146: I_{DD7} Measurement – Loop Pattern[1]

CK_t, CK_c	CKE	Sub-Loop	Cycle Number	Command	CS_n	ACT_n	RAS_n/A16	CAS_n/A15	WE_n/A14	ODT	BG[1:0][2]	BA[1:0]	A12/BC_n	A[17,13,11]]	A[10]/AP	A[9:7]	A[6:3]	A[2:0]	Data[3]
Toggling	Static High	0	0	ACT	0	0	0	0	0	0	0	0	0	0	0	0	0	0	–
			1	RDA	0	1	1	0	1	0	0	0	0	0	1	0	0	0	
			2	D	1	0	0	0	0	0	0	0	0	0	0	0	0	0	–
			3	D_n	1	1	1	1	1	0	3	3	0	0	0	7	F	0	–
			...	Repeat pattern 2...3 until *n*RRD - 1, if *n*RRD > 4. Truncate if necessary															
		1	*n*RRD	ACT	0	0	0	0	0	0	1	1	0	0	0	0	0	0	–
			*n*RRD+1	RDA	0	1	1	0	1	0	1	1	0	0	1	0	0	0	
			...	Repeat pattern 2...3 until 2 × *n*RRD - 1, if *n*RRD > 4. Truncate if necessary															
		2	2 × *n*RRD	Repeat sub-loop 0, use BG[1:0] = 0, use BA[1:0] = 2 instead															
		3	3 × *n*RRD	Repeat sub-loop 1, use BG[1:0] = 1, use BA[1:0] = 3 instead															
		4	4 × *n*RRD	Repeat pattern 2...3 until *n*FAW - 1, if *n*FAW > 4 × *n*RRD. Truncate if necessary															
		5	*n*FAW	Repeat sub-loop 0, use BG[1:0] = 0, use BA[1:0] = 1 instead															
		6	*n*FAW + *n*RRD	Repeat sub-loop 1, use BG[1:0] = 1, use BA[1:0] = 2 instead															
		7	*n*FAW + 2 × *n*RRD	Repeat sub-loop 0, use BG[1:0] = 0, use BA[1:0] = 3 instead															
		8	*n*FAW + 3 × *n*RRD	Repeat sub-loop 1, use BG[1:0] = 1, use BA[1:0] = 0 instead															
		9	*n*FAW + 4 × *n*RRD	Repeat sub-loop 4															
		10	2 × *n*FAW	Repeat sub-loop 0, use BG[1:0] = 2, use BA[1:0] = 0 instead															
		11	2 × *n*FAW + *n*RRD	Repeat sub-loop 1, use BG[1:0] = 3, use BA[1:0] = 1 instead															
		12	2 × *n*FAW + 2 × *n*RRD	Repeat sub-loop 0, use BG[1:0] = 2, use BA[1:0] = 2 instead															
		13	2 × *n*FAW + 3 × *n*RRD	Repeat sub-loop 1, use BG[1:0] = 3, use BA[1:0] = 3 instead															
		14	2 × *n*FAW + 4 × *n*RRD	Repeat sub-loop 4															
		15	3 × *n*FAW	Repeat sub-loop 0, use BG[1:0] = 2, use BA[1:0] = 1 instead															
		16	3 × *n*FAW + *n*RRD	Repeat sub-loop 1, use BG[1:0] = 3, use BA[1:0] = 2 instead															
		17	3 × *n*FAW + 2 × *n*RRD	Repeat sub-loop 0, use BG[1:0] = 2, use BA[1:0] = 3 instead															
		18	3 × *n*FAW + 3 × *n*RRD	Repeat sub-loop 1, use BG[1:0] = 3, use BA[1:0] = 0 instead															
		19	3 × *n*FAW + 4 × *n*RRD	Repeat sub-loop 4															
		20	4 × *n*FAW	Repeat pattern 2...3 until *n*RC - 1, if *n*RC > 4 × *n*FAW. Truncate if necessary															

Notes: 1. DQS_t, DQS_c are V_{DDQ}.
2. BG1 is a "Don't Care" for x16 devices.
3. DQ signals are V_{DDQ} except when burst sequence drives each DQ signal by a READ command.
4. For x4 and x8 only.

Micron Technology, Inc. reserves the right to change products or specifications without notice.
© 2018 Micron Technology, Inc. All rights reserved.

I_{DD} Specifications

Table 147: Timings used for I_{DD}, I_{PP}, and I_{DDQ} Measurement – Loop Patterns

Symbol		DDR4-1600			DDR4-1866			DDR4-2133			DDR4-2400			DDR4-2666			DDR4-2933			DDR4-3200			Unit
		10-10-10	11-11-11	12-12-12	12-12-12	13-13-13	14-14-14	14-14-14	15-15-15	16-16-16	16-16-16	17-17-17	18-18-18	18-18-18	19-19-19	20-20-20	20-20-20	21-21-21	22-22-22	20-20-20	22-22-22	24-24-24	
^{t}CK		1.25			1.071			0.937			0.833			0.75			0.682			0.625			ns
CL		10	11	12	12	13	14	14	15	16	16	17	18	18	19	20	20	21	22	20	22	24	CK
CWL		9	11	11	10	12	12	11	14	14	16	16	16	18	18	18	14	18	18	16	20	20	CK
*n*RCD		10	11	12	12	13	14	14	15	16	16	17	18	18	19	20	19	20	21	20	22	24	CK
*n*RC		38	39	40	44	45	46	50	51	52	55	56	57	61	62	63	66	67	68	72	74	76	CK
*n*RP		10	11	12	12	13	14	14	15	16	16	17	18	18	19	20	19	20	21	20	22	24	CK
*n*RAS		28			32			36			39			43			47			52			CK
*n*FAW	x4[1]	16			16			16			16			16			16			16			CK
	x8	20			22			23			26			28			31			34			CK
	x16	28			28			32			36			40			44			48			CK
*n*RRD_S	x4	4			4			4			4			4			4			4			CK
	x8	4			4			4			4			4			4			4			CK
	x16	5			6			6			7			8			8			9			CK
*n*RRD_L	x4	5			5			6			6			7			8			8			CK
	x8	5			5			6			6			7			8			8			CK
	x16	6			6			7			8			9			10			11			CK
*n*CCD_S		4			4			4			4			4			4			4			CK
*n*CCD_L		5			5			6			6			7			8			8			CK
*n*WTR_S		2			3			3			3			4			4			4			CK
*n*WTR_L		6			7			8			9			10			11			12			CK
*n*REFI		6,240			7,283			8,325			9,364			10,400			11,437			12,480			CK
*n*RFC 2Gb		128			150			171			193			214			235			256			CK
*n*RFC 4Gb		208			243			278			313			347			382			416			CK
*n*RFC 8Gb		280			327			374			421			467			514			560			CK
*n*RFC 16Gb		280			327			374			421			467			514			560			CK

Notes: 1. 1KB based x4 use same numbers of clocks for *n*FAW as the x8.

Micron Technology, Inc. reserves the right to change products or specifications without notice.
© 2018 Micron Technology, Inc. All rights reserved.

Current Specifications – Limits

Table 148: I_{DD} and I_{PP} Current Limits; Die Rev. B (-40° ≤ T_C ≤ 85°C)

Symbol	Width	DDR4-2133	DDR4-2400	DDR4-2666	DDR4-2933	DDR4-3200	Unit
I_{DD0}: One bank ACTIVATE-to-PRECHARGE current	x4	56	57	58	59	60	mA
	x8	59	60	61	62	63	mA
	x16	74	75	76	77	78	mA
I_{PP0}: One bank ACTIVATE-to-PRECHARGE I_{PP} current	x4, x8	4	4	4	4	4	mA
	x16	5	5	5	5	5	mA
I_{DD1}: One bank ACTIVATE-to-READ-to- PRECHARGE current	x4	66	67	68	69	70	mA
	x8	70	71	72	73	74	mA
	x16	95	96	97	98	99	mA
I_{DD2N}: Precharge standby current	ALL	48	49	50	51	52	mA
I_{DD2NT}: Precharge standby ODT current	x4, x8	52	53	54	55	56	mA
	x16	61	62	63	64	65	mA
I_{DD2P}: Precharge power-down current	ALL	43	43	43	43	43	mA
I_{DD2Q}: Precharge quiet standby current	ALL	47	47	47	47	47	mA
I_{DD3N}: Active standby current	x4	74	75	76	77	78	mA
	x8	76	77	78	79	80	mA
	x16	77	78	79	80	81	mA
I_{PP3N}: Active standby I_{PP} current	ALL	3	3	3	3	3	mA
I_{DD3P}: Active power-down current	x4	65	66	67	68	69	mA
	x8	66	67	68	69	69	mA
	x16	68	69	70	71	72	mA
I_{DD4R}: Burst read current	x4	138	147	155	164	172	mA
	x8	162	172	182	192	202	mA
	x16	242	262	284	305	326	mA
I_{DD4W}: Burst write current	x4	135	142	149	157	164	mA
	x8	150	158	166	175	183	mA
	x16	209	223	240	257	274	mA
I_{DD5R}: Distributed refresh current (1X REF)	ALL	81	81	81	81	81	mA
I_{PP5R}: Distributed refresh I_{PP} current (1X REF)	ALL	5	5	5	5	5	mA
I_{DD6N}: Self refresh current; -40–85°C [1]	ALL	74	74	74	74	74	mA

Micron Technology, Inc. reserves the right to change products or specifications without notice.
© 2018 Micron Technology, Inc. All rights reserved.

Table 148: I_{DD} and I_{PP} Current Limits; Die Rev. B (-40° ≤ T_C ≤ 85°C)

Symbol	Width	DDR4-2133	DDR4-2400	DDR4-2666	DDR4-2933	DDR4-3200	Unit
I_{DD6E}: Self refresh current; -40–95°C [2, 4]	ALL	129	129	129	129	129	mA
I_{DD6R}: Self refresh current; -40–45C [3, 4]	ALL	26	26	26	26	26	mA
I_{DD6A}: Auto self refresh current (25°C)[4]	ALL	15	15	15	15	15	mA
I_{DD6A}: Auto self refresh current (45°C)[4]	ALL	26	26	26	26	26	mA
I_{DD6A}: Auto self refresh current (75°C)[4]	ALL	73	73	73	73	73	mA
I_{DD6A}: Auto self refresh current (95°C)[4]	ALL	129	129	129	129	129	mA
I_{PP6x}: Auto self refresh I_{PP} current; -40–95°C[28]	ALL	9	9	9	9	9	mA
I_{DD7}: Bank interleave read current	x4	187	196	208	220	234	mA
	x8	183	185	190	193	196	mA
	x16	255	260	260	267	268	mA
I_{PP7}: Bank interleave read I_{PP} current	x4	11	11	11	11	11	mA
	x8	10	10	10	10	10	mA
	x16	11	11	11	11	11	mA
I_{DD8}: Maximum power-down current	ALL	40	40	40	40	40	mA

Notes:
1. Applicable for MR2 settings A7 = 0 and A6 = 0; manual mode with normal temperature range of operation (-40–85°C).
2. Applicable for MR2 settings A7 = 1 and A6 = 0; manual mode with extended temperature range of operation (-40–95°C).
3. Applicable for MR2 settings A7 = 0 and A6 = 1; manual mode with reduced temperature range of operation (-40–45°C).
4. I_{DD6R}, I_{DD6A}, and I_{DD6E} values are verified by design and characterization, and may not be subject to production test.
5. When additive latency is enabled for I_{DD0}, current changes by approximately +1%.
6. When additive latency is enabled for I_{DD1}, current changes by approximately +8%.
7. When additive latency is enabled for I_{DD2N}, current changes by approximately +1%.
8. When DLL is disabled for I_{DD2N}, current changes by approximately –6%.
9. When CAL is enabled for I_{DD2N}, current changes by approximately –20%.
10. When gear-down is enabled for I_{DD2N}, current changes by approximately 0%.
11. When CA parity is enabled for I_{DD2N}, current changes by approximately +13%.
12. When additive latency is enabled for I_{DD3N}, current changes by approximately +1%.
13. When additive latency is enabled for I_{DD4R}, current changes by approximately +4%(x4/x8), +3%(X16).
14. When read DBI is enabled for I_{DD4R}, current changes by approximately -12%(x4/x8), -20%(x16).
15. When additive latency is enabled for I_{DD4W}, current changes by approximately +4%(x4/x8), +3%(x16).
16. When write DBI is enabled for I_{DD4W}, current changes by approximately 0%.

Micron Technology, Inc. reserves the right to change products or specifications without notice.
© 2018 Micron Technology, Inc. All rights reserved.

17. When write CRC is enabled for I_{DD4W}, current changes by approximately -5%.
18. When CA parity is enabled for I_{DD4W}, current changes by approximately +12%.
19. When 2X REF is enabled for I_{DD5R}, current changes by approximately 0%.
20. When 4X REF is enabled for I_{DD5R}, current changes by approximately 0%.
21. When 2X REF is enabled for I_{PP5R}, current changes by approximately 0%.
22. When 4X REF is enabled for I_{PP5R}, current changes by approximately 0%.
23. I_{PP0} test and limit is applicable for I_{DD0} and I_{DD1} conditions.
24. I_{PP3N} test and limit is applicable for all I_{DD2x}, I_{DD3x}, I_{DD4x} and I_{DD8} conditions; that is, testing I_{PP3N} should satisfy the I_{PP}s for the noted I_{DD} tests.
25. DDR4-1600 and DDR4-1866 use the same I_{DD} limits as DDR4-2133.
26. The I_{DD} values must be derated (increased) when operated between 85°C < T_C ≤ 95°C:
27. When T_C > 85°C: I_{DD0} and I_{DD1} must be derated by 10%; I_{DD2N}, I_{DD2NT}, I_{DD2P}, I_{DD2Q}, I_{DD3N} and I_{DD3P} must be derated by 15%; I_{DD4R}, I_{DD4W} and I_{DD7} must be derated by 4%; I_{DD5R} must be derated by 56%; I_{PP5R} must be derated by 81%; I_{PP0}, I_{PP3N} and I_{PP7} must be derated by 3%. These values are verified by design and characterization, and may not be subject to production test.
28. I_{PP6x} is applicable to I_{DD6N}, I_{DD6E}, I_{DD6R} and I_{DD6A} conditions.

Table 149: I_{DD} and I_{PP} Current Limits; Die Rev. E (-40° ≤ T_C ≤ 85°C)

Symbol	Width	DDR4-2133	DDR4-2400	DDR4-2666	DDR4-2933	DDR4-3200	Unit
I_{DD0}: One bank ACTIVATE-to-PRECHARGE current	x4	51	52	53	54	55	mA
	x8	56	57	58	59	60	mA
	x16	66	67	68	69	70	mA
I_{PP0}: One bank ACTIVATE-to-PRECHARGE I_{PP} current	x4, x8	3	3	3	3	3	mA
	x16	4	4	4	4	4	mA
I_{DD1}: One bank ACTIVATE-to-READ-to- PRECHARGE current	x4	62	63	64	65	66	mA
	x8	67	68	69	70	71	mA
	x16	80	81	82	83	84	mA
I_{DD2N}: Precharge standby current	ALL	41	42	43	44	45	mA
I_{DD2NT}: Precharge standby ODT current	x4, x8	47	48	49	50	51	mA
	x16	54	55	56	57	58	mA
I_{DD2P}: Precharge power-down current	ALL	38	38	38	38	38	mA
I_{DD2Q}: Precharge quiet standby current	ALL	42	42	42	42	42	mA
I_{DD3N}: Active standby current	x4	56	57	58	59	60	mA
	x8	57	58	59	60	61	mA
	x16	58	59	60	61	62	mA
I_{PP3N}: Active standby I_{PP} current	ALL	2	2	2	2	2	mA
I_{DD3P}: Active power-down current	x4	44	45	46	47	48	mA
	x8	46	47	48	49	50	mA
	x16	47	48	49	50	51	mA

Micron Technology, Inc. reserves the right to change products or specifications without notice.
© 2018 Micron Technology, Inc. All rights reserved.

Table 149: I_{DD} and I_{PP} Current Limits; Die Rev. E (-40° ≤ T_C ≤ 85°C)

Symbol	Width	DDR4-2133	DDR4-2400	DDR4-2666	DDR4-2933	DDR4-3200	Unit
I_{DD4R}: Burst read current	x4	101	106	112	119	127	mA
	x8	131	138	146	154	162	mA
	x16	231	243	263	282	299	mA
I_{DD4W}: Burst write current	x4	89	93	97	101	105	mA
	x8	107	112	117	123	128	mA
	x16	189	200	213	226	236	mA
I_{DD5R}: Distributed refresh current (1X REF)	ALL	68	68	68	68	68	mA
I_{PP5R}: Distributed refresh I_{PP} current (1X REF)	ALL	4	4	4	4	4	mA
I_{DD6N}: Self refresh current; -40–85°C [1]	ALL	53	53	53	53	53	mA
I_{DD6E}: Self refresh current; -40–95°C [2, 4]	ALL	113	113	113	113	113	mA
I_{DD6R}: Self refresh current; -40–45C [3, 4]	ALL	20	20	20	20	20	mA
I_{DD6A}: Auto self refresh current (25°C)[4]	ALL	11	11	11	11	11	mA
I_{DD6A}: Auto self refresh current (45°C)[4]	ALL	20	20	20	20	20	mA
I_{DD6A}: Auto self refresh current (75°C)[4]	ALL	51	51	51	51	51	mA
I_{DD6A}: Auto self refresh current (95°C)[4]	ALL	113	113	113	113	113	mA
I_{PP6x}: Auto self refresh I_{PP} current; -40–95°C[27]	ALL	6	6	6	6	6	mA
I_{DD7}: Bank interleave read current	x4	189	191	193	195	197	mA
	x8	177	179	181	183	185	mA
	x16	234	240	236	242	245	mA
I_{PP7}: Bank interleave read I_{PP} current	x4	9	9	9	9	9	mA
	x8	88		8	8	8	mA
	x16	99		9	9	9	mA
I_{DD8}: Maximum power-down current	ALL	36	36	36	36	36	mA

Notes: 1. Applicable for MR2 settings A7 = 0 and A6 = 0; manual mode with normal temperature range of operation (-40–85°C).
2. Applicable for MR2 settings A7 = 1 and A6 = 0; manual mode with extended temperature range of operation (-40–95°C).
3. Applicable for MR2 settings A7 = 0 and A6 = 1; manual mode with reduced temperature range of operation (-40–45°C).

Micron Technology, Inc. reserves the right to change products or specifications without notice.
© 2018 Micron Technology, Inc. All rights reserved.

4. I_{DD6R}, I_{DD6A}, and I_{DD6E} values are verified by design and characterization, and may not be subject to production test.
5. When additive latency is enabled for I_{DD0}, current changes by approximately +1%.
6. When additive latency is enabled for I_{DD1}, current changes by approximately +3%(x4/x8),+ 2%(x16).
7. When additive latency is enabled for I_{DD2N}, current changes by approximately +1%.
8. When DLL is disabled for I_{DD2N}, current changes by approximately -4%.
9. When CAL is enabled for I_{DD2N}, current changes by approximately -18%.
10. When gear-down is enabled for I_{DD2N}, current changes by approximately 0%.
11. When CA parity is enabled for I_{DD2N}, current changes by approximately +8%.
12. When additive latency is enabled for I_{DD3N}, current changes by approximately +1%.
13. When additive latency is enabled for I_{DD4R}, current changes by approximately +4%(x4/x8), +1%(x16).
14. When read DBI is enabled for I_{DD4R}, current changes by approximately -9%.
15. When additive latency is enabled for I_{DD4W}, current changes by approximately +5%(x4/x8), +2%(x16).
16. When write DBI is enabled for I_{DD4W}, current changes by approximately +1%.
17. When write CRC is enabled for I_{DD4W}, current changes by approximately -5%(x4/x8), -8%(x16).
18. When CA parity is enabled for I_{DD4W}, current changes by approximately +13%(x4/x8), +6%(x16).
19. When 2X REF is enabled for I_{DD5R}, current changes by approximately 0%.
20. When 4X REF is enabled for I_{DD5R}, current changes by approximately 0%.
21. When 2X REF is enabled for I_{PP5R}, current changes by approximately 0%.
22. When 4X REF is enabled for I_{PP5R}, current changes by approximately 0%.
23. I_{PP0} test and limit is applicable for I_{DD0} and I_{DD1} conditions.
24. I_{PP3N} test and limit is applicable for all I_{DD2x}, I_{DD3x}, I_{DD4x} and I_{DD8} conditions; that is, testing I_{PP3N} should satisfy the I_{PP}s for the noted I_{DD} tests.
25. DDR4-1600 and DDR4-1866 use the same I_{DD} limits as DDR4-2133.
26. The I_{DD} values must be derated (increased) when operated between 85°C < T_C ≤ 95°C: I_{DD0} and I_{DD1}must be derated by 10%; I_{DD2N}, I_{DD2NT}, I_{DD2Q}, and I_{DD3N} must be derated by 18%; I_{DD2P} and I_{DD3P} must be derated by 23%; I_{DD4R} and I_{DD4W} must be derated by 6%; I_{DD5R} must be derated by 58%; I_{DD7}, I_{PP7} and I_{PP0} must be derated by 3%; I_{DD8} must be derated by 28%; I_{PP5R} must be derated by 97%
27. I_{PP6x} is applicable to I_{DD6N}, I_{DD6E}, I_{DD6R} and I_{DD6A} conditions.

Table 150: I_{DD} and I_{PP} Current Limits; Die Rev. F (-40° ≤ T_C ≤ 85°C)

Symbol	Width	DDR4-2133	DDR4-2400	DDR4-2666	DDR4-2933	DDR4-3200	Unit
I_{DD0}: One bank ACTIVATE-to-PRECHARGE current	x4	51	52	53	54	55	mA
	x8	56	57	58	59	60	mA
	x16	66	67	68	69	70	mA
I_{PP0}: One bank ACTIVATE-to-PRECHARGE I_{PP} current	x4, x8	3	3	3	3	3	mA
	x16	4	4	4	4	4	mA
I_{DD1}: One bank ACTIVATE-to-READ-to- PRECHARGE current	x4	62	63	64	65	66	mA
	x8	67	68	69	70	71	mA
	x16	80	81	82	83	84	mA
I_{DD2N}: Precharge standby current	ALL	41	42	43	44	45	mA
I_{DD2NT}: Precharge standby ODT current	x4, x8	47	48	49	50	51	mA
	x16	54	55	56	57	58	mA
I_{DD2P}: Precharge power-down current	ALL	38	38	38	38	38	mA

Micron Technology, Inc. reserves the right to change products or specifications without notice.
© 2018 Micron Technology, Inc. All rights reserved.

Table 150: I_{DD} and I_{PP} Current Limits; Die Rev. F (-40° ≤ T_C ≤ 85°C)

Symbol	Width	DDR4-2133	DDR4-2400	DDR4-2666	DDR4-2933	DDR4-3200	Unit
I_{DD2Q}: Precharge quiet standby current	ALL	42	42	42	42	42	mA
I_{DD3N}: Active standby current	x4	56	57	58	59	60	mA
	x8	57	58	59	60	61	mA
	x16	58	59	60	61	62	mA
I_{PP3N}: Active standby I_{PP} current	ALL	2	2	2	2	2	mA
I_{DD3P}: Active power-down current	x4	44	45	46	47	48	mA
	x8	46	47	48	49	50	mA
	x16	47	48	49	50	51	mA
I_{DD4R}: Burst read current	x4	101	106	112	119	127	mA
	x8	109	117	125	132	140	mA
	x16	141	154	167	180	193	mA
I_{DD4W}: Burst write current	x4	80	84	88	92	96	mA
	x8	92	97	102	107	112	mA
	x16	101	111	121	131	141	mA
I_{DD5R}: Distributed refresh current (1X REF)	ALL	68	68	68	68	68	mA
I_{PP5R}: Distributed refresh I_{PP} current (1X REF)	ALL	4	4	4	4	4	mA
I_{DD6N}: Self refresh current; -40–85°C [1]	ALL	53	53	53	53	53	mA
I_{DD6E}: Self refresh current; -40–95°C [2, 4]	ALL	90	90	90	90	90	mA
I_{DD6R}: Self refresh current; -40–45C [3, 4]	ALL	20	20	20	20	20	mA
I_{DD6A}: Auto self refresh current (25°C)[4]	ALL	11	11	11	11	11	mA
I_{DD6A}: Auto self refresh current (45°C)[4]	ALL	20	20	20	20	20	mA
I_{DD6A}: Auto self refresh current (75°C)[4]	ALL	51	51	51	51	51	mA
I_{DD6A}: Auto self refresh current (95°C)[4]	ALL	90	90	90	90	90	mA
I_{PP6X}: Auto self refresh I_{PP} current; -40–95°C[27]	ALL	6	6	6	6	6	mA
I_{DD7}: Bank interleave read current	x4	210	225	240	255	270	mA
	x8	159	161	163	165	167	mA
	x16	180	185	190	195	200	mA

Micron Technology, Inc. reserves the right to change products or specifications without notice.
© 2018 Micron Technology, Inc. All rights reserved.

Table 150: I_{DD} and I_{PP} Current Limits; Die Rev. F (-40° ≤ T_C ≤ 85°C)

Symbol	Width	DDR4-2133	DDR4-2400	DDR4-2666	DDR4-2933	DDR4-3200	Unit
I_{PP7}: Bank interleave read I_{PP} current	x4	11	11	11	11	11	mA
	x8	8	8	8	8	8	mA
	x16	13	13	13	13	13	mA
I_{DD8}: Maximum power-down current	ALL	36	36	36	36	36	mA

Notes:
1. Applicable for MR2 settings A7 = 0 and A6 = 0; manual mode with normal temperature range of operation (-40–85°C).
2. Applicable for MR2 settings A7 = 1 and A6 = 0; manual mode with extended temperature range of operation (-40–95°C).
3. Applicable for MR2 settings A7 = 0 and A6 = 1; manual mode with reduced temperature range of operation (-40–45°C).
4. I_{DD6R}, I_{DD6A}, and I_{DD6E} values are verified by design and characterization, and may not be subject to production test.
5. When additive latency is enabled for I_{DD0}, current changes by approximately +1%.
6. When additive latency is enabled for I_{DD1}, current changes by approximately +5%.
7. When additive latency is enabled for I_{DD2N}, current changes by approximately +2%.
8. When DLL is disabled for I_{DD2N}, current changes by approximately +16%.
9. When CAL is enabled for I_{DD2N}, current changes by approximately -12%.
10. When gear-down is enabled for I_{DD2N}, current changes by approximately +2%.
11. When CA parity is enabled for I_{DD2N}, current changes by approximately +9%.
12. When additive latency is enabled for I_{DD3N}, current changes by approximately -2%.
13. When additive latency is enabled for I_{DD4R}, current changes by approximately +4%.
14. When read DBI is enabled for I_{DD4R}, current changes by approximately +4%.
15. When additive latency is enabled for I_{DD4W}, current changes by approximately -2%.
16. When write DBI is enabled for I_{DD4W}, current changes by approximately +1%.
17. When write CRC is enabled for I_{DD4W}, current changes by approximately -4%.
18. When CA parity is enabled for I_{DD4W}, current changes by approximately +15%.
19. When 2X REF is enabled for I_{DD5R}, current changes by approximately +0%.
20. When 4X REF is enabled for I_{DD5R}, current changes by approximately +0%.
21. When 2X REF is enabled for I_{PP5R}, current changes by approximately +0%.
22. When 4X REF is enabled for I_{PP5R}, current changes by approximately +0%.
23. I_{PP0} test and limit is applicable for I_{DD0} and I_{DD1} conditions.
24. I_{PP3N} test and limit is applicable for all I_{DD2x}, I_{DD3x}, I_{DD4x} and I_{DD8} conditions; that is, testing I_{PP3N} should satisfy the I_{PP}s for the noted I_{DD} tests.
25. DDR4-1600 and DDR4-1866 use the same I_{DD} limits as DDR4-2133.
26. The I_{DD} values must be derated (increased) when operated between 85°C < T_C ≤ 95°C: I_{pp0}, $I_{DD7,\ and\ IPP7}$must be derated by +3%; I_{DD0}, I_{DD1}, I_{PP3N}, $I_{DD4R\ and\ IDD4W}$ must be derated by +13%; I_{DD2N}, $I_{DD2NT,\ IDD2Q,\ and\ IDD3N}$ must be derated by 21%; I_{DD2P} and I_{DD3P} must be derated by +27%; I_{DD8} must be derated by +37%; I_{DD5R} and I_{PP5R} must be derated by +57%.
27. I_{PP6x} is applicable to I_{DD6N}, I_{DD6E}, I_{DD6R} and I_{DD6A} conditions.

Micron Technology, Inc. reserves the right to change products or specifications without notice.
© 2018 Micron Technology, Inc. All rights reserved.

Speed Bin Tables

DDR4 DRAM timing is primarily covered by two types of tables: the Speed Bin tables in this section and the tables found in the Electrical Characteristics and AC Timing Parameters section. The timing parameter tables define the applicable timing specifications based on the speed rating. The Speed Bin tables on the following pages list the ^{t}AA, ^{t}RCD, ^{t}RP, ^{t}RAS, and ^{t}RC limits of a given speed mark and are applicable to the CL settings in the lower half of the table provided they are applied in the correct clock range, which is noted.

Backward Compatibility

Although the speed bin tables list the slower data rates, ^{t}AA, CL, and CWL, it is difficult to determine whether a faster speed bin supports all of the ^{t}AA, CL, and CWL combinations across all the data rates of a slower speed bin. To assist in this process, please refer to the Backward Compatibility table.

Micron Technology, Inc. reserves the right to change products or specifications without notice.
© 2018 Micron Technology, Inc. All rights reserved.

Table 151: Backward Compatibility

Note 1 applies to the entire table.

Component Speed Bin	Speed Bin Supported																	
	-125	-125E	-107	-107E	-093	-093E	-083D	-083	-083E	-075D	-075	-075E	-068D	-068	-068E	-062	-062E	-062Y
-125	yes																	
-125E	yes[2]	yes																
-107	yes		yes															
-107E	yes[2]	yes	yes[2]	yes														
-093	yes		yes		yes													
-093E	yes[2]	yes	yes[2]	yes	yes[2]	yes												
-083D	yes		yes		yes		yes											
-083	yes		yes		yes		yes	yes										
-083E	yes[2]	yes	yes[2]	yes	yes[2]	yes	yes[2]	yes[2]	yes									
-075D	yes		yes		yes		yes			yes								
-075	yes		yes		yes		yes	yes		yes	yes							
-075E	yes	yes	yes	yes	yes	yes	yes	yes		yes	yes	yes						
-068D	yes		yes		yes		yes			yes			yes					
-068	yes		yes		yes		yes	yes		yes	yes		yes	yes				
-068E	yes		yes		yes		yes	yes		yes	yes		yes	yes	yes			
-062	yes		yes		yes		yes			yes			yes			yes		
-062E	yes		yes		yes		yes	yes		yes	yes		yes	yes		yes	yes	
-062Y	yes	yes	yes	yes	yes	yes	yes	yes	yes	yes	yes	yes	yes	yes		yes	yes	yes

Notes: 1. The backward compatibility table is not meant to guarantee that any new device will be a drop in replacement for an existing part number. Customers should review the operating conditions for any device to determine its suitability for use in their design.
2. This condition exceeds the JEDEC requirement in order to allow additional flexibility for components. However, JEDEC SPD compliance may force modules to only support the JEDEC-defined value. Refer to the SPD documentation for further clarification.

Micron Technology, Inc. reserves the right to change products or specifications without notice.
© 2018 Micron Technology, Inc. All rights reserved.

CCM005-1406124318-10453
16gb_ddr4_dram.pdf - Rev. H 8/2021 EN

Table 152: DDR4-1600 Speed Bins and Operating Conditions

Notes 1–3 apply to the entire table

DDR4-1600 Speed Bin							-125E		-125		
CL-*n*RCD-*n*RP							11-11-11		12-12-12		
Parameter						Symbol	Min	Max	Min	Max	Unit
Internal READ command to first data						^{t}AA	13.75 (13.50)[4]	19.00[6]	15.00	19.00[6]	ns
Internal READ command to first data with read DBI enabled						$^{t}AA_DBI$	^{t}AA (MIN) + 2*n*CK	^{t}AA (MAX) + 2*n*CK	^{t}AA (MIN) + 2*n*CK	^{t}AA (MAX) + 2*n*CK	ns
ACTIVATE-to-internal READ or WRITE delay time						^{t}RCD	13.75 (13.50)[4]	–	15.00	–	ns
PRECHARGE command period						^{t}RP	13.75 (13.50)[4]	–	15.00	–	ns
ACTIVATE-to-PRECHARGE command period						^{t}RAS	35	9 × $^{t}REFI$	35	9 × $^{t}REFI$	ns
ACTIVATE-to-ACTIVATE or REFRESH command period						^{t}RC[5]	^{t}RAS + ^{t}RP	–	^{t}RAS + ^{t}RP	–	ns
Data Rate Max (MT/s)	**Equivalent Speed Bin**	**^{t}AAmin(ns): non-DB**	**READ CL: nonDBI**	**READ CL: DBI**	**WRITE CWL**	**Symbol**	**Min**	**Max**	**Min**	**Max**	**Unit**
1333	-	13.50	9	11	9	^{t}CK (AVG)	1.500	1.900[6]	Reserved		ns
	-	15.00	10	12		^{t}CK (AVG)	1.500[6]	1.900[6]	1.500	1.900[6]	ns
1600	-125E	13.75	11	13	9, 11	^{t}CK (AVG)	1.250	<1.500	Reserved		ns
	-125	15.00	12	14		^{t}CK (AVG)			1.250	<1.500	ns
Supported CL settings							9, 10[6], 11-12		10, 12		*n*CK
Supported CL settings with read DBI							11, 12[6], 13-14		12, 14		*n*CK
Supported CWL settings							9, 11		9, 11		*n*CK

Notes: 1. Speed Bin table is only valid with DLL enabled.
2. When operating in 2^{t}CK WRITE preamble mode, CWL must be programmed to a value at least 1 clock greater than the lowest CWL setting supported in the applicable ^{t}CK range.

CCM005-1406124318-10453
16gb_ddr4_dram.pdf - Rev. H 8/2021 EN
Micron Technology, Inc. reserves the right to change products or specifications without notice.
© 2018 Micron Technology, Inc. All rights reserved.

3. The programmed value of CWL must be less than or equal to the programmed value of CL.
4. This value applies to non-native ^{t}CK-CL-*n*RCD-*n*RP combinations.
5. When calculating ^{t}RC in clocks, values may not be used in a combination that violate ^{t}RAS or ^{t}RP.
6. This value exceeds the JEDEC requirement in order to allow additional flexibility, especially for components. However, JEDEC SPD compliance may force modules to only support the JEDEC defined value, please refer to the SPD documentation.

Micron Technology, Inc. reserves the right to change products or specifications without notice.
© 2018 Micron Technology, Inc. All rights reserved.

Table 153: DDR4-1866 Speed Bins and Operating Conditions

Notes 1–3 apply to the entire table

DDR4-1866 Speed Bin							-107E		-107		
CL-*n*RCD-*n*RP							13-13-13		14-14-14		
Parameter						Symbol	Min	Max	Min	Max	Unit
Internal READ command to first data						^{t}AA	13.92 (13.50)[4]	19.00[6]	15.00	19.00[6]	ns
Internal READ command to first data with read DBI enabled						^{t}AA_DBI	^{t}AA (MIN) + 2*n*CK	^{t}AA (MAX) + 2*n*CK	^{t}AA (MIN) + 2*n*CK	^{t}AA (MAX) + 2*n*CK	ns
ACTIVATE to internal READ or WRITE delay time						^{t}RCD	13.92 (13.50)[4]	–	15.00	–	ns
PRECHARGE command period						^{t}RP	13.92 (13.50)[4]	–	15.00	–	ns
ACTIVATE-to-PRECHARGE command period						^{t}RAS	34	9 × ^{t}REFI	34	9 × ^{t}REFI	ns
ACTIVATE-to-ACTIVATE or REFRESH command period						^{t}RC[5]	^{t}RAS + ^{t}RP	–	^{t}RAS + ^{t}RP	–	ns
Data Rate Max (MT/s)	**Equivalent Speed Bin**	**^{t}AAmin: nonDBI**	**READ CL: nonDBI**	**READ CL: DBI**	**WRITE CWL**	**Symbol**	**Min**	**Max**	**Min**	**Max**	**Unit**
1333	–	13.50	9	11	9	^{t}CK (AVG)	1.500	1.900[6]	Reserved		ns
	–	15.00	10	12		^{t}CK (AVG)	1.500[6]	1.900[6]	1.500	1.900[6]	ns
1600	-125E	13.75	11	13	9, 11	^{t}CK (AVG)	1.250	<1.500	Reserved		ns
	-125	15.00	12	14		^{t}CK (AVG)			1.250	<1.500	ns
1866	-107E	13.92	13	15	10, 12	^{t}CK (AVG)	1.071	<1.250	Reserved		ns
	-107	15.00	14	16		^{t}CK (AVG)			1.071	<1.250	ns
Supported CL settings							9, 10[6], 11–14		10, 12, 14		*n*CK
Supported CL settings with read DBI							11, 12[6], 13–16		12, 14, 16		*n*CK
Supported CWL settings							9–12		9–12		*n*CK

Notes: 1. Speed Bin table is only valid with DLL enabled.
2. When operating in 2^{t}CK WRITE preamble mode, CWL must be programmed to a value at least 1 clock greater than the lowest CWL setting supported in the applicable ^{t}CK range.

Micron Technology, Inc. reserves the right to change products or specifications without notice.
© 2018 Micron Technology, Inc. All rights reserved.

CCM005-1406124318-10453
16gb_ddr4_dram.pdf - Rev. H 8/2021 EN

3. The programmed value of CWL must be less than or equal to the programmed value of CL.
4. This value applies to non-native ^{t}CK-CL-*n*RCD-*n*RP combinations.
5. When calculating ^{t}RC in clocks, values may not be used in a combination that violate ^{t}RAS or ^{t}RP.
6. This value exceeds the JEDEC requirement in order to allow additional flexibility, especially for components. However, JEDEC SPD compliance may force modules to only support the JEDEC defined value, please refer to the SPD documentation.

Micron Technology, Inc. reserves the right to change products or specifications without notice.
© 2018 Micron Technology, Inc. All rights reserved.

Table 154: DDR4-2133 Speed Bins and Operating Conditions

Notes 1–3 apply to the entire table

DDR4-2133 Speed Bin							-093E		-093		
CL-*n*RCD-*n*RP							15-15-15		16-16-16		
Parameter						Symbol	Min	Max	Min	Max	Unit
Internal READ command to first data						^{t}AA	14.06 (13.50)[4]	19.00[6]	15.00	19.00[6]	ns
Internal READ command to first data with read DBI enabled						^{t}AA_DBI	^{t}AA (MIN) + 3*n*CK	^{t}AA (MAX) + 3*n*CK	^{t}AA (MIN) + 3*n*CK	^{t}AA (MAX) + 3*n*CK	ns
ACTIVATE to internal READ or WRITE delay time						^{t}RCD	14.06 (13.50)[4]	–	15.00	–	ns
PRECHARGE command period						^{t}RP	14.06 (13.50)[4]	–	15.00	–	ns
ACTIVATE-to-PRECHARGE command period						^{t}RAS	33	9 × ^{t}REFI	33	9 × ^{t}REFI	ns
ACTIVATE-to-ACTIVATE or REFRESH command period						^{t}RC[5]	^{t}RAS + ^{t}RP	–	^{t}RAS + ^{t}RP	–	ns
Data Rate Max (MT/s)	**Equivalent Speed Bin**	**^{t}AAmin (ns): non-DBI**	**READ CL: non-DBI**	**READ CL: DBI**	**WRITE CWL**	**Symbol**	**Min**	**Max**	**Min**	**Max**	**Unit**
1333	–	13.50	9	11	9	^{t}CK (AVG)	1.500	1.900[6]	Reserved		ns
	–	15.00	10	12		^{t}CK (AVG)	1.500[6]	1.900[6]	1.500	1.900[6]	ns
1600	-125E	13.75	11	13	9, 11	^{t}CK (AVG)	1.250	<1.500	Reserved		ns
	-125	15.00	12	14		^{t}CK (AVG)			1.250	<1.500	ns
1866	-107E	13.92	13	15	10, 12	^{t}CK (AVG)	1.071	<1.250	Reserved		ns
	-107	15.00	14	16		^{t}CK (AVG)			1.071	<1.250	ns
2133	-093E	14.06	15	18	11, 14	^{t}CK (AVG)	0.937	<1.071	Reserved		ns
	-093	15.00	16	19		^{t}CK (AVG)			0.937	<1.071	ns
Supported CL settings							9, 10[6], 11–16		10, 12, 14, 16		*n*CK
Supported CL settings with read DBI							11, 12[6], 13–16, 18-19		12, 14, 16, 19		*n*CK
Supported CWL settings							9, 10, 11, 12, 14		9, 10, 11, 12, 14		*n*CK

Notes: 1. Speed Bin table is only valid with DLL enabled.

Micron Technology, Inc. reserves the right to change products or specifications without notice.
© 2018 Micron Technology, Inc. All rights reserved.

CCM005-1406124318-10453
16gb_ddr4_dram.pdf - Rev. H 8/2021 EN

2. When operating in 2^{t}CK WRITE preamble mode, CWL must be programmed to a value at least 1 clock greater than the lowest CWL setting supported in the applicable ^{t}CK range.
3. The programmed value of CWL must be less than or equal to the programmed value of CL.
4. This value applies to non-native ^{t}CK-CL-*n*RCD-*n*RP combinations.
5. When calculating ^{t}RC in clocks, values may not be used in a combination that violate ^{t}RAS or ^{t}RP.
6. This value exceeds the JEDEC requirement in order to allow additional flexibility, especially for components. However, JEDEC SPD compliance may force modules to only support the JEDEC defined value, please refer to the SPD documentation.

Micron Technology, Inc. reserves the right to change products or specifications without notice.
© 2018 Micron Technology, Inc. All rights reserved.

Table 155: DDR4-2400 Speed Bins and Operating Conditions

Notes 1–3 apply to the entire table

DDR4-2400 Speed Bin							-083E		-083		-083D		Unit
CL-*n*RCD-*n*RP							16-16-16		17-17-17		18-18-18		
Parameter						Symbol	Min	Max	Min	Max	Min	Max	
Internal READ command to first data						^{t}AA	13.32	19.00[6]	14.16 (13.75)[4]	19.00[6]	15.00	19.00[6]	ns
Internal READ command to first data with read DBI enabled						$^{t}AA_DBI$	^{t}AA (MIN) + 3*n*CK	^{t}AA (MAX) + 3*n*CK	^{t}AA (MIN) + 3*n*CK	^{t}AA (MAX) + 3*n*CK	^{t}AA (MIN) + 3*n*CK	^{t}AA (MAX) + 3*n*CK	ns
ACTIVATE to internal READ or WRITE delay time						^{t}RCD	13.32	–	14.16 (13.75)[4]	–	15.00	19.00	ns
PRECHARGE command period						^{t}RP	13.32	–	14.16 (13.75)[4]	–	15.00	19.00	ns
ACTIVATE-to-PRECHARGE command period						^{t}RAS	32	9 × $^{t}REFI$	32	9 × $^{t}REFI$	32	9 × $^{t}REFI$	ns
ACTIVATE-to-ACTIVATE or REFRESH command period						^{t}RC[5]	^{t}RAS + ^{t}RP	–	^{t}RAS + ^{t}RP	–	^{t}RAS + ^{t}RP	–	ns
Data Rate Max (MT/s)	**Equivalent Speed Bin**	**$^{t}AAmin$ (ns): non-DBI**	**READ CL: non-DBI**	**READ CL: DBI**	**WRITE CWL**	**Symbol**	**Min**	**Max**	**Min**	**Max**	**Min**	**Max**	**Unit**
1333	–	13.50	9	11	9	^{t}CK (AVG)	1.500	1.900[6]	Reserved		Reserved		ns
	–	15.00	10	12		^{t}CK (AVG)	1.500[6]	1.900[6]	1.500	1.900[6]	1.500	1.900[6]	ns
1600	-125E	13.75	11	13	9, 11	^{t}CK (AVG)	1.250	<1.500	1.250	<1.500	Reserved		ns
	-125	15.00	12	14		^{t}CK (AVG)					1.250	<1.500	ns
1866	-107E	13.92	13	15	10, 12	^{t}CK (AVG)	1.071	<1.250	1.071	<1.250	Reserved		ns
	-107	15.00	14	16		^{t}CK (AVG)					1.071	<1.250	ns
2133	-093E	14.06	15	18	11, 14	^{t}CK (AVG)	0.937	<1.071	0.937	<1.071	Reserved		ns
	-093	15.00	16	19		^{t}CK (AVG)					0.937	<1.071	ns
2400	-083E	13.32	16	19	12, 16	^{t}CK (AVG)	0.833	<0.937	Reserved		Reserved		ns
	-083	14.16	17	20		^{t}CK (AVG)			0.833	<0.937			ns
	-083D	15.00	18	21		^{t}CK (AVG)					0.833	<0.937	ns

Micron Technology, Inc. reserves the right to change products or specifications without notice.
© 2018 Micron Technology, Inc. All rights reserved.

CCM005-1406124318-10453
16gb_ddr4_dram.pdf - Rev. H 8/2021 EN

DDR4-2400 Speed Bin		-083E		-083		-083D		
CL-*n*RCD-*n*RP		16-16-16		17-17-17		18-18-18		
Parameter	**Symbol**	**Min**	**Max**	**Min**	**Max**	**Min**	**Max**	**Unit**
Supported CL settings		9, 10[6], 11–18		10–18		10, 12, 14, 16, 18		*n*CK
Supported CL settings with read DBI		11, 12[6], 13–16, 18–21		12–16, 18–21		12, 14, 16, 19, 21		*n*CK
Supported CWL settings		9–12, 14, 16		9-12, 14, 16		9–12, 14, 16		*n*CK

Notes: 1. Speed Bin table is only valid with DLL enabled.
2. When operating in 2[t]CK WRITE preamble mode, CWL must be programmed to a value at least 1 clock greater than the lowest CWL setting supported in the applicable [t]CK range.
3. The programmed value of CWL must be less than or equal to the programmed value of CL.
4. This value applies to non-native [t]CK-CL-*n*RCD-*n*RP combinations.
5. When calculating [t]RC in clocks, values may not be used in a combination that violate [t]RAS or [t]RP.
6. This value exceeds the JEDEC requirement in order to allow additional flexibility, especially for components. However, JEDEC SPD compliance may force modules to only support the JEDEC defined value, please refer to the SPD documentation.

Micron Technology, Inc. reserves the right to change products or specifications without notice.
© 2018 Micron Technology, Inc. All rights reserved.

Table 156: DDR4-2666 Speed Bins and Operating Conditions

Notes 1–3 apply to the entire table

DDR4-2666 Speed Bin							-075E		-075		-075D		Unit
CL-*n*RCD-*n*RP							18-18-18		19-19-19		20-20-20		
Parameter						Symbol	Min	Max	Min	Max	Min	Max	
Internal READ command to first data						^{t}AA	13.50	19.00[6]	14.25 (13.75)[4]	19.00[6]	15.00	19.00[6]	ns
Internal READ command to first data with read DBI enabled						$^{t}AA_DBI$	^{t}AA (MIN) + 3*n*CK	^{t}AA (MAX) + 3*n*CK	^{t}AA (MIN) + 3*n*CK	^{t}AA (MAX) + 3*n*CK	^{t}AA (MIN) + 3*n*CK	^{t}AA (MAX) + 3*n*CK	ns
ACTIVATE to internal READ or WRITE delay time						^{t}RCD	13.50	–	14.25 (13.75)[4]	–	15.00	–	ns
PRECHARGE command period						^{t}RP	13.50	–	14.25 (13.75)[4]	–	15.00	–	ns
ACTIVATE-to-PRECHARGE command period						^{t}RAS	32	9 × $^{t}REFI$	32	9 × $^{t}REFI$	32	9 × $^{t}REFI$	ns
ACTIVATE-to-ACTIVATE or REFRESH command period						^{t}RC[5]	^{t}RAS + ^{t}RP	–	^{t}RAS + ^{t}RP	–	^{t}RAS + ^{t}RP	–	ns
Data Rate Max (MT/s)	**Equivalent Speed Bin**	**$^{t}AAmin$ (ns): non-DBI**	**READ CL: non-DBI**	**READ CL: DBI**	**WRITE CWL**	**Symbol**	**Min**	**Max**	**Min**	**Max**	**Min**	**Max**	**Unit**
1333	-	13.50	9	11	9	^{t}CK (AVG)	1.500	1.900[6]	Reserved		Reserved		ns
	-	15.00	10	12		^{t}CK (AVG)			1.500	1.900[6]	1.500	1.900[6]	ns
1600	-125E	13.75	11	13	9, 11	^{t}CK (AVG)	1.250	<1.500	1.250	<1.500	Reserved		ns
	-125	15.00	12	14		^{t}CK (AVG)					1.250	<1.500	ns
1866	-107E	13.92	13	15	10, 12	^{t}CK (AVG)	1.071	<1.250	1.071	<1.250	Reserved		ns
	-107	15.00	14	16		^{t}CK (AVG)					1.071	<1.250	ns
2133	-093E	14.06	15	18	11, 14	^{t}CK (AVG)	0.937	<1.071	0.937	<1.071	Reserved		ns
	-093	15.00	16	19		^{t}CK (AVG)					0.937	<1.071	ns
2400	-083E	13.32	16	19	12, 16	^{t}CK (AVG)	Reserved		Reserved		Reserved		ns
	-083	14.16	17	20		^{t}CK (AVG)	0.833	<0.937	0.833	<0.937			ns
	-083D	15.00	18	21		^{t}CK (AVG)					0.833	<0.937	ns

Micron Technology, Inc. reserves the right to change products or specifications without notice.
© 2018 Micron Technology, Inc. All rights reserved.

CCM005-1406124318-10453
16gb_ddr4_dram.pdf - Rev. H 8/2021 EN

DDR4-2666 Speed Bin							-075E		-075		-075D		
CL-*n*RCD-*n*RP							18-18-18		19-19-19		20-20-20		
Parameter						Symbol	Min	Max	Min	Max	Min	Max	Unit
2666	-075E	13.50	18	21	14, 18	^{t}CK (AVG)	0.750	<0.833	Reserved		Reserved		ns
	-075	14.25	19	22		^{t}CK (AVG)			0.750	<0.833			ns
	-075D	15.00	20	23		^{t}CK (AVG)					0.750	<0.833	ns
Supported CL settings							9–20		10-20		10, 12, 14, 16, 18, 20		*n*CK
Supported CL settings with read DBI							11–16, 18–23		12–16, 18–23		12, 14, 16, 19, 21, 23		*n*CK
Supported CWL settings							9–12, 14, 16, 18		9–12, 14, 16, 18		9–12, 14, 16, 18		*n*CK

Notes: 1. Speed Bin table is only valid with DLL enabled.
2. When operating in 2^{t}CK WRITE preamble mode, CWL must be programmed to a value at least 1 clock greater than the lowest CWL setting supported in the applicable ^{t}CK range.
3. The programmed value of CWL must be less than or equal to the programmed value of CL.
4. This value applies to non-native ^{t}CK-CL-*n*RCD-*n*RP combinations.
5. When calculating ^{t}RC in clocks, values may not be used in a combination that violate ^{t}RAS or ^{t}RP.
6. This value exceeds the JEDEC requirement in order to allow additional flexibility, especially for components. However, JEDEC SPD compliance may force modules to only support the JEDEC defined value, please refer to the SPD documentation.

Micron Technology, Inc. reserves the right to change products or specifications without notice.
© 2018 Micron Technology, Inc. All rights reserved.

Table 157: DDR4-2933 Speed Bins and Operating Conditions

Notes 1–3 apply to the entire table

DDR4-2933 Speed Bin							-068E		-068		-068D		Unit
CL-*n*RCD-*n*RP							20-20-20		21-21-21		22-22-22		
Parameter						Symbol	Min	Max	Min	Max	Min	Max	
Internal READ command to first data						^{t}AA	13.64	19.00[6]	14.32 (13.75)[4]	19.00[6]	15.00	19.00[6]	ns
Internal READ command to first data with read DBI enabled						$^{t}AA_DBI$	^{t}AA (MIN) + 4*n*CK	^{t}AA (MAX) + 4*n*CK	^{t}AA (MIN) + 4*n*CK	^{t}AA (MAX) + 4*n*CK	^{t}AA (MIN) + 4*n*CK	^{t}AA (MAX) + 4*n*CK	ns
ACTIVATE-to-internal READ or WRITE delay time						^{t}RCD	13.64	–	14.32 (13.75)[4]	–	15.00	–	ns
PRECHARGE command period						^{t}RP	13.64	–	14.32 (13.75)[4]	–	15.00	–	ns
ACTIVATE-to-PRECHARGE command period						^{t}RAS	32	9 × $^{t}REFI$	32	9 × $^{t}REFI$	32	9 × $^{t}REFI$	ns
ACTIVATE-to-ACTIVATE or REFRESH command period						^{t}RC[5]	^{t}RAS + ^{t}RP	–	^{t}RAS + ^{t}RP	–	^{t}RAS + ^{t}RP	–	ns
Data Rate Max (MT/s)	**Equivalent Speed Bin**	**$^{t}AAmin$(ns): non-DBI**	**READ CL: non-DBI**	**READ CL: DBI**	**WRITE CWL**	**Symbol**	**Min**	**Max**	**Min**	**Max**	**Min**	**Max**	**Unit**
1333	–	13.50	9	11	9	^{t}CK (AVG)	Reserved		Reserved		Reserved		ns
	–	15.00	10	12		^{t}CK (AVG)	1.500	1.900[6]	1.500	1.900[6]	1.500	1.900[6]	ns
1600	-125E	13.75	11	13	9, 11	^{t}CK (AVG)	1.250	<1.500	1.250	<1.500	Reserved		ns
	-125	15.00	12	14		^{t}CK (AVG)					1.250	<1.500	ns
1866	-107E	13.92	13	15	10, 12	^{t}CK (AVG)	1.071	<1.250	1.071	<1.250	Reserved		ns
	-107	15.00	14	16		^{t}CK (AVG)					1.071	<1.250	ns
2133	-093E	14.06	15	18	11, 14	^{t}CK (AVG)	0.937	<1.071	0.937	<1.071	Reserved		ns
	-093	15.00	16	19		^{t}CK (AVG)					0.937	<1.071	ns
2400	-083E	13.32	16	19	12, 16	^{t}CK (AVG)	Reserved		Reserved		Reserved		ns
	-083	14.16	17	20		^{t}CK (AVG)	0.833	<0.937	0.833	<0.937			ns
	083D	15.00	18	21		^{t}CK (AVG)					0.833	<0.937	ns

Micron Technology, Inc. reserves the right to change products or specifications without notice.
© 2018 Micron Technology, Inc. All rights reserved.

CCM005-1406124318-10453
16gb_ddr4_dram.pdf - Rev. H 8/2021 EN

DDR4-2933 Speed Bin							-068E		-068		-068D		
CL-*n*RCD-*n*RP							20-20-20		21-21-21		22-22-22		
Parameter						Symbol	Min	Max	Min	Max	Min	Max	Unit
2666	-075E	13.50	18	21	14, 18	^{t}CK (AVG)	Reserved		Reserved		Reserved		ns
	-075	14.25	19	22		^{t}CK (AVG)	0.750	<0.833	0.750	<0.833			ns
	-075D	15.00	20	23		^{t}CK (AVG)					0.750	<0.833	ns
2933	-068E	13.64	20	24	16, 20	^{t}CK (AVG)	0.682	<0.750	Reserved		Reserved		ns
	-068	14.32	21	25		^{t}CK (AVG)			0.682	<0.750			ns
	-068D	15.00	22	26		^{t}CK (AVG)					0.682	<0.750	ns
	–	16.37	24	28		^{t}CK (AVG)	Reserved		Reserved		Reserved		ns
Supported CL settings							10–22		10–22		10, 12, 14, 16, 18, 20, 22		*n*CK
Supported CL settings with read DBI							12–16, 18–26		12–16,18–23, 25-26		12, 14, 16, 19, 21, 23, 26		*n*CK
Supported CWL settings							9–12, 14, 16, 18, 20		9–12, 14, 16, 18, 20		9–12, 14, 16, 18, 20		*n*CK

Notes: 1. Speed Bin table is only valid with DLL enabled.
2. When operating in 2^{t}CK WRITE preamble mode, CWL must be programmed to a value at least 1 clock greater than the lowest CWL setting supported in the applicable ^{t}CK range.
3. The programmed value of CWL must be less than or equal to the programmed value of CL.
4. This value applies to non-native ^{t}CK-CL-*n*RCD-*n*RP combinations.
5. When calculating ^{t}RC in clocks, values may not be used in a combination that violate ^{t}RAS or ^{t}RP.
6. This value exceeds the JEDEC requirement in order to allow additional flexibility, especially for components. However, JEDEC SPD compliance may force modules to only support the JEDEC defined value, please refer to the SPD documentation.

Micron Technology, Inc. reserves the right to change products or specifications without notice.
© 2018 Micron Technology, Inc. All rights reserved.

Table 158: DDR4-3200 Speed Bins and Operating Conditions

Notes 1–3 apply to the entire table

DDR4-3200 Speed Bin							-062Y[6]		-062E		-062		
CL-*n*RCD-*n*RP							22-22-22		22-22-22		24-24-24		
Parameter						Symbol	Min	Max	Min	Max	Min	Max	Unit
Internal READ command to first data						^{t}AA	13.75 (13.32)[4]	19.00[6]	13.75	19.00[6]	15.00	19.00[6]	ns
Internal READ command to first data with read DBI enabled						$^{t}AA_DBI$	^{t}AA (MIN) + 4*n*CK	^{t}AA (MAX) + 4*n*CK	^{t}AA (MIN) + 4*n*CK	^{t}AA (MAX) + 4*n*CK	^{t}AA (MIN) + 4*n*CK	^{t}AA (MAX) + 4*n*CK	ns
ACTIVATE-to-internal READ or WRITE delay time						^{t}RCD	13.75 (13.32)[4]	–	13.75	–	15.00	–	ns
PRECHARGE command period						^{t}RP	13.75 (13.32)[4]	–	13.75	–	15.00	–	ns
ACTIVATE-to-PRECHARGE command period						^{t}RAS	32	9 × $^{t}REFI$	32	9 × $^{t}REFI$	32	9 × $^{t}REFI$	ns
ACTIVATE-to-ACTIVATE or REFRESH command period						$^{t}RC[5]$	^{t}RAS + ^{t}RP	–	^{t}RAS + ^{t}RP	–	^{t}RAS + ^{t}RP	–	ns
Data Rate Max (MT/s)	**Equivalent Speed Bin**	**$^{t}AAmin$ (ns): non-DBI**	**READ CL: non-DBI**	**READ CL: DBI**	**WRITE CWL**	**Symbol**	**Min**	**Max**	**Min**	**Max**	**Min**	**Max**	**Unit**
1333	-	13.50	9	11	9	^{t}CK (AVG)	1.500	1.900[6]	Reserved		Reserved		ns
	-	15.00	10	12		^{t}CK (AVG)			1.500	1.900[6]	1.500	1.900[6]	ns
1600	-125E	13.75	11	13	9, 11	^{t}CK (AVG)	1.250	<1.500	1.250	<1.500	Reserved		ns
	-125	15.00	12	14		^{t}CK (AVG)					1.250	<1.500	ns
1866	-107E	13.92	13	15	10, 12	^{t}CK (AVG)	1.071	<1.250	1.071	<1.250	Reserved		ns
	-107	15.00	14	16		^{t}CK (AVG)					1.071	<1.250	ns
2133	-093E	14.06	15	18	11, 14	^{t}CK (AVG)	0.937	<1.071	0.937	<1.071	Reserved		ns
	-093	15.00	16	19		^{t}CK (AVG)					0.937	<1.071	ns

CCM005-1406124318-10453
16gb_ddr4_dram.pdf - Rev. H 8/2021 EN
Micron Technology, Inc. reserves the right to change products or specifications without notice.
© 2018 Micron Technology, Inc. All rights reserved.

DDR4-3200 Speed Bin							-062Y[6]		-062E		-062		
CL-*n*RCD-*n*RP							22-22-22		22-22-22		24-24-24		
Parameter						Symbol	Min	Max	Min	Max	Min	Max	Unit
2400	-083E	13.32	16	19	12, 16	^{t}CK (AVG)	0.833	<0.937	Reserved		Reserved		ns
	-083	14.16	17	20		^{t}CK (AVG)			0.833	<0.937			ns
	-083D	15.00	18	21		^{t}CK (AVG)					0.833	<0.937	ns
2666	-075E	13.50	18	21	14, 18	^{t}CK (AVG)	0.750	<0.833	Reserved		Reserved		ns
	-075	14.25	19	22		^{t}CK (AVG)			0.750	<0.833			ns
	-075D	15.00	20	23		^{t}CK (AVG)					0.750	<0.833	ns
2933	-068E	13.64	20	24	16, 20	^{t}CK (AVG)	Reserved		Reserved		Reserved		ns
	-068	14.32	21	25		^{t}CK (AVG)	0.682	<0.750	0.682	<0.750			ns
	-068D	15.00	22	26		^{t}CK (AVG)			0.682	<0.750	0.682	<0.750	ns
	–	16.37	24	28		^{t}CK (AVG)					0.682	<0.750	ns
3200	-062E	13.75	22	26	16, 20	^{t}CK (AVG)	0.625	<0.682	0.625	<0.682	Reserved		ns
	-062	15.00	24	28		^{t}CK (AVG)					0.625	<0.682	ns
Supported CL settings							9–22, 24		10–22, 24		10, 12, 14, 16, 18, 20, 22, 24		*n*CK
Supported CL settings with read DBI							11–16, 18–23, 25-26, 28		12–16, 18–23, 25-26, 28		12, 14, 16, 19, 21, 23, 26, 28		*n*CK
Supported CWL settings							9–12, 14, 16, 18, 20		9–12, 14, 16, 18, 20		9–12, 14, 16, 18, 20		*n*CK

Notes: 1. Speed Bin table is only valid with DLL enabled.
2. When operating in 2^{t}CK WRITE preamble mode, CWL must be programmed to a value at least 1 clock greater than the lowest CWL setting supported in the applicable ^{t}CK range.
3. The programmed value of CWL must be less than or equal to the programmed value of CL.
4. This value applies to non-native ^{t}CK-CL-*n*RCD-*n*RP combinations.
5. When calculating ^{t}RC in clocks, values may not be used in a combination that violate ^{t}RAS or ^{t}RP.
6. This value exceeds the JEDEC requirement in order to allow additional flexibility, especially for components. However, JEDEC SPD compliance may force modules to only support the JEDEC defined value, please refer to the SPD documentation.

Micron Technology, Inc. reserves the right to change products or specifications without notice.
© 2018 Micron Technology, Inc. All rights reserved.

CCM005-1406124318-10453
16gb_ddr4_dram.pdf - Rev. H 8/2021 EN

Refresh Parameters By Device Density

Table 159: Refresh Parameters by Device Density

Parameter	Symbol		2Gb	4Gb	8Gb	16Gb	Unit	Notes
REF command to ACT or REF command time	^{t}RFC (All bank groups)		160	260	350	350	ns	
Average periodic refresh interval	^{t}REFI	-40°C ≤ T_C ≤ 85°C	7.8	7.8	7.8	7.8	µs	
		85°C < T_C ≤ 95°C	3.9	3.9	3.9	3.9	µs	1
		95°C < T_C ≤ 105°C	1.95	1.95	1.95	1.95	µs	1

Notes: 1. Users should refer to the DRAM supplier data sheet and/or the DIMM SPD to determine if the devices support these options or requirements.

Micron Technology, Inc. reserves the right to change products or specifications without notice.
© 2018 Micron Technology, Inc. All rights reserved.

Electrical Characteristics and AC Timing Parameters

Table 160: Electrical Characteristics and AC Timing Parameters: DDR4-1600 through DDR4-2400

Parameter		Symbol	DDR4-1600		DDR4-1866		DDR4-2133		DDR4-2400		Unit	Notes
			Min	Max	Min	Max	Min	Max	Min	Max		
Clock Timing												
Clock period average (DLL off mode)		^{t}CK (AVG, DLL_OFF)	8	20	8	20	8	20	8	20	ns	
Clock period average		^{t}CK (AVG, DLL_ON)	1.25	1.9	1.071	1.9	0.937	1.9	0.833	1.9	ns	3 , 13
High pulse width average		^{t}CH (AVG)	0.48	0.52	0.48	0.52	0.48	0.52	0.48	0.52	^{t}CK (AVG)	
Low pulse width average		^{t}CL (AVG)	0.48	0.52	0.48	0.52	0.48	0.52	0.48	0.52	^{t}CK (AVG)	
Clock period jitter	Total	^{t}JITper_tot	–63	63	–54	54	–47	47	–42	42	ps	17 , 18
	Deterministic	^{t}JITper_dj	–31	31	–27	27	–23	23	–21	21	ps	17
	DLL locking	^{t}JITper,lck	–50	50	–43	43	–38	38	-33	33	ps	
Clock absolute period		^{t}CK (ABS)	MIN = ^{t}CK (AVG) MIN + ^{t}JITper_tot MIN; MAX = ^{t}CK (AVG) MAX + ^{t}JITper_tot MAX								ps	
Clock absolute high pulse width (includes duty cycle jitter)		^{t}CH (ABS)	0.45	–	0.45	–	0.45	–	0.45	–	^{t}CK (AVG)	
Clock absolute low pulse width (includes duty cycle jitter)		^{t}CL (ABS)	0.45	–	0.45	–	0.45	–	0.45	–	^{t}CK (AVG)	
Cycle-to-cycle jitter	Total	^{t}JITcc _tot	–	125	–	107	–	94	–	83	ps	
	DLL locking	^{t}JITcc,lck	–	100	–	86	–	75	–	67	ps	

CCM005-1406124318-10453
16gb_ddr4_dram.pdf - Rev. H 8/2021 EN
Micron Technology, Inc. reserves the right to change products or specifications without notice.
© 2018 Micron Technology, Inc. All rights reserved.

Table 160: Electrical Characteristics and AC Timing Parameters: DDR4-1600 through DDR4-2400 (Continued)

Parameter		Symbol	DDR4-1600		DDR4-1866		DDR4-2133		DDR4-2400		Unit	Notes
			Min	Max	Min	Max	Min	Max	Min	Max		
Cumulative error across	2 cycles	^{t}ERR2per	–92	92	–79	79	–69	69	–61	61	ps	
	3 cycles	^{t}ERR3per	–109	109	–94	94	–82	82	–73	73	ps	
	4 cycles	^{t}ERR4per	–121	121	–104	104	–91	91	–81	81	ps	
	5 cycles	^{t}ERR5per	–131	131	–112	112	–98	98	–87	87	ps	
	6 cycles	^{t}ERR6per	–139	139	–119	119	–104	104	–92	92	ps	
	7 cycles	^{t}ERR7per	–145	145	–124	124	–109	109	–97	97	ps	
	8 cycles	^{t}ERR8per	–151	151	–129	129	–113	113	–101	101	ps	
	9 cycles	^{t}ERR9per	–156	156	–134	134	–117	117	–104	104	ps	
	10 cycles	^{t}ERR10per	–160	160	–137	137	–120	120	–107	107	ps	
	11 cycles	^{t}ERR11per	–164	164	–141	141	–123	123	–110	110	ps	
	12 cycles	^{t}ERR12per	–168	168	–144	144	–126	126	–112	112	ps	
	n = 13, 14 . . . 49, 50 cycles	^{t}ERR*n*per	^{t}ERR*n*per MIN = (1 + 0.68ln[*n*]) × ^{t}JITper_tot MIN ^{t}ERR*n*per MAX = (1 + 0.68ln[*n*]) × ^{t}JITper_tot MAX								ps	
DQ Input Timing												
Data setup time to DQS_t, DQS_c	Base (calibrated V_{REF})	^{t}DS	Refer to DQ Input Receiver Specification section (approximately 0.15^{t}CK to 0.28^{t}CK)								–	
	Noncalibrated V_{REF}	^{t}PDA_S	minimum of 0.5UI								UI	22
Data hold time from DQS_t, DQS_c	Base (calibrated V_{REF})	^{t}DH	Refer to DQ Input Receiver Specification section (approximately 0.15^{t}CK to 0.28^{t}CK)								–	
	Noncalibrated V_{REF}	^{t}PDA_H	minimum of 0.5UI								UI	22
DQ and DM minimum data pulse width for each input		^{t}DIPW	0.58	–	0.58	–	0.58	–	0.58	–	UI	
DQ Output Timing (DLL enabled)												
DQS_t, DQS_c to DQ skew, per group, per access		^{t}DQSQ	–	0.16	–	0.16	–	0.16	–	0.17	UI	
DQ output hold time from DQS_t, DQS_c		^{t}QH	0.76	–	0.76	–	0.76	–	0.74	–	UI	

CCM005-1406124318-10453
16gb_ddr4_dram.pdf - Rev. H 8/2021 EN
Micron Technology, Inc. reserves the right to change products or specifications without notice.
© 2018 Micron Technology, Inc. All rights reserved.

Table 160: Electrical Characteristics and AC Timing Parameters: DDR4-1600 through DDR4-2400 (Continued)

Parameter	Symbol	DDR4-1600		DDR4-1866		DDR4-2133		DDR4-2400		Unit	Notes
		Min	Max	Min	Max	Min	Max	Min	Max		
Data Valid Window per device: ^{t}QH - ^{t}DQSQ each device's output per UI	$^{t}DVW_{d}$	0.63		0.63		0.64		0.64		UI	
Data Valid Window per device, per pin: ^{t}QH - ^{t}DQSQ each device's output per UI	$^{t}DVW_{p}$	0.66	–	0.66	–	0.69	–	0.72	–	UI	
DQ Low-Z time from CK_t, CK_c	$^{t}LZDQ$	–450	225	–390	195	–360	180	–330	175	ps	
DQ High-Z time from CK_t, CK_c	$^{t}HZDQ$	–	225	–	195	–	180	–	175	ps	
DQ Strobe Input Timing											
DQS_t, DQS_c rising edge to CK_t, CK_c rising edge for 1^{t}CK preamble	$^{t}DQSS_{1ck}$	–0.27	0.27	–0.27	0.27	–0.27	0.27	–0.27	0.27	CK	
DQS_t, DQS_c rising edge to CK_t, CK_c rising edge for 2^{t}CK preamble	$^{t}DQSS_{2ck}$	NA		NA		NA		–0.50	0.50	CK	
DQS_t, DQS_c differential input low pulse width	$^{t}DQSL$	0.46	0.54	0.46	0.54	0.46	0.54	0.46	0.54	CK	
DQS_t, DQS_c differential input high pulse width	$^{t}DQSH$	0.46	0.54	0.46	0.54	0.46	0.54	0.46	0.54	CK	
DQS_t, DQS_c differential input high pulse width for 2^{t}CK preamble	$^{t}DQSH2PRE$	NA		NA		NA		1.46	-	CK	
DQS_t, DQS_c falling edge setup to CK_t, CK_c rising edge for 1^{t}CK preamble	$^{t}DSS_{1ck}$	0.18	–	0.18	–	0.18	–	0.18	–	CK	
DQS_t, DQS_c falling edge setup to CK_t, CK_c rising edge for 2^{t}CK preamble	$^{t}DSS_{2ck}$	NA		NA		NA		0	-	CK	
DQS_t, DQS_c falling edge hold from CK_t, CK_c rising edge for 1^{t}CK preamble	$^{t}DSH_{1ck}$	0.18	–	0.18	–	0.18	–	0.18	–	CK	
DQS_t, DQS_c falling edge hold from CK_t, CK_c rising edge for 2^{t}CK preamble	$^{t}DSH_{2ck}$	NA		NA		NA		0	-	CK	
DQS_t, DQS_c differential WRITE preamble for 1^{t}CK preamble	$^{t}WPRE_{1ck}$	0.9	–	0.9	–	0.9	–	0.9	–	CK	
DQS_t, DQS_c differential WRITE preamble for 2^{t}CK preamble	$^{t}WPRE_{2ck}$	NA		NA		NA		1.8	–	CK	
DQS_t, DQS_c differential WRITE postamble	$^{t}WPST$	0.33	–	0.33	–	0.33	–	0.33	–	CK	
DQS Strobe Output Timing (DLL enabled)											

Micron Technology, Inc. reserves the right to change products or specifications without notice.
© 2018 Micron Technology, Inc. All rights reserved.

CCM005-1406124318-10453
16gb_ddr4_dram.pdf - Rev. H 8/2021 EN

Table 160: Electrical Characteristics and AC Timing Parameters: DDR4-1600 through DDR4-2400 (Continued)

Parameter		Symbol	DDR4-1600		DDR4-1866		DDR4-2133		DDR4-2400		Unit	Notes
			Min	Max	Min	Max	Min	Max	Min	Max		
DQS_t, DQS_c rising edge output access time from rising CK_t, CK_c		^{t}DQSCK	–225	225	–195	195	–180	180	–175	175	ps	
DQS_t, DQS_c rising edge output variance window per DRAM		^{t}DQSCKi	–	370	–	330	–	310	–	290	ps	
DQS_t, DQS_c differential output high time		^{t}QSH	0.4	–	0.4	–	0.4	–	0.4	–	CK	
DQS_t, DQS_c differential output low time		^{t}QSL	0.4	–	0.4	–	0.4	–	0.4	–	CK	
DQS_t, DQS_c Low-Z time (RL - 1)		^{t}LZDQS	–450	225	–390	195	–360	180	–330	175	ps	
DQS_t, DQS_c High-Z time (RL + BL/2)		^{t}HZDQS	–	225	–	195	–	180	–	175	ps	
DQS_t, DQS_c differential READ preamble for 1^{t}CK preamble		^{t}RPRE$_{1ck}$	0.9	–	0.9	–	0.9	–	0.9	–	CK	20
DQS_t, DQS_c differential READ preamble for 2^{t}CK preamble		^{t}RPRE$_{2ck}$	NA		NA		NA		1.8	–	CK	20
DQS_t, DQS_c differential READ postamble		^{t}RPST	0.33	–	0.33	–	0.33	–	0.33	–	CK	21
Command and Address Timing												
DLL locking time		^{t}DLLK	597	–	597	–	768	–	768	–	CK	2, 4
CMD, ADDR setup time to CK_t, CK_c Base referenced to $V_{IH(AC)}$ and $V_{IL(AC)}$ levels	Base	^{t}IS	115	–	100	–	80	–	62	–	ps	
	V_{REFCA}	^{t}IS$_{VREF}$	215	–	200	–	180	–	162	–	ps	
CMD, ADDR hold time to CK_t, CK_c Base referenced to $V_{IH(DC)}$ and $V_{IL(DC)}$ levels	Base	^{t}IH	140	–	125	–	105	–	87	–	ps	
	V_{REFCA}	^{t}IH$_{VREF}$	215	–	200	–	180	–	162	–	ps	
CTRL, ADDR pulse width for each input		^{t}IPW	600	–	525	–	460	–	410	–	ps	
ACTIVATE to internal READ or WRITE delay		^{t}RCD	See Speed Bin Tables for ^{t}RCD								ns	
PRECHARGE command period		^{t}RP	See Speed Bin Tables for ^{t}RP								ns	
ACTIVATE-to-PRECHARGE command period		^{t}RAS	See Speed Bin Tables for ^{t}RAS								ns	12
ACTIVATE-to-ACTIVATE or REF command period		^{t}RC	See Speed Bin Tables for ^{t}RC								ns	12
ACTIVATE-to-ACTIVATE command period to different bank groups for 1/2KB page size		^{t}RRD_S (1/2KB)	MIN = greater of 4CK or 5ns		MIN = greater of 4CK or 4.2ns		MIN = greater of 4CK or 3.7ns		MIN = greater of 4CK or 3.3ns		CK	1

Micron Technology, Inc. reserves the right to change products or specifications without notice.
© 2018 Micron Technology, Inc. All rights reserved.

CCM005-1406124318-10453
16gb_ddr4_dram.pdf - Rev. H 8/2021 EN

Table 160: Electrical Characteristics and AC Timing Parameters: DDR4-1600 through DDR4-2400 (Continued)

Parameter	Symbol	DDR4-1600		DDR4-1866		DDR4-2133		DDR4-2400		Unit	Notes
		Min	Max	Min	Max	Min	Max	Min	Max		
ACTIVATE-to-ACTIVATE command period to different bank groups for 1KB page size	$^{t}RRD_S$ (1KB)	MIN = greater of 4CK or 5ns		MIN = greater of 4CK or 4.2ns		MIN = greater of 4CK or 3.7ns		MIN = greater of 4CK or 3.3ns		CK	1
ACTIVATE-to-ACTIVATE command period to different bank groups for 2KB page size	$^{t}RRD_S$ (2KB)	MIN = greater of 4CK or 6ns		MIN = greater of 4CK or 5.3ns		MIN = greater of 4CK or 5.3ns		MIN = greater of 4CK or 5.3ns		CK	1
ACTIVATE-to-ACTIVATE command period to same bank groups for 1/2KB page size	$^{t}RRD_L$ (1/2KB)	MIN = greater of 4CK or 6ns		MIN = greater of 4CK or 5.3ns		MIN = greater of 4CK or 5.3ns		MIN = greater of 4CK or 4.9ns		CK	1
ACTIVATE-to-ACTIVATE command period to same bank groups for 1KB page size	$^{t}RRD_L$ (1KB)	MIN = greater of 4CK or 6ns		MIN = greater of 4CK or 5.3ns		MIN = greater of 4CK or 5.3ns		MIN = greater of 4CK or 4.9ns		CK	1
ACTIVATE-to-ACTIVATE command period to same bank groups for 2KB page size	$^{t}RRD_L$ (2KB)	MIN = greater of 4CK or 7.5ns		MIN = greater of 4CK or 6.4ns		MIN = greater of 4CK or 6.4ns		MIN = greater of 4CK or 6.4ns		CK	1
Four ACTIVATE windows for 1/2KB page size	^{t}FAW (1/2KB)	MIN = greater of 16CK or 20ns		MIN = greater of 16CK or 17ns		MIN = greater of 16CK or 15ns		MIN = greater of 16CK or 13ns		ns	
Four ACTIVATE windows for 1KB page size	^{t}FAW (1KB)	MIN = greater of 20CK or 25ns		MIN = greater of 20CK or 23ns		MIN = greater of 20CK or 21ns		MIN = greater of 20CK or 21ns		ns	
Four ACTIVATE windows for 2KB page size	^{t}FAW (2KB)	MIN = greater of 28CK or 35ns		MIN = greater of 28CK or 30ns		MIN = greater of 28CK or 30ns		MIN = greater of 28CK or 30ns		ns	
WRITE recovery time	$^{t}WR_{1ck}$	MIN = 15ns								ns	1, 5, 9
	$^{t}WR_{2ck}$	MIN = 1CK + $^{t}WR_{1ck}$								CK	1, 5, 10
WRITE recovery time when CRC and DM are both enabled	$^{t}WR_CRC_DM_{1ck}$	MIN = $^{t}WR_{1ck}$ + greater of (4CK or 3.75ns)		MIN = $^{t}WR_{1ck}$ + greater of (5CK or 3.75ns)						CK	1, 6, 9
	$^{t}WR_CRC_DM_{2ck}$	MIN = 1CK + $^{t}WR_CRC_DM_{1ck}$								CK	1, 6, 10
Delay from start of internal WRITE transaction to internal READ command – Same bank group	$^{t}WTR_L_{1ck}$	MIN = greater of 4CK or 7.5ns								CK	1, 5, 9
	$^{t}WTR_L_{2ck}$	MIN = 1CK + $^{t}WTR_L_{1ck}$								CK	1, 5, 10
Delay from start of internal WRITE transaction to internal READ command – Same bank group when CRC and DM are both enabled	$^{t}WTR_L_CRC_DM_{1ck}$	MIN = $^{t}WTR_L_{1ck}$ + greater of (4CK or 3.75ns)		MIN = $^{t}WTR_L_{1ck}$ + greater of (5CK or 3.75ns)						CK	1, 6, 9
	$^{t}WTR_L_CRC_DM_{2ck}$	MIN = 1CK + $^{t}WTR_L_CRC_DM_{1ck}$								CK	1, 6, 10

Micron Technology, Inc. reserves the right to change products or specifications without notice.
© 2018 Micron Technology, Inc. All rights reserved.

CCM005-1406124318-10453
16gb_ddr4_dram.pdf - Rev. H 8/2021 EN

Table 160: Electrical Characteristics and AC Timing Parameters: DDR4-1600 through DDR4-2400 (Continued)

Parameter	Symbol	DDR4-1600		DDR4-1866		DDR4-2133		DDR4-2400		Unit	Notes
		Min	Max	Min	Max	Min	Max	Min	Max		
Delay from start of internal WRITE transaction to internal READ command – Different bank group	$^{t}WTR_S_{1ck}$	MIN = greater of (2CK or 2.5ns)								CK	1, 5, 7, 8, 9
	$^{t}WTR_S_{2ck}$	MIN = 1CK + $^{t}WTR_S_{1ck}$								CK	1, 5, 7, 8, 10
Delay from start of internal WRITE transaction to internal READ command – Different bank group when CRC and DM are both enabled	$^{t}WTR_S_CRC_DM_{1ck}$	MIN = $^{t}WTR_S_{1ck}$ + greater of (4CK or 3.75ns)		MIN = $^{t}WTR_S_{1ck}$ + greater of (5CK or 3.75ns)						CK	1, 6, 7, 8, 9
	$^{t}WTR_S_CRC_DM_{2ck}$	MIN = 1CK + $^{t}WTR_S_CRC_DM_{1ck}$								CK	1, 6, 7, 8, 10
READ-to-PRECHARGE time	^{t}RTP	MIN = greater of 4CK or 7.5ns								CK	1
CAS_n-to-CAS_n command delay to different bank group	$^{t}CCD_S$	4	–	4	–	4	–	4	–	CK	
CAS_n-to-CAS_n command delay to same bank group	$^{t}CCD_L$	MIN = greater of 4CK or 6.25ns	–	MIN = greater of 4CK or 5.355ns	–	MIN = greater of 4CK or 5.355ns	–	MIN = greater of 4CK or 5ns	–	CK	14
Auto precharge write recovery + precharge time	^{t}DAL (MIN)	MIN = WR + ROUND$^{t}RP/^{t}CK$ (AVG); MAX = N/A								CK	8
MRS Command Timing											
MRS command cycle time	^{t}MRD	8	–	8	–	8	–	8	–	CK	
MRS command cycle time in PDA mode	$^{t}MRD_PDA$	MIN = greater of (16nCK, 10ns)								CK	1
MRS command cycle time in CAL mode	$^{t}MRD_CAL$	MIN = ^{t}MOD + ^{t}CAL								CK	
MRS command update delay	^{t}MOD	MIN = greater of (24nCK, 15ns)								CK	1
MRS command update delay in PDA mode	$^{t}MOD_PDA$	MIN = ^{t}MOD								CK	
MRS command update delay in CAL mode	$^{t}MOD_CAL$	MIN = ^{t}MOD + ^{t}CAL								CK	
MRS command to DQS drive in preamble training	^{t}SDO	MIN = ^{t}MOD + 9ns									
MPR Command Timing											
Multipurpose register recovery time	$^{t}MPRR$	MIN = 1CK								CK	

Micron Technology, Inc. reserves the right to change products or specifications without notice.
© 2018 Micron Technology, Inc. All rights reserved.

Table 160: Electrical Characteristics and AC Timing Parameters: DDR4-1600 through DDR4-2400 (Continued)

Parameter	Symbol	DDR4-1600		DDR4-1866		DDR4-2133		DDR4-2400		Unit	Notes
		Min	Max	Min	Max	Min	Max	Min	Max		
Multipurpose register write recovery time	^{t}WR_MPR	MIN = ^{t}MOD + AL + PL									
CRC Error Reporting Timing											
CRC error to ALERT_n latency	^{t}CRC_ALERT	3	13	3	13	3	13	3	13	ns	
CRC ALERT_n pulse width	^{t}CRC_ALERT_PW	6	10	6	10	6	10	6	10	CK	
CA Parity Timing											
Parity latency	PL	4	–	4	–	4	–	5	–	CK	
Commands uncertain to be executed during this time	^{t}PAR_UNKNOWN	–	PL	–	PL	–	PL	–	PL	CK	
Delay from errant command to ALERT_n assertion	^{t}PAR_ALERT_ON	–	PL + 6ns	–	P L + 6ns	–	PL + 6ns	–	PL + 6ns	CK	
Pulse width of ALERT_n signal when asserted	^{t}PAR_ALERT_PW	48	96	56	112	64	128	72	144	CK	
Time from alert asserted until DES commands required in persistent CA parity mode	^{t}PAR_ALERT_RSP	–	43	–	50	–	57	–	64	CK	
CAL Timing											
CS_n to command address latency	^{t}CAL	3	–	4	–	4	–	5	–	CK	19
CS_n to command address latency in gear-down mode	^{t}CALg	N/A	–	N/A	–	N/A	–	N/A	–	CK	
MPSM Timing											
Command path disable delay upopn MPSM entry	^{t}MPED	MIN = ^{t}MOD (MIN) + ^{t}CPDED (MIN)								CK	1
Valid clock requirement after MPSM entry	^{t}CKMPE	MIN = ^{t}MOD (MIN) + ^{t}CPDED (MIN)								CK	1
Valid clock requirement before MPSM exit	^{t}CKMPX	MIN = ^{t}CKSRX (MIN)								CK	1
Exit MPSM to commands not requiring a locked DLL	^{t}XMP	^{t}XS (MIN)								CK	
Exit MPSM to commands requiring a locked DLL	^{t}XMPDLL	MIN = ^{t}XMP (MIN) + ^{t}XSDLL (MIN)								CK	1
CS setup time to CKE	^{t}MPX_S	MIN = ^{t}IS (MIN) + ^{t}IH (MIN)								ns	
CS_n HIGH hold time to CKE rising edge	^{t}MPX_HH	MIN = ^{t}XP								ns	

CCM005-1406124318-10453
16gb_ddr4_dram.pdf - Rev. H 8/2021 EN

Micron Technology, Inc. reserves the right to change products or specifications without notice.
© 2018 Micron Technology, Inc. All rights reserved.

Table 160: Electrical Characteristics and AC Timing Parameters: DDR4-1600 through DDR4-2400 (Continued)

Parameter		Symbol	DDR4-1600		DDR4-1866		DDR4-2133		DDR4-2400		Unit	Notes
			Min	Max	Min	Max	Min	Max	Min	Max		
CS_n LOW hold time to CKE rising edge		^{t}MPX_LH	12	^{t}XMP-10ns	12	^{t}XMP-10ns	12	^{t}XMP-10ns	12	^{t}XMP-10ns	ns	
Connectivity Test Timing												
TEN pin HIGH to CS_n LOW – Enter CT mode		^{t}CT_Enable	200	–	200	–	200	–	200	–	ns	
CS_n LOW and valid input to valid output		^{t}CT_Valid	–	200	–	200	–	200	–	200	ns	
CK_t, CK_c valid and CKE HIGH after TEN goes HIGH		^{t}CTCKE_Valid	10	–	10	–	10	–	10	–	ns	
Calibration and V_{REFDQ} Train Timing												
ZQCL command: Long calibration time	POWER-UP and RESET operation	^{t}ZQinit	1024	–	1024	–	1024	–	1024	–	CK	
	Normal operation	^{t}ZQoper	512	–	512	–	512	–	512	–	CK	
ZQCS command: Short calibration time		^{t}ZQCS	128	–	128	–	128	–	128	–	CK	
The V_{REF} increment/decrement step time		V_{REF_time}	MIN = 150ns									
Enter V_{REFDQ} training mode to the first write or V_{REFDQ} MRS command delay		^{t}VREFDQE	MIN = 150ns								ns	1
Exit V_{REFDQ} training mode to the first WRITE command delay		^{t}VREFDQX	MIN = 150ns								ns	1
Initialization and Reset Timing												
Exit reset from CKE HIGH to a valid command		^{t}XPR	MIN = ^{t}RFC1 + 10ns								ns	1
RESET_L pulse low after power stable		^{t}PW_RESET_S	1.0	–	1.0	–	1.0	–	1.0	–	µs	
RESET_L pulse low at power-up		^{t}PW_RESET_L	200	–	200	–	200	–	200	–	µs	
Begin power supply ramp to power supplies stable		^{t}VDDPR	MIN = N/A; MAX = 200								ms	
RESET_n LOW to power supplies stable		^{t}RPS	MIN = 0; MAX = 0								ns	
Refresh Timing												

Micron Technology, Inc. reserves the right to change products or specifications without notice.
© 2018 Micron Technology, Inc. All rights reserved.

CCM005-1406124318-10453
16gb_ddr4_dram.pdf - Rev. H 8/2021 EN

Table 160: Electrical Characteristics and AC Timing Parameters: DDR4-1600 through DDR4-2400 (Continued)

Parameter		Symbol	DDR4-1600		DDR4-1866		DDR4-2133		DDR4-2400		Unit	Notes
			Min	Max	Min	Max	Min	Max	Min	Max		
REFRESH-to-ACTIVATE or REFRESH command period (all bank groups)	4Gb	^{t}RFC1	MIN = 260								ns	1, 11
		^{t}RFC2	MIN = 160								ns	1, 11
		^{t}RFC4	MIN = 110								ns	1, 11
	8Gb	^{t}RFC1	MIN = 350								ns	1, 11
		^{t}RFC2	MIN = 260								ns	1, 11
		^{t}RFC4	MIN = 160								ns	1, 11
	16Gb	^{t}RFC1	MIN = 350								ns	1, 11
		^{t}RFC2	MIN = 260								ns	1, 11
		^{t}RFC4	MIN = 160								ns	1, 11
Average periodic refresh interval	-40°C ≤ T_C ≤ 85°C	^{t}REFI	MIN = N/A; MAX = 7.8								µs	11
	85°C < T_C ≤ 95°C	^{t}REFI	MIN = N/A; MAX = 3.9								µs	11
	95°C < T_C ≤ 105°C	^{t}REFI	MIN = N/A; MAX = 1.95								µs	11
Self Refresh Timing												
Exit self refresh to commands not requiring a locked DLL		^{t}XS	MIN = ^{t}RFC1 + 10ns								ns	1
Exit self refresh to commands not requiring a locked DLL in self refresh abort		^{t}XS_ABORT	MIN = ^{t}RFC4 + 10ns								ns	1
Exit self refresh to ZQCL, ZQCS and MRS (CL, CWL, WR, RTP and gear-down)		^{t}XS_FAST	MIN = ^{t}RFC4 + 10ns								ns	1
Exit self refresh to commands requiring a locked DLL		^{t}XSDLL	MIN = ^{t}DLLK (MIN)								CK	1
Minimum CKE low pulse width for self refresh entry to self refresh exit timing		^{t}CKESR	MIN = ^{t}CKE (MIN) + 1*n*CK								CK	1
Minimum CKE low pulse width for self refresh entry to self refresh exit timing when CA parity is enabled		^{t}CKESR_PAR	MIN = ^{t}CKE (MIN) + 1*n*CK + PL								CK	1
Valid clocks after self refresh entry (SRE) or power-down entry (PDE)		^{t}CKSRE	MIN = greater of (5CK, 10ns)								CK	1

Micron Technology, Inc. reserves the right to change products or specifications without notice.
© 2018 Micron Technology, Inc. All rights reserved.

CCM005-1406124318-10453
16gb_ddr4_dram.pdf - Rev. H 8/2021 EN

Table 160: Electrical Characteristics and AC Timing Parameters: DDR4-1600 through DDR4-2400 (Continued)

Parameter	Symbol	DDR4-1600		DDR4-1866		DDR4-2133		DDR4-2400		Unit	Notes
		Min	Max	Min	Max	Min	Max	Min	Max		
Valid clock requirement after self refresh entry or power-down when CA parity is enabled	^{t}CKSRE_PAR	MIN = greater of (5CK, 10ns) + PL								CK	1
Valid clocks before self refresh exit (SRX) or power-down exit (PDX), or reset exit	^{t}CKSRX	MIN = greater of (5CK, 10ns)								CK	1
Power-Down Timing											
Exit power-down with DLL on to any valid command	^{t}XP	MIN = greater of 4CK or 6ns								CK	1
Exit power-down with DLL on to any valid command when CA Parity is enabled.	^{t}XP _PAR	MIN = (greater of 4CK or 6ns) + PL								CK	1
CKE MIN pulse width	^{t}CKE (MIN)	MIN = greater of 3CK or 5ns								CK	1
Command pass disable delay	^{t}CPDED	4	–	4	–	4	–	4	–	CK	
Power-down entry to power-down exit timing	^{t}PD	MIN = ^{t}CKE (MIN); MAX = 9 × ^{t}REFI								CK	
Begin power-down period prior to CKE registered HIGH	^{t}ANPD	WL - 1CK								CK	
Power-down entry period: ODT either synchronous or asynchronous	PDE	Greater of ^{t}ANPD or ^{t}RFC - REFRESH command to CKE LOW time								CK	
Power-down exit period: ODT either synchronous or asynchronous	PDX	^{t}ANPD + ^{t}XSDLL								CK	
Power-Down Entry Minimum Timing											
ACTIVATE command to power-down entry	^{t}ACTPDEN	1	–	1	–	2	–	2	–	CK	
PRECHARGE/PRECHARGE ALL command to power-down entry	^{t}PRPDEN	1	–	1	–	2	–	2	–	CK	
REFRESH command to power-down entry	^{t}REFPDEN	1	–	1	–	2	–	2	–	CK	
MRS command to power-down entry	^{t}MRSPDEN	MIN = ^{t}MOD (MIN)								CK	1
READ/READ with auto precharge command to power-down entry	^{t}RDPDEN	MIN = RL + 4 + 1								CK	1
WRITE command to power-down entry (BL8OTF, BL8MRS, BC4OTF)	^{t}WRPDEN	MIN = WL + 4 + ^{t}WR/^{t}CK (AVG)								CK	1
WRITE command to power-down entry (BC4MRS)	^{t}WRPBC4DEN	MIN = WL + 2 + ^{t}WR/^{t}CK (AVG)								CK	1

Micron Technology, Inc. reserves the right to change products or specifications without notice.
© 2018 Micron Technology, Inc. All rights reserved.

CCM005-1406124318-10453
16gb_ddr4_dram.pdf - Rev. H 8/2021 EN

Table 160: Electrical Characteristics and AC Timing Parameters: DDR4-1600 through DDR4-2400 (Continued)

Parameter	Symbol	DDR4-1600		DDR4-1866		DDR4-2133		DDR4-2400		Unit	Notes
		Min	Max	Min	Max	Min	Max	Min	Max		
WRITE with auto precharge command to power-down entry (BL8OTF, BL8MRS,BC4OTF)	^{t}WRAPDEN	MIN = WL + 4 + WR + 1								CK	1
WRITE with auto precharge command to power-down entry (BC4MRS)	^{t}WRAPBC4DEN	MIN = WL + 2 + WR + 1								CK	1
ODT Timing											
Direct ODT turn-on latency	DODTLon	WL - 2 = CWL + AL + PL - 2								CK	
Direct ODT turn-off latency	DODTLoff	WL - 2 = CWL + AL + PL - 2								CK	
R_{TT} dynamic change skew	^{t}ADC	0.3	0.7	0.3	0.7	0.3	0.7	0.3	0.7	CK	
Asynchronous $R_{TT(NOM)}$ turn-on delay (DLL off)	^{t}AONAS	1	9	1	9	1	9	1	9	ns	
Asynchronous $R_{TT(NOM)}$ turn-off delay (DLL off)	^{t}AOFAS	1	9	1	9	1	9	1	9	ns	
ODT HIGH time with WRITE command and BL8	ODTH8 1^{t}CK	6	–	6	–	6	–	6	–	CK	
	ODTH8 2^{t}CK	NA		NA		NA		7	–		
ODT HIGH time without WRITE command or with WRITE command and BC4	ODTH4 1^{t}CK	4	–	4	–	4	–	4	–	CK	
	ODTH4 2^{t}CK	NA		NA		NA		5	–		
Write Leveling Timing											
First DQS_t, DQS_c rising edge after write leveling mode is programmed	^{t}WLMRD	40	–	40	–	40	–	40	–	CK	
DQS_t, DQS_c delay after write leveling mode is programmed	^{t}WLDQSEN	25	–	25	–	25	–	25	–	CK	
Write leveling setup from rising CK_t, CK_c crossing to rising DQS_t, DQS_c crossing	^{t}WLS	0.13	–	0.13	–	0.13	–	0.13	–	^{t}CK (AVG)	
Write leveling hold from rising DQS_t, DQS_c crossing to rising CK_t, CK_c crossing	^{t}WLH	0.13	–	0.13	–	0.13	–	0.13	–	^{t}CK (AVG)	
Write leveling output delay	^{t}WLO	0	9.5	0	9.5	0	9.5	0	9.5	ns	
Write leveling output error	^{t}WLOE	0	2	0	2	0	2	0	2	ns	
Gear-Down Timing (Not Supported Below DDR4-2666)											
Exit reset from CKE HIGH to a valid MRS gear-down	^{t}XPR_GEAR	N/A		N/A		N/A		N/A		CK	

Micron Technology, Inc. reserves the right to change products or specifications without notice.
© 2018 Micron Technology, Inc. All rights reserved.

CCM005-1406124318-10453
16gb_ddr4_dram.pdf - Rev. H 8/2021 EN

Table 160: Electrical Characteristics and AC Timing Parameters: DDR4-1600 through DDR4-2400 (Continued)

Parameter	Symbol	DDR4-1600		DDR4-1866		DDR4-2133		DDR4-2400		Unit	Notes
		Min	Max	Min	Max	Min	Max	Min	Max		
CKE HIGH assert to gear-down enable time)	^{t}XS_GEAR	N/A		N/A		N/A		N/A		CK	
MRS command to sync pulse time	^{t}SYNC_GEAR	N/A		N/A		N/A		N/A		CK	
Sync pulse to first valid command	^{t}CMD_GEAR	N/A		N/A		N/A		N/A		CK	
Gear-down setup time	^{t}GEAR_setup	N/A	–	N/A	–	N/A	–	N/A	–	CK	
Gear-down hold time	^{t}GEAR_hold	N/A	–	N/A	–	N/A	–	N/A	–	CK	

Notes: 1. Maximum limit not applicable.
2. Micron tDLLK values support the legacy JEDEC tDLLK specifications.
3. DDR4-1600 AC timing parameters apply if DRAM operates at lower than 1600 MT/s data rate.
4. Data rate is greater than or equal to 1066 Mb/s.
5. WRITE-to-READ when CRC and DM are both not enabled.
6. WRITE-to-READ delay when CRC and DM are both enabled.
7. The start of internal write transactions is defined as follows:
   - For BL8 (fixed by MRS and on-the-fly): rising clock edge four clock cycles after WL
   - For BC4 (on-the-fly): rising clock edge four clock cycles after WL
   - For BC4 (fixed by MRS): rising clock edge two clock cycles after WL
8. For these parameters, the device supports ^{t}nPARAM [nCK] = ROUND{^{t}PARAM [ns]/^{t}CK (AVG) [ns]} according to the rounding algorithms found in the Converting Time-Based Specifications to Clock-Based Requirements section, in clock cycles, assuming all input clock jitter specifications are satisfied.
9. When operating in 1^{t}CK WRITE preamble mode.
10. When operating in 2^{t}CK WRITE preamble mode.
11. When CA parity mode is selected and the DLLoff mode is used, each REF command requires an additional "PL" added to ^{t}RFC refresh time.
12. DRAM devices should be evenly addressed when being accessed. Disproportionate accesses to a particular row address may result in reduction of the product lifetime and/or reduction in data retention ability.
13. Applicable from ^{t}CK (AVG) MIN to ^{t}CK (AVG) MAX as stated in the Speed Bin tables.
14. JEDEC specifies a minimum of five clocks.
15. The maximum read postamble is bound by ^{t}DQSCK (MIN) plus ^{t}QSH (MIN) on the left side and ^{t}HZ(DQS) MAX on the right side.
16. The reference level of DQ output signal is specified with a midpoint as a widest part of output signal eye, which should be approximately 0.7 × V_{DDQ} as a center level of the static single-ended output peak-to-peak swing with a driver impedance of 34 ohms and an effective test load of 50 ohms to V_{TT} = V_{DDQ}.
17. JEDEC hasn't agreed upon the definition of the deterministic jitter; the user should focus on meeting the total limit.
18. Spread spectrum is not included in the jitter specification values. However, the input clock can accommodate spread-spectrum at a sweep rate in the range of 20–60 kHz with an additional 1% of ^{t}CK (AVG) as a long-term jitter component; however, the spread spectrum may not use a clock rate below ^{t}CK (AVG) MIN.
19. The actual ^{t}CAL minimum is the larger of 3 clocks or 3.748ns/^{t}CK; the table lists the applicable clocks required at targeted speed bin.

Micron Technology, Inc. reserves the right to change products or specifications without notice.
© 2018 Micron Technology, Inc. All rights reserved.

CCM005-1406124318-10453
16gb_ddr4_dram.pdf - Rev. H 8/2021 EN

20. The maximum READ preamble is bounded by ^{t}LZ(DQS) MIN on the left side and ^{t}DQSCK (MAX) on the right side. See figure in the Clock to Data Strobe Relationship section. Boundary of DQS Low-Z occurs one cycle earlier in 2^{t}CK toggle mode, as illustrated in the READ Preamble section.
21. DQ falling signal middle-point of transferring from HIGH to LOW to first rising edge of DQS differential signal cross-point.
22. The ^{t}PDA_S/^{t}PDA_H parameters may use the ^{t}DS/^{t}DH limits, respectively, if the signal is LOW the entire BL8.

Micron Technology, Inc. reserves the right to change products or specifications without notice.
© 2018 Micron Technology, Inc. All rights reserved.

Electrical Characteristics and AC Timing Parameters: 2666 Through 3200

Table 161: Electrical Characteristics and AC Timing Parameters

Parameter		Symbol	DDR4-2666		DDR4-2933		DDR4-3200		Reserved		Unit	Notes
			Min	Max	Min	Max	Min	Max	Min	Max		
Clock Timing												
Clock period average (DLL off mode)		^{t}CK (AVG, DLL_OFF)	8	20	8	20	8	20			ns	
Clock period average		^{t}CK (AVG, DLL_ON)	0.75	1.9	0.682	1.9	0.625	1.9			ns	3, 13
High pulse width average		^{t}CH (AVG)	0.48	0.52	0.48	0.52	0.48	0.52			^{t}CK (AVG)	
Low pulse width average		^{t}CL (AVG)	0.48	0.52	0.48	0.52	0.48	0.52			^{t}CK (AVG)	
Clock period jitter	Total	^{t}JITper_tot	–38	38	-34	34	–32	32			ps	17 , 18
	Deterministic	^{t}JITper_dj	–19	19	-17	17	–16	16			ps	17
	DLL locking	^{t}JITper,lck	–30	30	-27	27	–25	25			ps	
Clock absolute period		^{t}CK (ABS)	MIN = ^{t}CK (AVG) MIN + ^{t}JITper_tot MIN; MAX = ^{t}CK (AVG) MAX + ^{t}JITper_tot MAX								ps	
Clock absolute high pulse width (includes duty cycle jitter)		^{t}CH (ABS)	0.45	–	0.45	–	0.45	–			^{t}CK (AVG)	
Clock absolute low pulse width (includes duty cycle jitter)		^{t}CL (ABS)	0.45	–	0.45	–	0.45	–			^{t}CK (AVG)	
Cycle-to-cycle jitter	Total	^{t}JITcc _tot	–	75	–	68	–	62			ps	
	DLL locking	^{t}JITcc,lck	–	60	–	55	–	62			ps	

Micron Technology, Inc. reserves the right to change products or specifications without notice.
© 2018 Micron Technology, Inc. All rights reserved.

CCM005-1406124318-10453
16gb_ddr4_dram.pdf - Rev. H 8/2021 EN

Table 161: Electrical Characteristics and AC Timing Parameters (Continued)

Parameter		Symbol	DDR4-2666		DDR4-2933		DDR4-3200		Reserved		Unit	Notes
			Min	Max	Min	Max	Min	Max	Min	Max		
Cumulative error across	2 cycles	^{t}ERR2per	–55	55	-50	50	–46	46			ps	
	3 cycles	^{t}ERR3per	–66	66	-60	60	–55	55			ps	
	4 cycles	^{t}ERR4per	–73	73	-66	66	–61	61			ps	
	5 cycles	^{t}ERR5per	–78	78	-71	71	–65	65			ps	
	6 cycles	^{t}ERR6per	–83	83	-75	75	–69	69			ps	
	7 cycles	^{t}ERR7per	–87	87	-79	79	–73	73			ps	
	8 cycles	^{t}ERR8per	–91	91	-83	83	–76	76			ps	
	9 cycles	^{t}ERR9per	–94	94	-85	85	–78	78			ps	
	10 cycles	^{t}ERR10per	–96	96	-88	88	–80	80			ps	
	11 cycles	^{t}ERR11per	–99	99	-90	90	–83	83			ps	
	12 cycles	^{t}ERR12per	–101	101	-92	92	–84	84			ps	
	n = 13, 14 . . . 49, 50 cycles	^{t}ERR*n*per	^{t}ERR*n*per MIN = (1 + 0.68ln[*n*]) × ^{t}JITper_tot MIN ^{t}ERR*n*per MAX = (1 + 0.68ln[*n*]) × ^{t}JITper_tot MAX								ps	
DQ Input Timing												
Data setup time to DQS_t, DQS_c	Base (calibrated V_{REF})	^{t}DS	Refer to DQ Input Receiver Specification section (approximately 0.15^{t}CK to 0.28^{t}CK)								–	
	Non-calibrated V_{REF}	^{t}PDA_S	minimum of 0.5ui								UI	22
Data hold time from DQS_t, DQS_c	Base (calibrated V_{REF})	^{t}DH	Refer to DQ Input Receiver Specification section (approximately 0.15^{t}CK to 0.28^{t}CK)								–	
	Non-calibrated V_{REF}	^{t}PDA_H	minimum of 0.5UI								UI	22
DQ and DM minimum data pulse width for each input		^{t}DIPW	0.58	–	0.58	–	0.58	–			UI	
DQ Output Timing (DLL enabled)												
DQS_t, DQS_c to DQ skew, per group, per access		^{t}DQSQ	–	0.18	–	0.19	–	0.20			UI	
DQ output hold time from DQS_t, DQS_c		^{t}QH	0.74	–	0.72	–	0.70	–			UI	

CCM005-1406124318-10453
16gb_ddr4_dram.pdf - Rev. H 8/2021 EN
Micron Technology, Inc. reserves the right to change products or specifications without notice.
© 2018 Micron Technology, Inc. All rights reserved.

Table 161: Electrical Characteristics and AC Timing Parameters (Continued)

Parameter	Symbol	DDR4-2666		DDR4-2933		DDR4-3200		Reserved		Unit	Notes
		Min	Max	Min	Max	Min	Max	Min	Max		
Data Valid Window per device: ^{t}QH - ^{t}DQSQ each device's output per UI	$^{t}DVW_{d}$	0.64	–	0.64	–	0.64	–			UI	
Data Valid Window per device, per pin: ^{t}QH - ^{t}DQSQ each device's output per UI	$^{t}DVW_{p}$	0.72	–	0.72	–	0.72	–			UI	
DQ Low-Z time from CK_t, CK_c	^{t}LZDQ	–310	170	–280	165	–250	160			ps	
DQ High-Z time from CK_t, CK_c	^{t}HZDQ	–	170	–	165	–	160			ps	
DQ Strobe Input Timing											
DQS_t, DQS_c rising edge to CK_t, CK_c rising edge for 1^{t}CK preamble	$^{t}DQSS_{1ck}$	–0.27	0.27	–0.27	0.27	–0.27	0.27			CK	
DQS_t, DQS_c rising edge to CK_t, CK_c rising edge for 2^{t}CK preamble	$^{t}DQSS_{2ck}$	–0.50	0.50	–0.50	0.50	–0.50	0.50			CK	
DQS_t, DQS_c differential input low pulse width	^{t}DQSL	0.46	0.54	0.46	0.54	0.46	0.54			CK	
DQS_t, DQS_c differential input high pulse width	^{t}DQSH	0.46	0.54	0.46	0.54	0.46	0.54			CK	
DQS_t, DQS_c differential input high pulse width for 2^{t}CK preamble	^{t}DQSH2PRE	1.46	-	1.46	-	1.46	-			CK	
DQS_t, DQS_c falling edge setup to CK_t, CK_c rising edge for 1^{t}CK preamble	$^{t}DSS_{1ck}$	0.18	–	0.18	–	0.18	–			CK	
DQS_t, DQS_c falling edge setup to CK_t, CK_c rising edge for 2^{t}CK preamble	$^{t}DSS_{2ck}$	0	–	0	–	0	–			CK	
DQS_t, DQS_c falling edge hold from CK_t, CK_c rising edge for 1^{t}CK preamble	$^{t}DSH_{1ck}$	0.18	–	0.18	–	0.18	–			CK	
DQS_t, DQS_c falling edge hold from CK_t, CK_c rising edge for 2^{t}CK preamble	$^{t}DSH_{2ck}$	0	–	0	–	0	–			CK	
DQS_t, DQS_c differential WRITE preamble for 1^{t}CK preamble	$^{t}WPRE_{1ck}$	0.9	–	0.9	–	0.9	–			CK	
DQS_t, DQS_c differential WRITE preamble for 2^{t}CK preamble	$^{t}WPRE_{2ck}$	1.8	–	1.8	–	1.8	–			CK	
DQS_t, DQS_c differential WRITE postamble	^{t}WPST	0.33	–	0.33	–	0.33	–			CK	

Micron Technology, Inc. reserves the right to change products or specifications without notice.
© 2018 Micron Technology, Inc. All rights reserved.

CCM005-1406124318-10453
16gb_ddr4_dram.pdf - Rev. H 8/2021 EN

Table 161: Electrical Characteristics and AC Timing Parameters (Continued)

Parameter		Symbol	DDR4-2666		DDR4-2933		DDR4-3200		Reserved		Unit	Notes
			Min	Max	Min	Max	Min	Max	Min	Max		
DQS Strobe Output Timing (DLL enabled)												
DQS_t, DQS_c rising edge output access time from rising CK_t, CK_c		^{t}DQSCK	–170	170	–165	165	–160	160			ps	
DQS_t, DQS_c rising edge output variance window per DRAM		^{t}DQSCKi	–	270	–	265	–	260			ps	
DQS_t, DQS_c differential output high time		^{t}QSH	0.40	–	0.40	–	0.40	–			CK	
DQS_t, DQS_c differential output low time		^{t}QSL	0.40	–	0.40	–	0.40	–			CK	
DQS_t, DQS_c Low-Z time (RL - 1)		^{t}LZDQS	–310	170	–280	165	–250	160			ps	
DQS_t, DQS_c High-Z time (RL + BL/2)		^{t}HZDQS	–	170	–	165	–	160			ps	
DQS_t, DQS_c differential READ preamble for 1^{t}CK preamble		$^{t}RPRE_{1ck}$	0.9	–	0.9	–	0.9	–			CK	20
DQS_t, DQS_c differential READ preamble for 2^{t}CK preamble		$^{t}RPRE_{2ck}$	1.8	–	1.8	–	1.8	–			CK	20
DQS_t, DQS_c differential READ postamble		^{t}RPST	0.33	–	0.33	–	0.33	–			CK	21
Command and Address Timing												
DLL locking time		^{t}DLLK	854	–	940	–	1024	–			CK	2, 4
CMD, ADDR setup time to CK_t, CK_c referenced to $V_{IH(AC)}$ and $V_{IL(AC)}$ levels	Base	^{t}IS	55	–	48	–	40	–			ps	
	V_{REFCA}	$^{t}IS_{VREF}$	145	–	138	–	130	–			ps	
CMD, ADDR hold time to CK_t, CK_c referenced to $V_{IH(DC)}$ and $V_{IL(DC)}$ levels	Base	^{t}IH	80	–	73	–	65	–			ps	
	V_{REFCA}	$^{t}IH_{VREF}$	145	–	138	–	130	–			ps	
CTRL, ADDR pulse width for each input		^{t}IPW	385	–	365	–	340	–			ps	
ACTIVATE to internal READ or WRITE delay		^{t}RCD	See Speed Bin Tables for ^{t}RCD								ns	
PRECHARGE command period		^{t}RP	See Speed Bin Tables for ^{t}RP								ns	
ACTIVATE-to-PRECHARGE command period		^{t}RAS	See Speed Bin Tables for ^{t}RAS								ns	12
ACTIVATE-to-ACTIVATE or REF command period		^{t}RC	See Speed Bin Tables for ^{t}RC								ns	12

CCM005-1406124318-10453
16gb_ddr4_dram.pdf - Rev. H 8/2021 EN
Micron Technology, Inc. reserves the right to change products or specifications without notice.
© 2018 Micron Technology, Inc. All rights reserved.

Table 161: Electrical Characteristics and AC Timing Parameters (Continued)

Parameter	Symbol	DDR4-2666		DDR4-2933		DDR4-3200		Reserved		Unit	Notes
		Min	Max	Min	Max	Min	Max	Min	Max		
ACTIVATE-to-ACTIVATE command period to different bank groups for 1/2KB page size	$^{t}RRD_S$ (1/2KB)	MIN = greater of 4CK or 3.0ns		MIN = greater of 4CK or 2.7ns		MIN = greater of 4CK or 2.5ns				CK	1
ACTIVATE-to-ACTIVATE command period to different bank groups for 1KB page size	$^{t}RRD_S$ (1KB)	MIN = greater of 4CK or 3.0ns		MIN = greater of 4CK or 2.7ns		MIN = greater of 4CK or 2.5ns				CK	1
ACTIVATE-to-ACTIVATE command period to different bank groups for 2KB page size	$^{t}RRD_S$ (2KB)	MIN = greater of 4CK or 5.3ns		MIN = greater of 4CK or 5.3ns		MIN = greater of 4CK or 5.3ns				CK	1
ACTIVATE-to-ACTIVATE command period to same bank groups for 1/2KB page size	$^{t}RRD_L$ (1/2KB)	MIN = greater of 4CK or 4.9ns		MIN = greater of 4CK or 4.9ns		MIN = greater of 4CK or 4.9ns				CK	1
ACTIVATE-to-ACTIVATE command period to same bank groups for 1KB page size	$^{t}RRD_L$ (1KB)	MIN = greater of 4CK or 4.9ns		MIN = greater of 4CK or 4.9ns		MIN = greater of 4CK or 4.9ns				CK	1
ACTIVATE-to-ACTIVATE command period to same bank groups for 2KB page size	$^{t}RRD_L$ (2KB)	MIN = greater of 4CK or 6.4ns		MIN = greater of 4CK or 6.4ns		MIN = greater of 4CK or 6.4ns				CK	1
Four ACTIVATE windows for 1/2KB page size	^{t}FAW (1/2KB)	MIN = greater of 16CK or 12ns		MIN = greater of 16CK or 10.875ns		MIN = greater of 16CK or 10ns				ns	
Four ACTIVATE windows for 1KB page size	^{t}FAW (1KB)	MIN = greater of 20CK or 21ns		MIN = greater of 20CK or 21ns		MIN = greater of 20CK or 21ns				ns	
Four ACTIVATE windows for 2KB page size	^{t}FAW (2KB)	MIN = greater of 28CK or 30ns		MIN = greater of 28CK or 30ns		MIN = greater of 28CK or 30ns				ns	
WRITE recovery time	$^{t}WR_{1ck}$	MIN = 15ns								ns	1, 5, 9
	$^{t}WR_{2ck}$	MIN = 1CK + $^{t}WR_{1ck}$								CK	1, 5, 10
WRITE recovery time when CRC and DM are both enabled	$^{t}WR_CRC_DM_{1ck}$	MIN = $^{t}WR_{1ck}$ + greater of (5CK or 3.75ns)								CK	1, 6, 9
WRITE recovery time when CRC and DM are both enabled	$^{t}WR_CRC_DM_{2ck}$	MIN = 1CK + $^{t}WR_CRC_DM_{1ck}$								CK	1, 6, 10
Delay from start of internal WRITE transaction to internal READ command – Same bank group	$^{t}WTR_L_{1ck}$	MIN = greater of 4CK or 7.5ns								CK	1, 5, 9
	$^{t}WTR_L_{2ck}$	MIN = 1CK + $^{t}WTR_L_{1ck}$								CK	1, 5, 10

Micron Technology, Inc. reserves the right to change products or specifications without notice.
© 2018 Micron Technology, Inc. All rights reserved.

CCM005-1406124318-10453
16gb_ddr4_dram.pdf - Rev. H 8/2021 EN

Table 161: Electrical Characteristics and AC Timing Parameters (Continued)

Parameter	Symbol	DDR4-2666		DDR4-2933		DDR4-3200		Reserved		Unit	Notes
		Min	Max	Min	Max	Min	Max	Min	Max		
Delay from start of internal WRITE transaction to internal READ command – Same bank group when CRC and DM are both enabled	$^{t}WTR_L_CRC_DM_{1ck}$	MIN = $^{t}WTR_L_{1ck}$ + greater of (5CK or 3.75ns)								CK	1, 6, 9
	$^{t}WTR_L_CRC_DM_{2ck}$	MIN = 1CK + $^{t}WTR_L_CRC_DM_{1ck}$								CK	1, 6, 10
Delay from start of internal WRITE transaction to internal READ command – Different bank group	$^{t}WTR_S_{1ck}$	MIN = greater of (2CK or 2.5ns)								CK	1, 5, 7, 8, 9
	$^{t}WTR_S_{2ck}$	MIN = 1CK + $^{t}WTR_S_{1ck}$								CK	1, 5, 7, 8, 10
Delay from start of internal WRITE transaction to internal READ command – Different bank group when CRC and DM are both enabled	$^{t}WTR_S_CRC_DM_{1ck}$	MIN = $^{t}WTR_S_{1ck}$ + greater of (5CK or 3.75ns)								CK	1, 6, 7, 8, 9
	$^{t}WTR_S_CRC_DM_{2ck}$	MIN = 1CK + $^{t}WTR_S_CRC_DM_{1ck}$								CK	1, 6, 7, 8, 10
READ-to-PRECHARGE time	^{t}RTP	MIN = greater of 4CK or 7.5ns								CK	1
CAS_n-to-CAS_n command delay to different bank group	$^{t}CCD_S$	4	–	4	–	4	–			CK	
CAS_n-to-CAS_n command delay to same bank group	$^{t}CCD_L$	MIN = greater of 4CK or 5ns	–	MIN = greater of 4CK or 5ns	–	MIN = greater of 4CK or 5ns	–			CK	14
Auto precharge write recovery + precharge time	^{t}DAL (MIN)	MIN = WR + ROUND$^{t}RP/^{t}CK$ (AVG); MAX = N/A								CK	8
MRS Command Timing											
MRS command cycle time	^{t}MRD	8	–	8	–	8	–			CK	
MRS command cycle time in PDA mode	$^{t}MRD_PDA$	MIN = greater of (16nCK, 10ns)									1
MRS command cycle time in CAL mode	$^{t}MRD_CAL$	MIN = ^{t}MOD + ^{t}CAL								CK	
MRS command update delay	^{t}MOD	MIN = greater of (24nCK, 15ns)								CK	1
MRS command update delay in PDA mode	$^{t}MOD_PDA$	MIN = ^{t}MOD								CK	
MRS command update delay in CAL mode	$^{t}MOD_CAL$	MIN = ^{t}MOD + ^{t}CAL								CK	
MRS command to DQS drive in preamble training	^{t}SDO	MIN = ^{t}MOD + 9ns									

Micron Technology, Inc. reserves the right to change products or specifications without notice.
© 2018 Micron Technology, Inc. All rights reserved.

CCM005-1406124318-10453
16gb_ddr4_dram.pdf - Rev. H 8/2021 EN

Table 161: Electrical Characteristics and AC Timing Parameters (Continued)

Parameter	Symbol	DDR4-2666		DDR4-2933		DDR4-3200		Reserved		Unit	Notes
		Min	Max	Min	Max	Min	Max	Min	Max		
MPR Command Timing											
Multipurpose register recovery time	^{t}MPRR	MIN = 1nCK								CK	
Multipurpose register write recovery time	^{t}WR_MPR	MIN = ^{t}MOD + AL + PL									
CRC Error Reporting Timing											
CRC error to ALERT_n latency	^{t}CRC_ALERT	3	13	3	13	3	13			ns	
CRC ALERT_n pulse width	^{t}CRC_ALERT_PW	6	10	6	10	6	10			CK	
CA Parity Timing											
Parity latency	PL	5	–	6	–	6	–			CK	
Commands uncertain to be executed during this time	^{t}PAR_UNKNOWN	–	PL	–	PL	–	PL			CK	
Delay from errant command to ALERT_n assertion	^{t}PAR_ALERT_ON	–	PL + 6ns	–	PL + 6ns	–	PL + 6ns			CK	
Pulse width of ALERT_n signal when asserted	^{t}PAR_ALERT_PW	80	160	88	176	96	192			CK	
Time from alert asserted until DES commands required in persistent CA parity mode	^{t}PAR_ALERT_RSP	–	71	–	78	–	85			CK	
CAL Timing											
CS_n to command address latency	^{t}CAL	5	–	6	–	6	–			CK	19
CS_n to command address latency in gear-down mode	^{t}CALg	6	–	8	–	8	–			CK	
MPSM Timing											
Command path disable delay upopn MPSM entry	^{t}MPED	MIN = ^{t}MOD (MIN) + ^{t}CPDED (MIN)								CK	1
Valid clock requirement after MPSM entry	^{t}CKMPE	MIN = ^{t}MOD (MIN) + ^{t}CPDED (MIN)								CK	1
Valid clock requirement before MPSM exit	^{t}CKMPX	MIN = ^{t}CKSRX (MIN)								CK	1
Exit MPSM to commands not requiring a locked DLL	^{t}XMP	^{t}XS (MIN)								CK	
Exit MPSM to commands requiring a locked DLL	^{t}XMPDLL	MIN = ^{t}XMP (MIN) + ^{t}XSDLL (MIN)								CK	1

Micron Technology, Inc. reserves the right to change products or specifications without notice.
© 2018 Micron Technology, Inc. All rights reserved.

CCM005-1406124318-10453
16gb_ddr4_dram.pdf - Rev. H 8/2021 EN

Table 161: Electrical Characteristics and AC Timing Parameters (Continued)

Parameter		Symbol	DDR4-2666		DDR4-2933		DDR4-3200		Reserved		Unit	Notes
			Min	Max	Min	Max	Min	Max	Min	Max		
CS setup time to CKE		^{t}MPX_S	MIN = ^{t}IS (MIN) + ^{t}IH (MIN)								ns	
CS_n HIGH hold time to CKE rising edge		^{t}MPX_HH	MIN = ^{t}XP								ns	
CS_n LOW hold time to CKE rising edge		^{t}MPX_LH	12	^{t}XMP-10ns	12	^{t}XMP-10ns	12	^{t}XMP-10ns			ns	
Connectivity Test Timing												
TEN pin HIGH to CS_n LOW – Enter CT mode		^{t}CT_Enable	200	–	200	–	200	–			ns	
CS_n LOW and valid input to valid output		^{t}CT_Valid	–	200	–	200	–	200			ns	
CK_t, CK_c valid and CKE HIGH after TEN goes HIGH		^{t}CTCKE_Valid	10	–	10	–	10	–			ns	
Calibration and V_{REFDQ} Train Timing												
ZQCL command: Long calibration time	POWER-UP and RESET operation	^{t}ZQinit	1024	–	1024	–	1024	–			CK	
	Normal operation	^{t}ZQoper	512	–	512	–	512	–			CK	
ZQCS command: Short calibration time		^{t}ZQCS	128	–	128	–	128	–			CK	
The V_{REF} increment/decrement step time		V_{REF_time}	MIN = 150ns									
Enter V_{REFDQ} training mode to the first write or V_{REFDQ} MRS command delay		^{t}VREFDQE	MIN = 150ns								ns	1
Exit V_{REFDQ} training mode to the first WRITE command delay		^{t}VREFDQX	MIN = 150ns								ns	1
Initialization and Reset Timing												
Exit reset from CKE HIGH to a valid command		^{t}XPR	MIN = ^{t}RFC1 + 10ns								ns	1
RESET_L pulse low after power stable		^{t}PW_RESET_S	1.0	–	1.0	–	1.0	–			µs	
RESET_L pulse low at power-up		^{t}PW_RESET_L	200	–	200	–	200	–			µs	
Begin power supply ramp to power supplies stable		^{t}VDDPR	MIN = N/A; MAX = 200								ms	
RESET_n LOW to power supplies stable		^{t}RPS	MIN = 0; MAX = 0								ns	

CCM005-1406124318-10453
16gb_ddr4_dram.pdf - Rev. H 8/2021 EN
Micron Technology, Inc. reserves the right to change products or specifications without notice.
© 2018 Micron Technology, Inc. All rights reserved.

Table 161: Electrical Characteristics and AC Timing Parameters (Continued)

Parameter		Symbol	DDR4-2666		DDR4-2933		DDR4-3200		Reserved		Unit	Notes
			Min	Max	Min	Max	Min	Max	Min	Max		
Refresh Timing												
REFRESH-to-ACTIVATE or REFRESH command period (all bank groups)	4Gb	^{t}RFC1	MIN = 260								ns	1, 11
		^{t}RFC2	MIN = 160								ns	1, 11
		^{t}RFC4	MIN = 110								ns	1, 11
	8Gb	^{t}RFC1	MIN = 350								ns	1, 11
		^{t}RFC2	MIN = 260								ns	1, 11
		^{t}RFC4	MIN = 160								ns	1, 11
	16Gb	^{t}RFC1	MIN = 350								ns	1, 11
		^{t}RFC2	MIN = 260								ns	1, 11
		^{t}RFC4	MIN = 160								ns	1, 11
Average periodic refresh interval	-40°C ≤ T_C ≤ 85°C	^{t}REFI	MIN = N/A; MAX = 7.8								µs	11
	85°C < T_C ≤ 95°C	^{t}REFI	MIN = N/A; MAX = 3.9								µs	11
	95°C < T_C ≤ 105°C	^{t}REFI	MIN = N/A; MAX = 1.95								µs	11
Self Refresh Timing												
Exit self refresh to commands not requiring a locked DLL		^{t}XS	MIN = ^{t}RFC1 + 10ns								ns	1
Exit self refresh to commands not requiring a locked DLL in self refresh abort		^{t}XS_ABORT	MIN = ^{t}RFC4 + 10ns								ns	1
Exit self refresh to ZQCL, ZQCS and MRS (CL, CWL, WR, RTP and gear-down)		^{t}XS_FAST	MIN = ^{t}RFC4 + 10ns								ns	1
Exit self refresh to commands requiring a locked DLL		^{t}XSDLL	MIN = ^{t}DLLK (MIN)								CK	1
Minimum CKE low pulse width for self refresh entry to self refresh exit timing		^{t}CKESR	MIN = ^{t}CKE (MIN) + 1*n*CK								CK	1
Minimum CKE low pulse width for self refresh entry to self refresh exit timing when CA parity is enabled		^{t}CKESR_par	MIN = ^{t}CKE (MIN) + 1*n*CK + PL								CK	1

Micron Technology, Inc. reserves the right to change products or specifications without notice.
© 2018 Micron Technology, Inc. All rights reserved.

CCM005-1406124318-10453
16gb_ddr4_dram.pdf - Rev. H 8/2021 EN

Table 161: Electrical Characteristics and AC Timing Parameters (Continued)

Parameter	Symbol	DDR4-2666		DDR4-2933		DDR4-3200		Reserved		Unit	Notes
		Min	Max	Min	Max	Min	Max	Min	Max		
Valid clocks after self refresh entry (SRE) or power-down entry (PDE)	^{t}CKSRE	MIN = greater of (5CK, 10ns)								CK	1
Valid clock requirement after self refresh entry or power-down when CA parity is enabled	^{t}CKSRE_par	MIN = greater of (5CK, 10ns) + PL								CK	1
Valid clocks before self refresh exit (SRX) or power-down exit (PDX), or reset exit	^{t}CKSRX	MIN = greater of (5CK, 10ns)								CK	1
Power-Down Timing											
Exit power-down with DLL on to any valid command	^{t}XP	MIN = greater of 4CK or 6ns								CK	1
Exit precharge power-down with DLL frozen to commands not requiring a locked DLL when CA Parity is enabled.	^{t}XP _PAR	MIN = (greater of 4CK or 6ns) + PL								CK	1
CKE MIN pulse width	^{t}CKE (MIN)	MIN = greater of 3CK or 5ns								CK	1
Command pass disable delay	^{t}CPDED	4	–	4	–	4	–			CK	
Power-down entry to power-down exit timing	^{t}PD	MIN = ^{t}CKE (MIN); MAX = 9 × ^{t}REFI								CK	
Begin power-down period prior to CKE registered HIGH	^{t}ANPD	WL - 1CK								CK	
Power-down entry period: ODT either synchronous or asynchronous	PDE	Greater of ^{t}ANPD or ^{t}RFC - REFRESH command to CKE LOW time								CK	
Power-down exit period: ODT either synchronous or asynchronous	PDX	^{t}ANPD + ^{t}XSDLL								CK	
Power-Down Entry Minimum Timing											
ACTIVATE command to power-down entry	^{t}ACTPDEN	2	–	2	–	2	–			CK	
PRECHARGE/PRECHARGE ALL command to power-down entry	^{t}PRPDEN	2	–	2	–	2	–			CK	
REFRESH command to power-down entry	^{t}REFPDEN	2	–	2	–	2	–			CK	
MRS command to power-down entry	^{t}MRSPDEN	MIN = ^{t}MOD (MIN)								CK	1
READ/READ with auto precharge command to power-down entry	^{t}RDPDEN	MIN = RL + 4 + 1								CK	1
WRITE command to power-down entry (BL8OTF, BL8MRS, BC4OTF)	^{t}WRPDEN	MIN = WL + 4 + ^{t}WR/^{t}CK (AVG)								CK	1

Micron Technology, Inc. reserves the right to change products or specifications without notice.
© 2018 Micron Technology, Inc. All rights reserved.

CCM005-1406124318-10453
16gb_ddr4_dram.pdf - Rev. H 8/2021 EN

Table 161: Electrical Characteristics and AC Timing Parameters (Continued)

Parameter	Symbol	DDR4-2666		DDR4-2933		DDR4-3200		Reserved		Unit	Notes
		Min	Max	Min	Max	Min	Max	Min	Max		
WRITE command to power-down entry (BC4MRS)	^{t}WRPBC4DEN	MIN = WL + 2 + ^{t}WR/^{t}CK (AVG)								CK	1
WRITE with auto precharge command to power-down entry (BL8OTF, BL8MRS,BC4OTF)	^{t}WRAPDEN	MIN = WL + 4 + WR + 1								CK	1
WRITE with auto precharge command to power-down entry (BC4MRS)	^{t}WRAPBC4DEN	MIN = WL + 2 + WR + 1								CK	1
ODT Timing											
Direct ODT turn-on latency	DODTLon	WL - 2 = CWL + AL + PL - 2								CK	
Direct ODT turn-off latency	DODTLoff	WL - 2 = CWL + AL + PL - 2								CK	
R_{TT} dynamic change skew	^{t}ADC	0.28	0.72	0.26	0.74	0.26	0.74			CK	
Asynchronous $R_{TT(NOM)}$ turn-on delay (DLL off)	^{t}AONAS	1	9	1	9	1	9			ns	
Asynchronous $R_{TT(NOM)}$ turn-off delay (DLL off)	^{t}AOFAS	1	9	1	9	1	9			ns	
ODT HIGH time with WRITE command and BL8	ODTH8 1^{t}CK	6	–	6	–	6	–			CK	
	ODTH8 2^{t}CK	7	–	7	–	7	–				
ODT HIGH time without WRITE command or with WRITE command and BC4	ODTH4 1^{t}CK	4	–	4	–	4	–			CK	
	ODTH4 2^{t}CK	5	–	5	–	5	–				
Write Leveling Timing											
First DQS_t, DQS_c rising edge after write leveling mode is programmed	^{t}WLMRD	40	–	40	–	40	–			CK	
DQS_t, DQS_c delay after write leveling mode is programmed	^{t}WLDQSEN	25	–	25	–	25	–			CK	
Write leveling setup from rising CK_t, CK_c crossing to rising DQS_t, DQS_c crossing	^{t}WLS	0.13	–	0.13	–	0.13	–			CK	
Write leveling hold from rising DQS_t, DQS_c crossing to rising CK_t, CK_c crossing	^{t}WLH	0.13	–	0.13	–	0.13	–			CK	
Write leveling output delay	^{t}WLO	0	9.5	0	9.5	0	9.5			ns	
Write leveling output error	^{t}WLOE	0	2	0	2	0	2			ns	
Gear-Down Timing											

CCM005-1406124318-10453
16gb_ddr4_dram.pdf - Rev. H 8/2021 EN

Micron Technology, Inc. reserves the right to change products or specifications without notice.
© 2018 Micron Technology, Inc. All rights reserved.

Table 161: Electrical Characteristics and AC Timing Parameters (Continued)

Parameter	Symbol	DDR4-2666		DDR4-2933		DDR4-3200		Reserved		Unit	Notes
		Min	Max	Min	Max	Min	Max	Min	Max		
Exit reset from CKE HIGH to a valid MRS gear-down	^{t}XPR_GEAR	^{t}XPR		^{t}XPR		^{t}XPR				CK	
CKE HIGH assert to gear-down enable time)	^{t}XS_GEAR	^{t}XS		^{t}XS		^{t}XS				CK	
MRS command to sync pulse time	^{t}SYNC_GEAR	^{t}MOD + 4CK		^{t}MOD + 4CK		^{t}MOD + 4CK				CK	
Sync pulse to first valid command	^{t}CMD_GEAR	^{t}MOD		^{t}MOD		^{t}MOD				CK	
Gear-down setup time	^{t}GEAR_setup	2CK	–	2CK	–	2CK	–			CK	
Gear-down hold time	^{t}GEAR_hold	2CK	–	2CK	–	2CK	–			CK	

Notes:
1. Maximum limit not applicable.
2. Micron tDLLK values support the legacy JEDEC tDLLK specifications.
3. DDR4-1600 AC timing parameters apply if DRAM operates at lower than 1600 MT/s data rate.
4. Data rate is greater than or equal to 1066 Mb/s.
5. WRITE-to-READ when CRC and DM are both not enabled.
6. WRITE-to-READ delay when CRC and DM are both enabled.
7. The start of internal write transactions is defined as follows:
   - For BL8 (fixed by MRS and on-the-fly): rising clock edge four clock cycles after WL
   - For BC4 (on-the-fly): rising clock edge four clock cycles after WL
   - For BC4 (fixed by MRS): rising clock edge two clock cycles after WL
8. For these parameters, the device supports ^{t}nPARAM [nCK] = ROUND{^{t}PARAM [ns]/^{t}CK (AVG) [ns]} according to the rounding algorithms found in the Converting Time-Based Specifications to Clock-Based Requirements section, in clock cycles, assuming all input clock jitter specifications are satisfied.
9. When operating in 1^{t}CK WRITE preamble mode.
10. When operating in 2^{t}CK WRITE preamble mode.
11. When CA parity mode is selected and the DLLoff mode is used, each REF command requires an additional "PL" added to ^{t}RFC refresh time.
12. DRAM devices should be evenly addressed when being accessed. Disproportionate accesses to a particular row address may result in reduction of the product lifetime and/or reduction in data retention ability.
13. Applicable from ^{t}CK (AVG) MIN to ^{t}CK (AVG) MAX as stated in the Speed Bin tables.
14. JEDEC specifies a minimum of five clocks.
15. The maximum read postamble is bound by ^{t}DQSCK (MIN) plus ^{t}QSH (MIN) on the left side and ^{t}HZ(DQS) MAX on the right side.
16. The reference level of DQ output signal is specified with a midpoint as a widest part of output signal eye, which should be approximately 0.7 × V_{DDQ} as a center level of the static single-ended output peak-to-peak swing with a driver impedance of 34 ohms and an effective test load of 50 ohms to V_{TT} = V_{DDQ}.
17. JEDEC hasn't agreed upon the definition of the deterministic jitter; the user should focus on meeting the total limit.

Micron Technology, Inc. reserves the right to change products or specifications without notice.
© 2018 Micron Technology, Inc. All rights reserved.

CCM005-1406124318-10453
16gb_ddr4_dram.pdf - Rev. H 8/2021 EN

18. Spread spectrum is not included in the jitter specification values. However, the input clock can accommodate spread-spectrum at a sweep rate in the range of 20–60 kHz with an additional 1% of ^{t}CK (AVG) as a long-term jitter component; however, the spread spectrum may not use a clock rate below ^{t}CK (AVG) MIN.
19. The actual ^{t}CAL minimum is the larger of 3 clocks or 3.748ns/^{t}CK; the table lists the applicable clocks required at targeted speed bin.
20. The maximum READ preamble is bounded by ^{t}LZ(DQS) MIN on the left side and ^{t}DQSCK (MAX) on the right side. See figure in the Clock to Data Strobe Relationship section. Boundary of DQS Low-Z occurs one cycle earlier in 2^{t}CK toggle mode, as illustrated in the READ Preamble section.
21. DQ falling signal middle-point of transferring from HIGH to LOW to first rising edge of DQS differential signal cross-point.
22. The ^{t}PDA_S/^{t}PDA_H parameters may use the ^{t}DS/^{t}DH limits, respectively, if the signal is LOW the entire BL8.

Micron Technology, Inc. reserves the right to change products or specifications without notice.
© 2018 Micron Technology, Inc. All rights reserved.

Converting Time-Based Specifications to Clock-Based Requirements

Software algorithms for calculation of timing parameters are subject to potential rounding errors when converting DRAM timing requirements to system clocks; for example, a memory clock with a nominal frequency of 933.33...3 MHz which yields a clock period of 1.071428571429...ns. It is unrealistic to represent all digits after the decimal point exactly and some sort of rounding needs to be done.

DDR4 SDRAM SPD-based specifications use a minimum granularity for SPD-associated timing parameters of 1ps. Clock periods such as ^{t}CK (AVG) MIN are defined to the nearest picosecond. For example, 1.071428571429...ns is stated as 1071ps. Parameters such as ^{t}AA MIN are specified in units of time (nanoseconds) and require mathematical computation to convert to system clocks (*n*CK). Rules for rounding allow optimization of device performance without violating device parameters. These SPD algorithms rely on results that are within *n*CK adjustment factors on device testing and specification to avoid losing performance due to rounding errors when using SPD-based parameters. Note that JEDEC also defines an *n*CK adjustment factor, but mandates the inverse *n*CK adjustment factor be used in case of conflicting results, so only the inverse *n*CK adjustment factor is discussed here.

Guidance converting SPD associated timing parameters to system clock requirements:

- Round the application clock period up to the nearest picosecond.
- Express the timing specification and application clock period in picoseconds; scaling a nanosecond-based parameter value by 1000 allows programmers to use integer math instead of real math by expressing timing in ps.
- Divide the picosecond-based parameter by the picoseconds based application clock period.
- Add an inverse *n*CK adjustment factor of 97.4%.
- Truncate down to the next lower integer value.
- *n*CK = Truncate[(parameter in ps)/(application ^{t}CK in ps) + (974/1000)].

Guidance converting nonSPD associated timing parameters to system clock requirements:

- Divide the time base specification (in ns) and divided by the clock period (in ns).
- The resultant is set to the next higher integer number of clocks.
- *n*CK = Ceiling[(parameter in ns/application ^{t}CK in ns)].

Micron Technology, Inc. reserves the right to change products or specifications without notice.
© 2018 Micron Technology, Inc. All rights reserved.

Options Tables

Table 162: Options – Speed Based

Function	Acronym	Data Rate						
		1600	1866	2133	2400	2666	2933	3200
Write leveling	WL	Yes	Yes	Yes	Yes	Yes	Yes	Yes
Temperature controlled refresh	TCR	Yes	Yes	Yes	Yes	Yes	Yes	Yes
Low-power auto self refresh	LPASR	Yes	Yes	Yes	Yes	Yes	Yes	Yes
Fine granularity refresh	FGR	Yes	Yes	Yes	Yes	Yes	Yes	Yes
Multipurpose register	MR	Yes	Yes	Yes	Yes	Yes	Yes	Yes
Data mask	DM	Yes	Yes	Yes	Yes	Yes	Yes	Yes
Data bus inversion	DBI	Yes	Yes	Yes	Yes	Yes	Yes	Yes
TDQS	–	Yes	Yes	Yes	Yes	Yes	Yes	Yes
ZQ calibration	ZQ CAL	Yes	Yes	Yes	Yes	Yes	Yes	Yes
V_{REFDQ} calibration	–	Yes	Yes	Yes	Yes	Yes	Yes	Yes
Per-DRAM addressability	Per DRAM	Yes	Yes	Yes	Yes	Yes	Yes	Yes
Mode register readout	–	Yes	Yes	Yes	Yes	Yes	Yes	Yes
Command/Address latency	CAL	Yes	Yes	Yes	Yes	Yes	Yes	Yes
Write CRC	CRC	Yes	Yes	Yes	Yes	Yes	Yes	Yes
CA parity	–	Yes	Yes	Yes	Yes	Yes	Yes	Yes
Gear-down mode	–	**No**	**No**	**No**	**No**	Yes	Yes	Yes
Programmable preamble	–	**No**	**No**	**No**	Yes	Yes	Yes	Yes
Maximum power saving mode	MPSM	Yes	Yes	Yes	Yes	Yes	Yes	Yes
Additive latency	AL	Yes	Yes	Yes	Yes	Yes	Yes	Yes
Connectivity test mode	CT	Yes	Yes	Yes	Yes	Yes	Yes	Yes
Hard post package repair mode	hPPR	Yes	Yes	Yes	Yes	Yes	Yes	Yes
Soft post package repair mode	sPPR	Yes	Yes	Yes	Yes	Yes	Yes	Yes
MBIST-PPR	MBIST-PPR	Yes	Yes	Yes	Yes	Yes	Yes	Yes

Micron Technology, Inc. reserves the right to change products or specifications without notice.
© 2018 Micron Technology, Inc. All rights reserved.

Table 163: Options – Width Based

Function	Acronym	Width		
		x4	x8	x16
Write leveling	WL	Yes	Yes	Yes
Temperature controlled refresh	TCR	Yes	Yes	Yes
Low-power auto self refresh	LPASR	Yes	Yes	Yes
Fine granularity refresh	FGR	Yes	Yes	Yes
Multipurpose register	MR	Yes	Yes	Yes
Data mask	DM	**No**	Yes	Yes
Data bus inversion	DBI	**No**	Yes	Yes
TDQS	–	**No**	Yes	**No**
ZQ calibration	ZQ CAL	Yes	Yes	Yes
V_{REFDQ} calibration	–	Yes	Yes	Yes
Per-DRAM addressability	Per DRAM	Yes	Yes	Yes
Mode regsiter readout	–	Yes	Yes	Yes
Command/Address latency	CAL	Yes	Yes	Yes
Write CRC	CRC	Yes	Yes	Yes
CA parity	–	Yes	Yes	Yes
Gear-down mode	–	Yes	Yes	Yes
Programmable preamble	–	Yes	Yes	Yes
Maximum power-down mode	MPSM	Yes	Yes	Yes
Additive latency	AL	Yes	Yes	Yes
Connectivity test mode	CT	JEDEC optional on 8Gb and larger densities **Micron supports on all densities**		Yes
Hard post package repair mode	hPPR	JEDEC optional on 4Gb **Micron supports on all densities**		
Soft post package repair mode	sPPR	JEDEC optional on 4Gb and 8Gb **Micron supports on all densities**		
MBIST-PPR	MBIST-PPR	JEDEC optional **Micron supports only on 8Gb Die Rev R and 16Gb Die Rev F**		

8000 S. Federal Way, P.O. Box 6, Boise, ID 83707-0006
208-368-4000, micron.com/support
Micron and the Micron logo are trademarks of Micron Technology, Inc.
All other trademarks are the property of their respective owners.
This data sheet contains minimum and maximum limits specified over the power supply and temperature range set forth herein.
Although considered final, these specifications are subject to change, as further product development and data characterization sometimes occur.

Micron Technology, Inc. reserves the right to change products or specifications without notice.
© 2018 Micron Technology, Inc. All rights reserved.