TPC 191209



Sample image

Order symbol: TPC 191209

Product nbr: 5824000

Description: Enclosure. PC

Remarks: Opaque cover

EAN: 6418074049797

El. number:

- Finland:
- Denmark:
- Sweden:

Including:

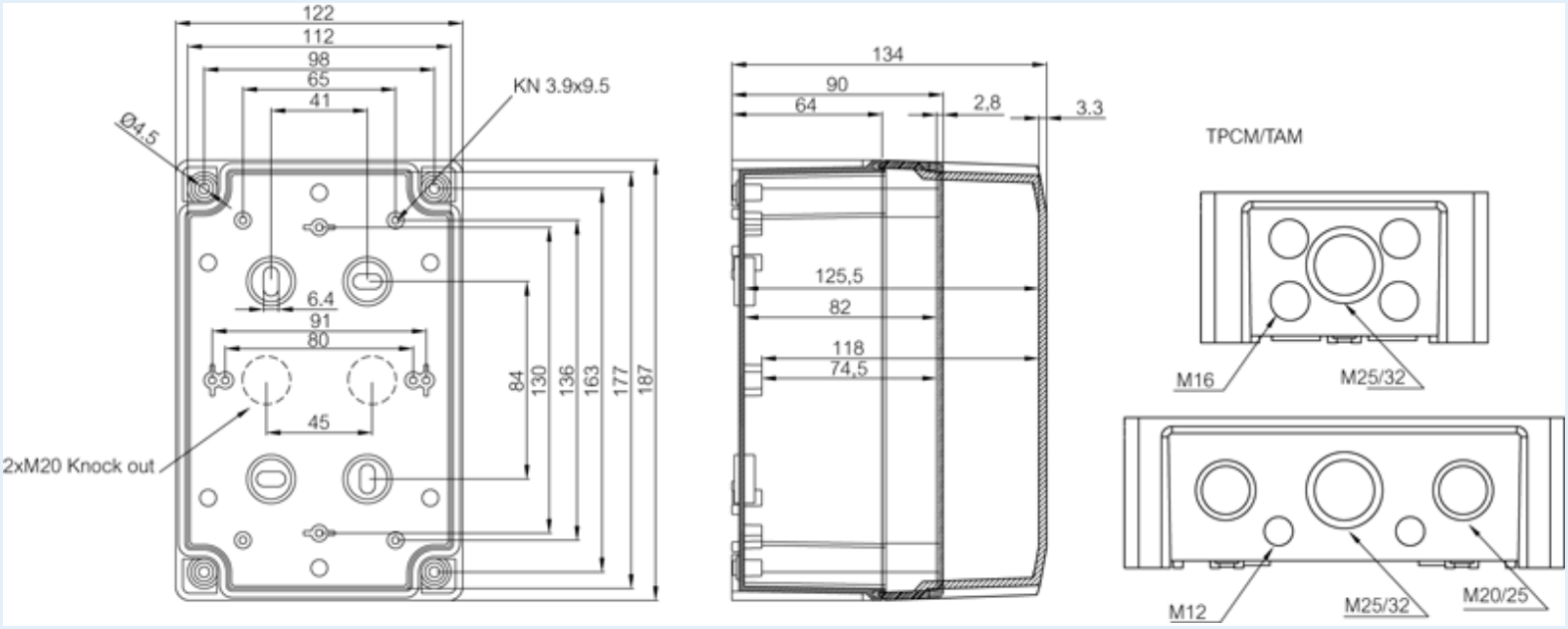

Dimensions:	**Height**	**Width**	**Depth**
mm:	187	122	90
inch:	7.36	4.8	3.54

Materials:

Material:	Polycarbonate
Base colour:	
Cover colour:	
Gasket material:	

Temperatures:

Accessories:

MIV 10	DIN-35 Mounting rail. for enclosures: (100 x 35 x 1)
MP 1912	Mounting plate. for enclosures: (140 x 100 x 0)
DH-3	DIN-35 Mounting rail. for enclosures: (140 x 35 x 1)
FP 10674	Mounting foot kit (2 pcs) incl. screws

Rating:

Ingress protection (EN 60529):	IP65;
Impact Resistance (EN 62262):	IK07; IK08;
Electrical insulation:	Totally insulated

Temperature °C (short term)::	-40 … 120
Temperature °C (continuous):	
Temperature °F (short term):	-40 … 250
Temperature °F (continuous):	-40 … 175

Halogen free (DIN/VDE 0472, Part 815):	1
UV resistance:	-
Flammability Rating:	UL 746C 5"
Glow Wire Test (IEC 695-2-1) °C:	960 °C
NEMA Class	

Certificates:

Certificate FI 40343

© Fibox Oy, Data subject to change without notice (printed: 04.08.2022)