MOSFET

Metal Oxide Semiconductor Field Effect Transistor

CoolMOS™ P6

600V CoolMOS™ P6 Power Transistor
IPZ60R125P6

Data Sheet

Rev. 2.0
Final

Power Management & Multimarket

1 Description

CoolMOS™ is a revolutionary technology for high voltage power MOSFETs, designed according to the superjunction (SJ) principle and pioneered by Infineon Technologies. CoolMOS™ P6 series combines the experience of the leading SJ MOSFET supplier with high class innovation. The offered devices provide all benefits of a fast switching SJ MOSFET while not sacrificing ease of use. Extremely low switching and conduction losses make switching applications even more efficient, more compact, lighter and cooler.

PG-TO 247-4

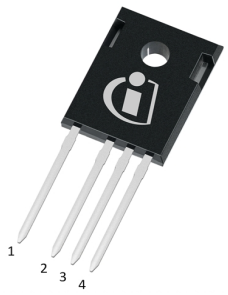

Features

- Increased MOSFET dv/dt ruggedness
- Extremely low losses due to very low FOM Rdson*Qg and Eoss
- Very high commutation ruggedness
- Best in class $R_{DS(on)}$ /package
- Easy to use/drive due to driver source pin for better control of the gate
- Pb-free plating, Halogen free mold compound
- Qualified for industrial grade applications according to JEDEC (J-STD20 and JESD22)
- 4-pin kelvin source concept

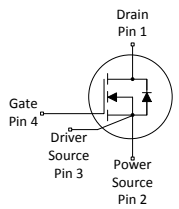

Applications

PFC stages, hard switching PWM stages and resonant switching stages for e.g. Computing, Server, Telecom and UPS.

Please note: For MOSFET paralleling the use of ferrite beads on the gate or separate totem poles is generally recommended.

Table 1 Key Performance Parameters

Parameter	Value	Unit
V_{DS} @ $T_{j,max}$	650	V
$R_{DS(on),max}$	125	mΩ
$Q_{g.typ}$	56	nC
$I_{D,pulse}$	87	A
E_{oss}@400V	7.2	µJ
Body diode di/dt	250	A/µs

Type / Ordering Code	Package	Marking	Related Links
IPZ60R125P6	PG-TO 247-4	6R125P6	see Appendix A

Table of Contents

Description 2
Maximum ratings 4
Thermal characteristics 5
Electrical characteristics 6
Electrical characteristics diagrams 8
Test Circuits 12
Package Outlines 13
Appendix A 14
Revision History 15
Disclaimer 15

2 Maximum ratings

at T_j = 25°C, unless otherwise specified

Table 2 Maximum ratings

Parameter	Symbol	Values			Unit	Note / Test Condition
		Min.	Typ.	Max.		
Continuous drain current[1]	I_D	- -	- -	30.0 19.0	A	T_C=25°C T_C=100°C
Pulsed drain current[2]	$I_{D,pulse}$	-	-	87	A	T_C=25°C
Avalanche energy, single pulse	E_{AS}	-	-	636	mJ	I_D=5.2A; V_{DD}=50V; see table 10
Avalanche energy, repetitive	E_{AR}	-	-	0.96	mJ	I_D=5.2A; V_{DD}=50V; see table 10
Avalanche current, repetitive	I_{AR}	-	-	5.2	A	-
MOSFET dv/dt ruggedness	dv/dt	-	-	100	V/ns	V_{DS}=0...400V
Gate source voltage (static)	V_{GS}	-20	-	20	V	static;
Gate source voltage (dynamic)	V_{GS}	-30	-	30	V	AC (f>1 Hz)
Power dissipation	P_{tot}	-	-	219	W	T_C=25°C
Storage temperature	T_{stg}	-55	-	150	°C	-
Operating junction temperature	T_j	-55	-	150	°C	-
Mounting torque	-	-	-	60	Ncm	M3 and M3.5 screws
Continuous diode forward current	I_S	-	-	26.0	A	T_C=25°C
Diode pulse current[2]	$I_{S,pulse}$	-	-	87	A	T_C=25°C
Reverse diode dv/dt[3]	dv/dt	-	-	15	V/ns	V_{DS}=0...400V, I_{SD}<=I_S, T_j=25°C see table 8
Maximum diode commutation speed	di_f/dt	-	-	250	A/µs	V_{DS}=0...400V, I_{SD}<=I_S, T_j=25°C see table 8

[1] Limited by $T_{j\,max}$. Maximum duty cycle D=0.75
[2] Pulse width t_p limited by $T_{j,max}$
[3] Identical low side and high side switch with identical R_G

3 Thermal characteristics

Table 3 Thermal characteristics

Parameter	Symbol	Values			Unit	Note / Test Condition
		Min.	Typ.	Max.		
Thermal resistance, junction - case	R_{thJC}	-	-	0.57	°C/W	-
Thermal resistance, junction - ambient	R_{thJA}	-	-	62	°C/W	leaded
Soldering temperature, wavesoldering only allowed at leads	T_{sold}	-	-	260	°C	1.6mm (0.063 in.) from case for 10s

4 Electrical characteristics

at T_j=25°C, unless otherwise specified

Table 4 Static characteristics

Parameter	Symbol	Values			Unit	Note / Test Condition
		Min.	Typ.	Max.		
Drain-source breakdown voltage	$V_{(BR)DSS}$	600	-	-	V	V_{GS}=0V, I_D=1mA
Gate threshold voltage	$V_{(GS)th}$	3.5	4.0	4.5	V	V_{DS}=V_{GS}, I_D=0.96mA
Zero gate voltage drain current	I_{DSS}	- -	- 10	2 -	µA	V_{DS}=600, V_{GS}=0V, T_j=25°C V_{DS}=600, V_{GS}=0V, T_j=150°C
Gate-source leakage current	I_{GSS}	-	-	100	nA	V_{GS}=20V, V_{DS}=0V
Drain-source on-state resistance	$R_{DS(on)}$	- -	0.113 0.293	0.125 -	Ω	V_{GS}=10V, I_D=11.6A, T_j=25°C V_{GS}=10V, I_D=11.6A, T_j=150°C
Gate resistance	R_G	-	1.7	-	Ω	f=1MHz, open drain

Table 5 Dynamic characteristics

Parameter	Symbol	Values			Unit	Note / Test Condition
		Min.	Typ.	Max.		
Input capacitance	C_{iss}	-	2660	-	pF	V_{GS}=0V, V_{DS}=100V, f=1MHz
Output capacitance	C_{oss}	-	110	-	pF	V_{GS}=0V, V_{DS}=100V, f=1MHz
Effective output capacitance, energy related[1)]	$C_{o(er)}$	-	90	-	pF	V_{GS}=0V, V_{DS}=0...400V
Effective output capacitance, time related[2)]	$C_{o(tr)}$	-	398	-	pF	I_D=constant, V_{GS}=0V, V_{DS}=0...400V
Turn-on delay time	$t_{d(on)}$	-	12	-	ns	V_{DD}=400V, V_{GS}=13V, I_D=14.5A, R_G=1.7Ω; see table 9
Rise time	t_r	-	6	-	ns	V_{DD}=400V, V_{GS}=13V, I_D=14.5A, R_G=1.7Ω; see table 9
Turn-off delay time	$t_{d(off)}$	-	41	-	ns	V_{DD}=400V, V_{GS}=13V, I_D=14.5A, R_G=1.7Ω; see table 9
Fall time	t_f	-	5	-	ns	V_{DD}=400V, V_{GS}=13 V, I_D=14.5A, R_G=1.7Ω; see table 9

Table 6 Gate charge characteristics

Parameter	Symbol	Values			Unit	Note / Test Condition
		Min.	Typ.	Max.		
Gate to source charge	Q_{gs}	-	16	-	nC	V_{DD}=400V, I_D=14.5A, V_{GS}=0 to 10V
Gate to drain charge	Q_{gd}	-	20	-	nC	V_{DD}=400V, I_D=14.5A, V_{GS}=0 to 10V
Gate charge total	Q_g	-	56	-	nC	V_{DD}=400V, I_D=14.5A, V_{GS}=0 to 10V
Gate plateau voltage	$V_{plateau}$	-	6.1	-	V	V_{DD}=400V, I_D=14.5A, V_{GS}=0 to 10V

[1)] $C_{o(er)}$ is a fixed capacitance that gives the same stored energy as C_{oss} while V_{DS} is rising from 0 to 400V
[2)] $C_{o(tr)}$ is a fixed capacitance that gives the same charging time as C_{oss} while V_{DS} is rising from 0 to 400V

Table 7 Reverse diode characteristics

Parameter	Symbol	Values			Unit	Note / Test Condition
		Min.	Typ.	Max.		
Diode forward voltage	V_{SD}	-	0.9	-	V	V_{GS}=0V, I_F=14.5A, T_j=25°C
Reverse recovery time	t_{rr}	-	385	-	ns	V_R=400V, I_F=14.5A, di_F/dt=100A/µs; see table 8
Reverse recovery charge	Q_{rr}	-	7	-	µC	V_R=400V, I_F=14.5A, di_F/dt=100A/µs; see table 8
Peak reverse recovery current	I_{rrm}	-	32	-	A	V_R=400V, I_F=14.5A, di_F/dt=100A/µs; see table 8

5 Electrical characteristics diagrams

Diagram 1: Power dissipation

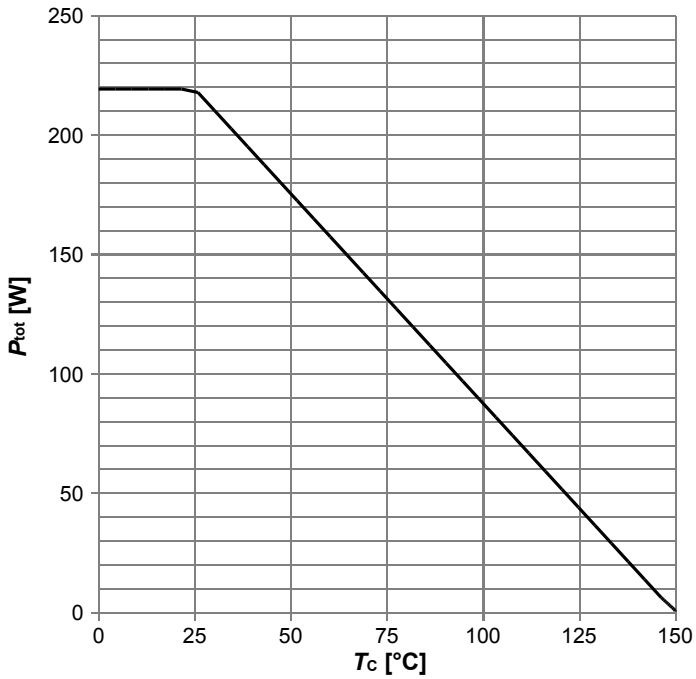

P_{tot}=f(T_C)

Diagram 2: Safe operating area

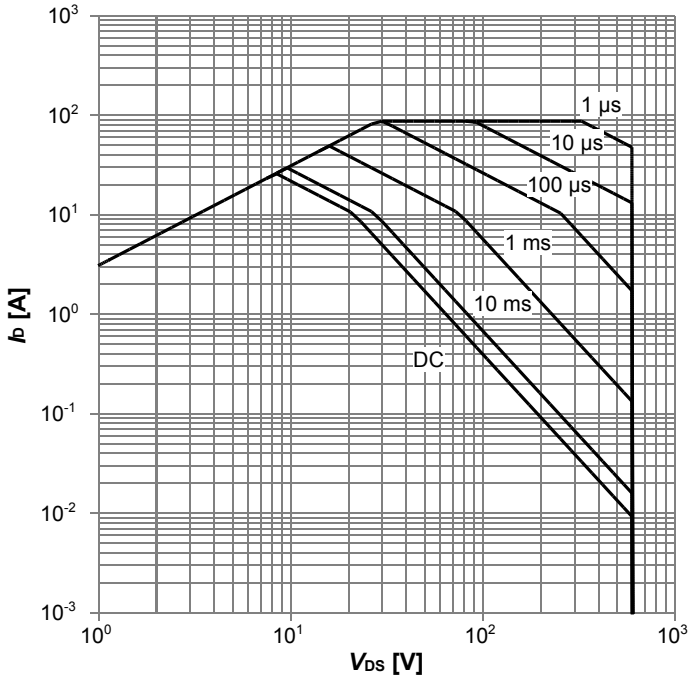

I_D=f(V_{DS}); T_C=25 °C; D=0; parameter: t_p

Diagram 3: Safe operating area

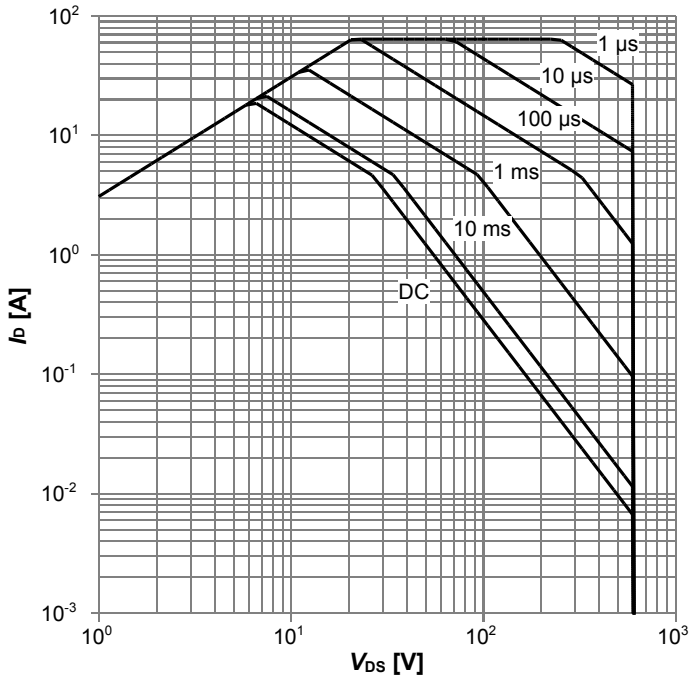

I_D=f(V_{DS}); T_C=80 °C; D=0; parameter: t_p

Diagram 4: Max. transient thermal impedance

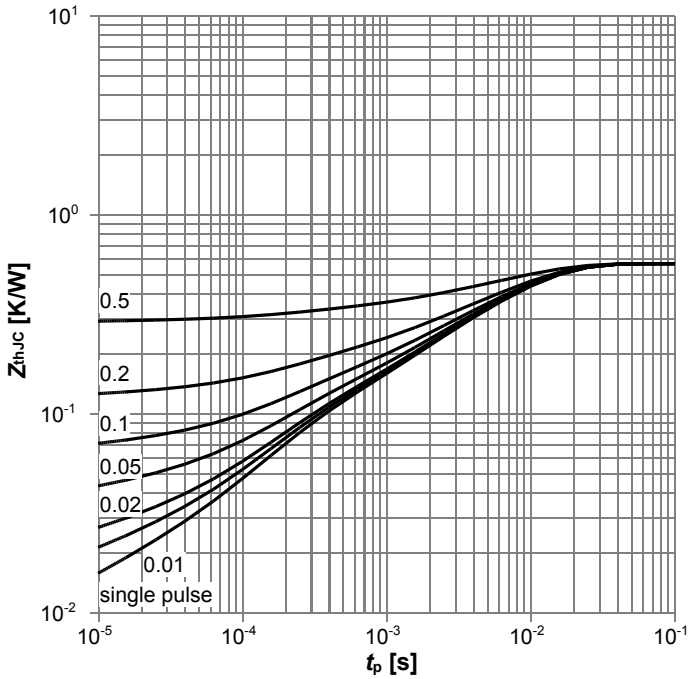

Z_{thJC} =f(t_P); parameter: D=t_p/T

Diagram 5: Typ. output characteristics

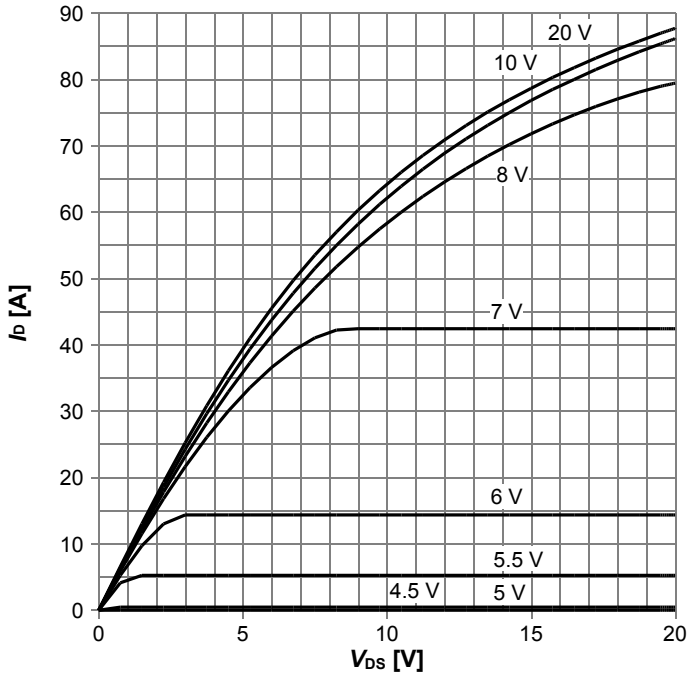

I_D=f(V_{DS}); T_j=25 °C; parameter: V_{GS}

Diagram 6: Typ. output characteristics

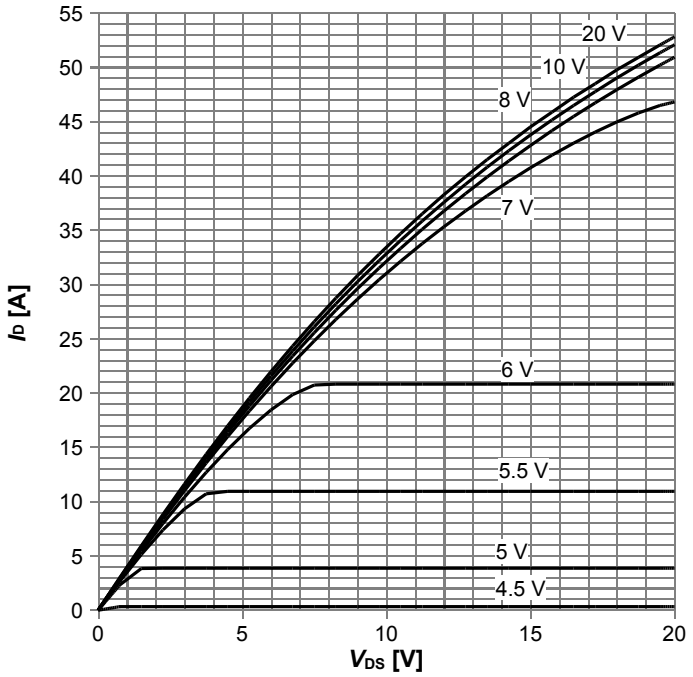

I_D=f(V_{DS}); T_j=125 °C; parameter: V_{GS}

Diagram 7: Typ. drain-source on-state resistance

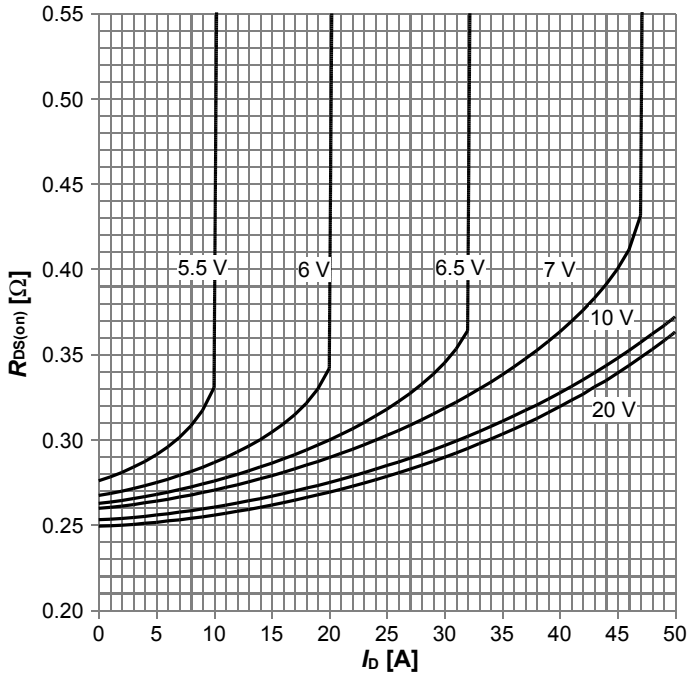

$R_{DS(on)}$=f(I_D); T_j=125 °C; parameter: V_{GS}

Diagram 8: Drain-source on-state resistance

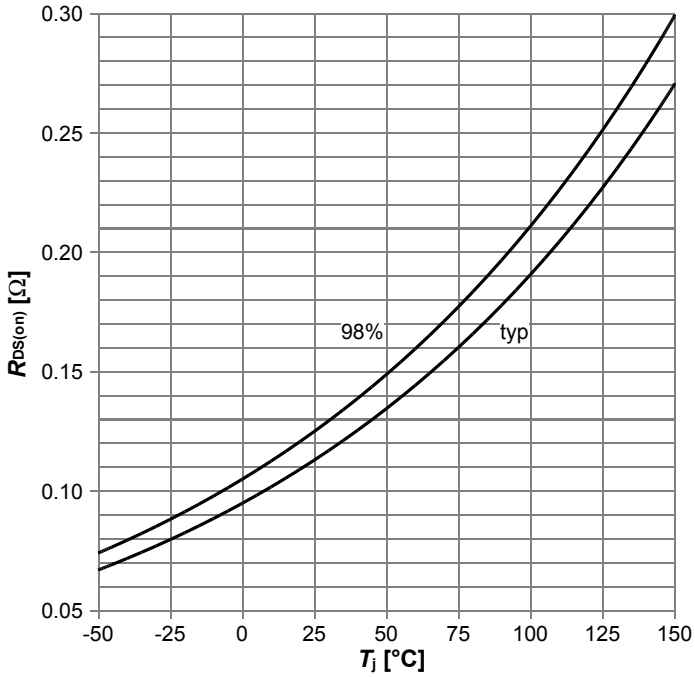

$R_{DS(on)}$=f(T_j); I_D=11.6 A; V_{GS}=10 V

Diagram 9: Typ. transfer characteristics

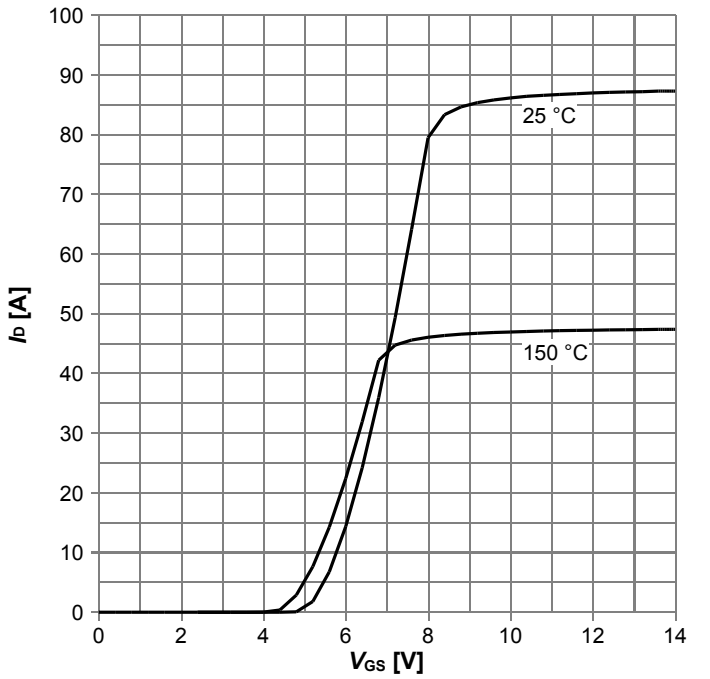

I_D=f(V_{GS}); V_{DS}=20V; parameter: T_j

Diagram 10: Typ. gate charge

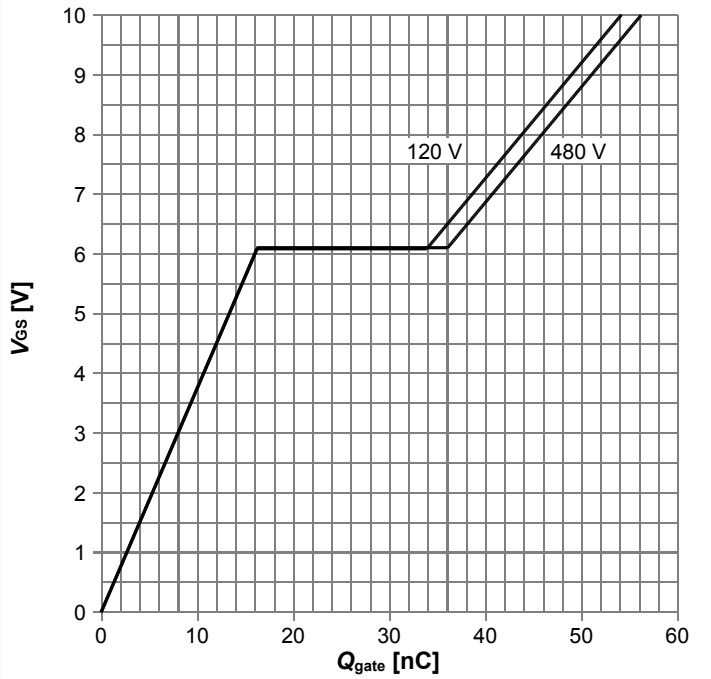

V_{GS}=f(Q_{gate}); I_D=14.5 A pulsed; parameter: V_{DD}

Diagram 11: Forward characteristics of reverse diode

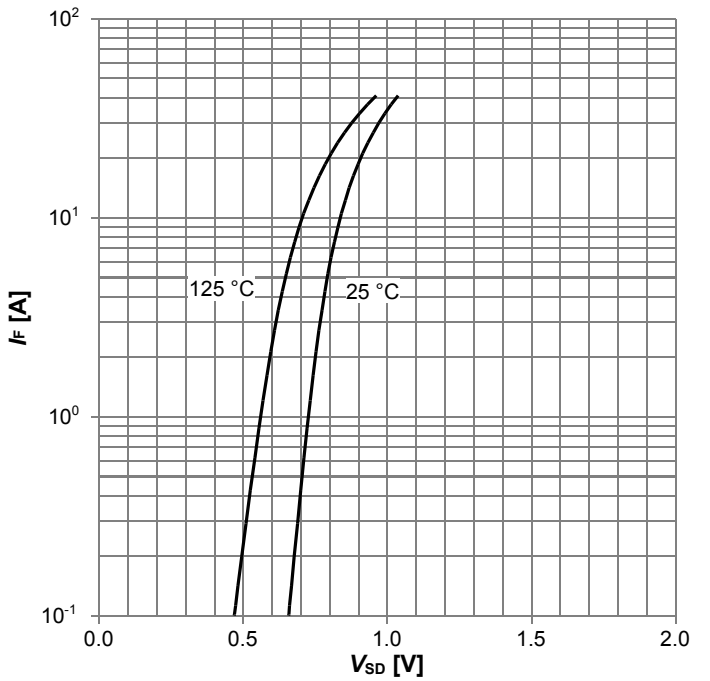

I_F=f(V_{SD}); parameter: T_j

Diagram 12: Avalanche energy

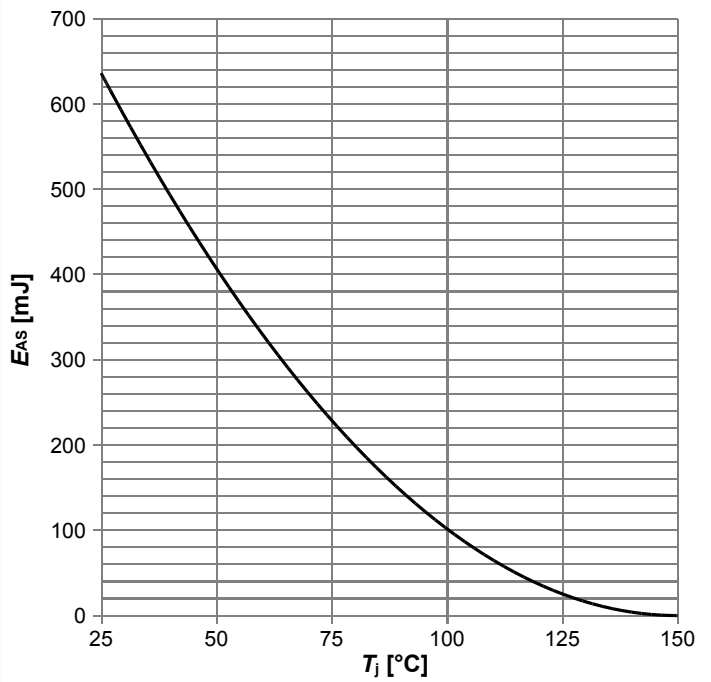

E_{AS}=f(T_j); I_D=5.2 A; V_{DD}=50 V

Diagram 13: Drain-source breakdown voltage

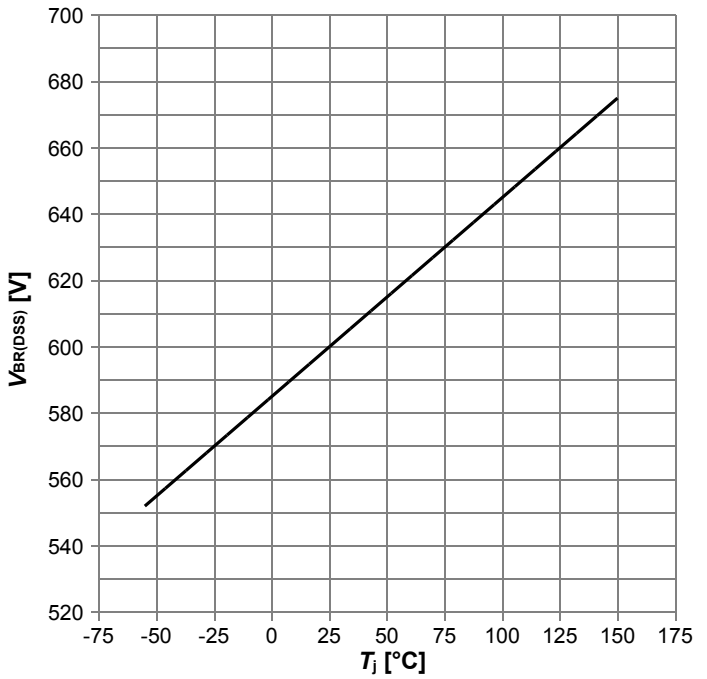

$V_{BR(DSS)}$=f(T_j); I_D=1 mA

Diagram 14: Typ. capacitances

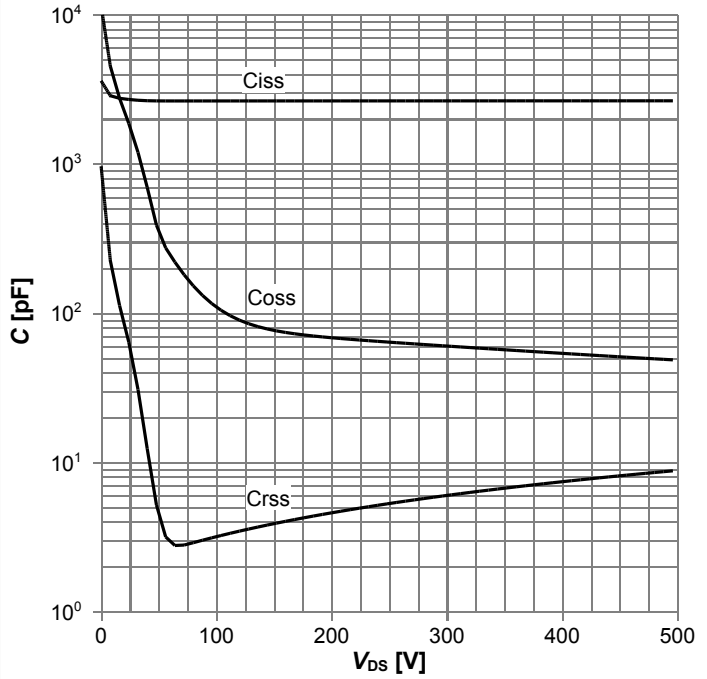

C=f(V_{DS}); V_{GS}=0 V; f=1 MHz

Diagram 15: Typ. Coss stored energy

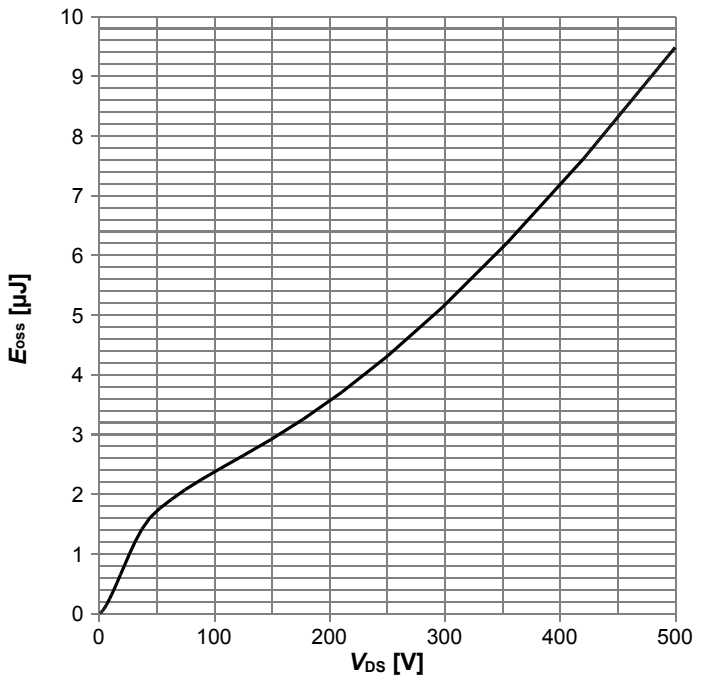

E_{oss}=f(V_{DS})

6 Test Circuits

Table 8 Diode characteristics

Test circuit for diode characteristics	Diode recovery waveform
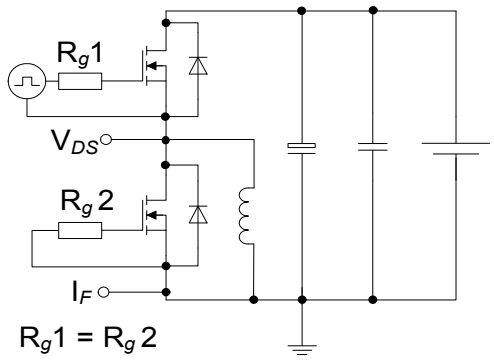	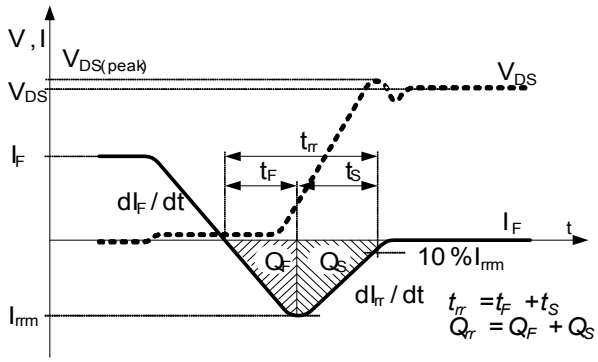

Table 9 switching times (ss)

Switching times test circuit for inductive load	Switching times waveform
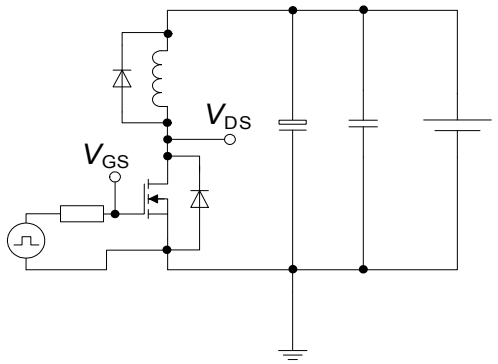	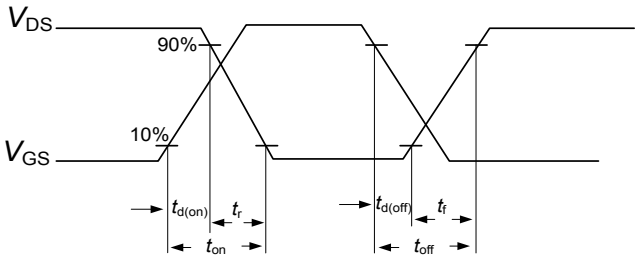

Table 10 Unclamped inductive load (ss)

Unclamped inductive load test circuit	Unclamped inductive waveform
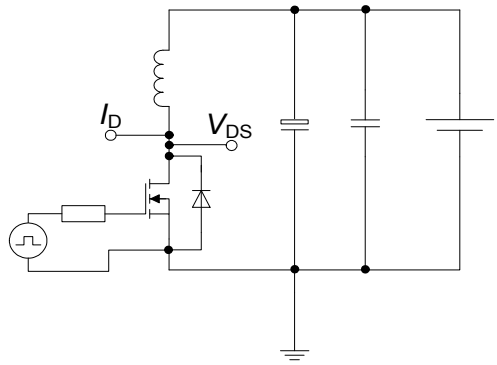	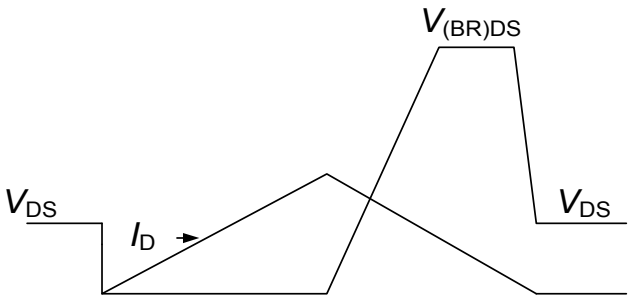

7 Package Outlines

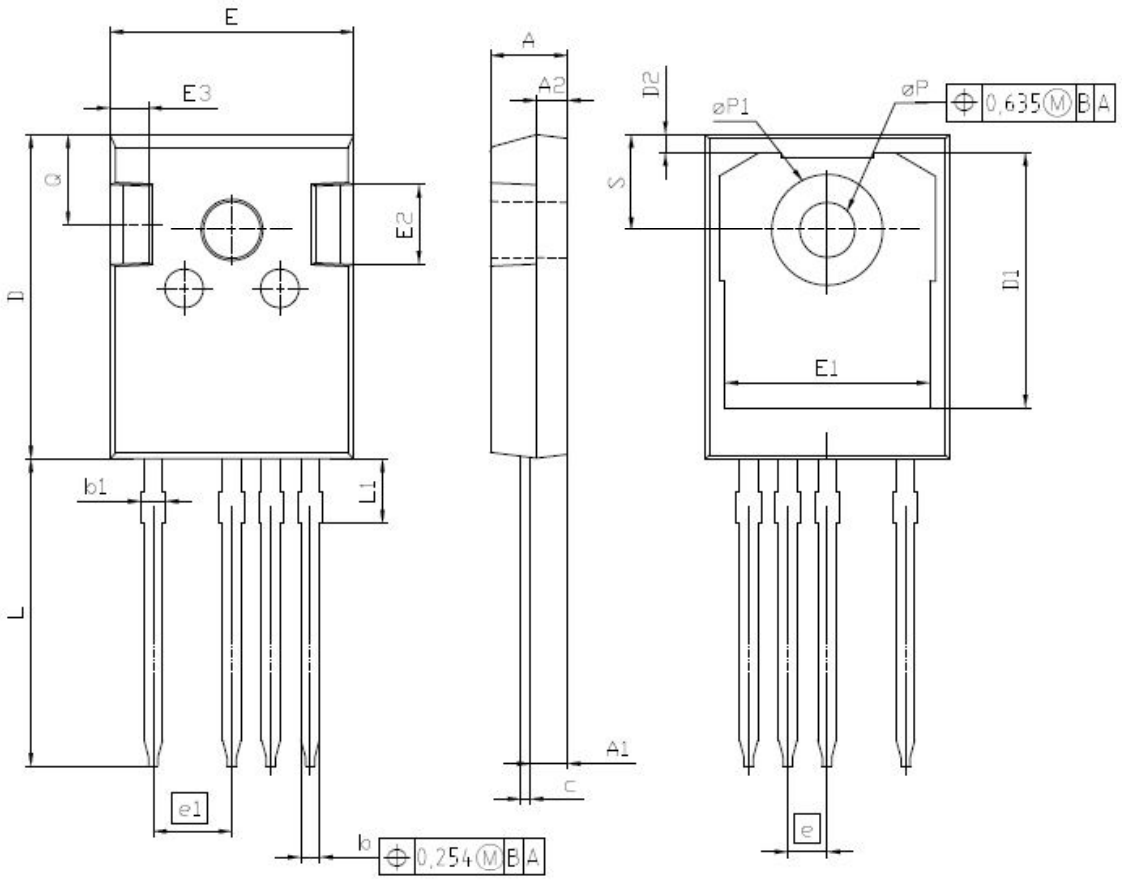

DIM	MILLIMETERS		INCHES	
	MIN	MAX	MIN	MAX
A	4.83	5.21	0.190	0.205
A1	2.29	2.54	0.090	0.100
A2	1.90	2.16	0.075	0.085
b	1.07	1.33	0.042	0.052
b1	1.10	1.70	0.043	0.067
c	0.50	0.70	0.020	0.028
D	20.80	21.10	0.819	0.831
D1	16.25	17.65	0.640	0.695
D2	0.95	1.35	0.037	0.053
E	15.70	16.13	0.618	0.635
E1	13.10	14.15	0.516	0.557
E2	3.68	5.10	0.145	0.201
E3	1.00	2.60	0.039	0.102
e	2.54 (BSC)		0.100 (BSC)	
e1	5.08		0.200	
N	4		4	
L	19.72	20.32	0.776	0.800
L1	4.02	4.40	0.158	0.173
øP	3.50	3.70	0.138	0.146
øP1	7.00	7.40	0.276	0.291
Q	5.49	6.00	0.216	0.236
S	6.04	6.30	0.238	0.248

DOCUMENT NO.
Z8B00168124

SCALE 0 5 7.5mm

EUROPEAN PROJECTION

ISSUE DATE
29-01-2013

REVISION
1

Figure 1 Outline PG-TO 247-4

8 Appendix A

Table 11 Related Links

- **IFX CoolMOS™ P6 Webpage:** www.infineon.com
- **IFX CoolMOS™ P6 application note:** www.infineon.com
- **IFX CoolMOS™ P6 simulation model:** www.infineon.com
- **IFX Design tools:** www.infineon.com

Revision History

IPZ60R125P6

Revision: 2015-07-13, Rev. 2.0

Previous Revision		
Revision	Date	Subjects (major changes since last revision)
2.0	2015-07-13	Release of final version

We Listen to Your Comments
Any information within this document that you feel is wrong, unclear or missing at all? Your feedback will help us to continuously improve the quality of this document. Please send your proposal (including a reference to this document) to:
erratum@infineon.com

Published by
Infineon Technologies AG
81726 München, Germany
© 2015 Infineon Technologies AG
All Rights Reserved.

Legal Disclaimer
The information given in this document shall in no event be regarded as a guarantee of conditions or characteristics. With respect to any examples or hints given herein, any typical values stated herein and/or any information regarding the application of the device, Infineon Technologies hereby disclaims any and all warranties and liabilities of any kind, including without limitation, warranties of non-infringement of intellectual property rights of any third party.

Information
For further information on technology, delivery terms and conditions and prices please contact your nearest Infineon Technologies Office (**www.infineon.com**).

Warnings
Due to technical requirements, components may contain dangerous substances. For information on the types in question, please contact the nearest Infineon Technologies Office.
The Infineon Technologies component described in this Data Sheet may be used in life-support devices or systems and/or automotive, aviation and aerospace applications or systems only with the express written approval of Infineon Technologies, if a failure of such components can reasonably be expected to cause the failure of that life-support, automotive, aviation and aerospace device or system or to affect the safety or effectiveness of that device or system. Life support devices or systems are intended to be implanted in the human body or to support and/or maintain and sustain and/or protect human life. If they fail, it is reasonable to assume that the health of the user or other persons may be endangered.