Views from "X" rotated

6-Pole
(5+1)

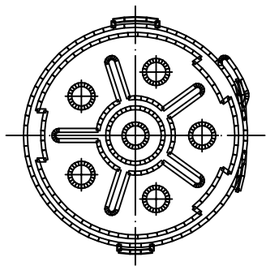

8-Pole

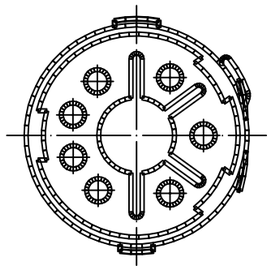

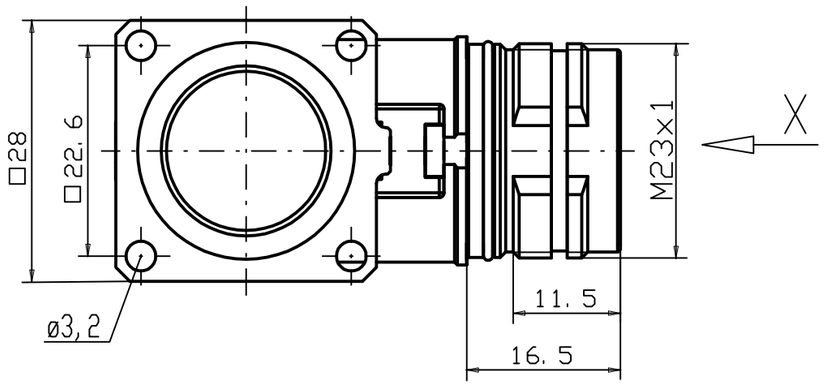

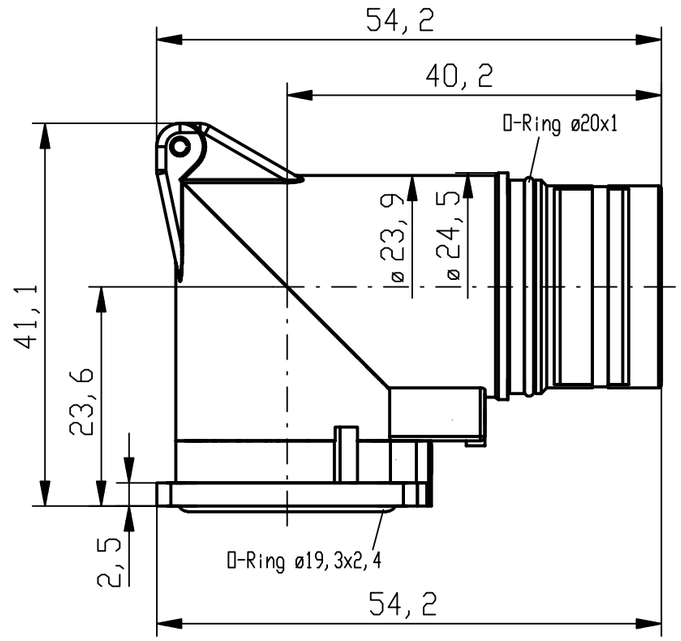

	Cable Diameter	Crimp Contacts	Without Contacts
6 Pole (5+PE)		KRP6G07-1052	KRP6G07-0052
		1202340013	1202340014
	Crimp range*	0,75-2,5mm²	
		KRP8G07-1152	KRP8G07-0052
8 Pole (4+3+PE)		1202340015	1202340016
	Crimp range*	0,25-1,0mm²/0,75-2,5mm²	

*Crimp range only applies to "Crimp Contacts" version

Notes:

Tolerances (unless specified): DIN ISO 2768 m

DESCRIPTION
EC NO: WEU2009-0135 2008/11/20
DRWN: BBRAUCH 2008/11/20
CH'KD: --- ---
APPR: JKOLB 2009/03/02
DESCRIPTION
1
REV

QUALITY SYMBOLS
▽ = 0
Ⓒ▽ = 0

GENERAL TOLERANCES (UNLESS SPECIFIED)

	mm	INCH
4 PLACES	±----	±----
3 PLACES	±----	±----
2 PLACES	±0.05	±----
1 PLACE	±0.1	±----
ANGULAR ± --- °		

DRAFT WHERE APPLICABLE MUST REMAIN WITHIN DIMENSIONS

DIMENSION STYLE: MM
SCALE: ---
DESIGN UNITS: METRIC
FIRST ANGLE PROJECTION

DRAWN BY: BB DATE: 2008/11/20
CHECKED BY: JKO DATE: 2008/12/09
APPROVED BY: ---- DATE: ----

M23 FRONT PM RECEPT.
MALE 90DEG FLANGE-MOUNT
4XDIA3.2MM ROTA.F28X28MM

MOLEX INCORPORATED

MATERIAL NO.: see table
DOCUMENT NO.: SD-120234-004
SHEET NO.: 1 OF 1
SIZE: A3

THIS DRAWING CONTAINS INFORMATION THAT IS PROPRIETARY TO MOLEX INCORPORATED AND SHOULD NOT BE USED WITHOUT WRITTEN PERMISSION