ITEM	DESCRIPTION	COLOR	34857-0506 12 CKT SEALED HEADER ASSY - KEY A QTY	34857-0606 12 CKT SEALED HEADER ASSY - KEY B QTY	34857-0706 12 CKT SEALED HEADER ASSY - KEY C QTY	34857-0806 12 CKT SEALED HEADER ASSY - KEY D QTY	34857-0516 12 CKT SEALED HEADER ASSY - KEY A (SHORT TAIL) QTY	34857-0616 12 CKT SEALED HEADER ASSY - KEY B (SHORT TAIL) QTY	34857-0716 12 CKT SEALED HEADER ASSY - KEY C (SHORT TAIL) QTY	34857-0816 12 CKT SEALED HEADER ASSY - KEY D (SHORT TAIL) QTY
1	12 CKT SEALED R/A HEADER HOUSING, KEY A	BLACK	1				1			
2	12 CKT SEALED R/A HEADER HOUSING, KEY B	GRAY		1				1		
3	12 CKT SEALED R/A HEADER HOUSING, KEY C	BROWN			1				1	
4	12 CKT SEALED R/A HEADER HOUSING, KEY D	GREEN				1				1
5	12 CKT R/A TERMINAL CORE	N/A	1	1	1	1				
6	12 CKT R/A TERMINAL CORE - SHORT TAIL	N/A					1	1	1	1

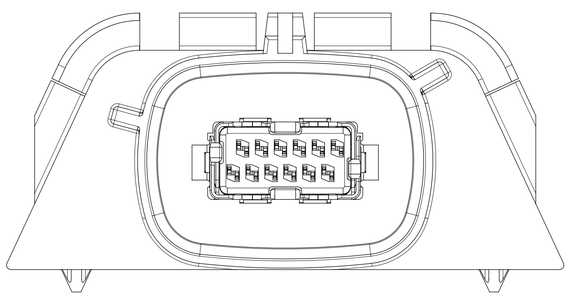

34857-05X6
KEY OPTION 'A'
COLOR: BLACK

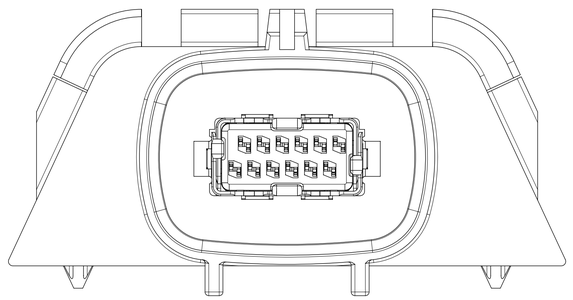

34857-06X6
KEY OPTION 'B'
COLOR: GRAY

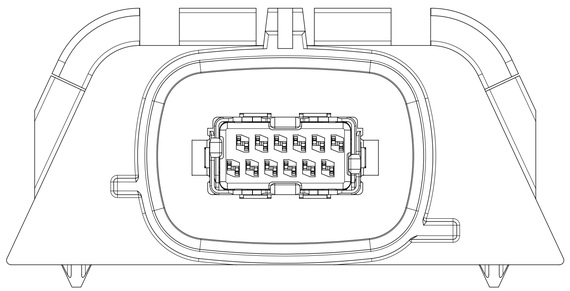

34857-07X6
KEY OPTION 'C'
COLOR: BROWN

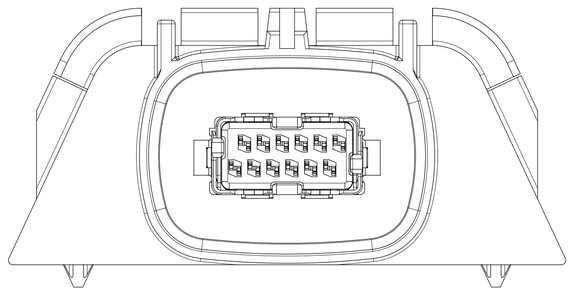

34857-08X6
KEY OPTION 'D'
COLOR: GREEN

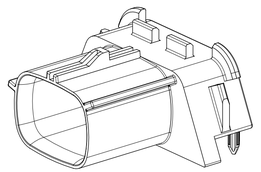

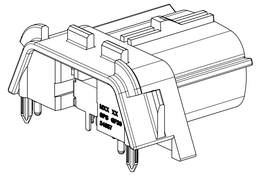

NOTES: VALID UNLESS OTHERWISE SPECIFIED

1. GENERAL:
a. APPLICATION SPECIFICATION: AS-111149-002
b. PRODUCT SPECIFICATION: PS-111149-001
c. PACKAGING SPECIFICATION PER MOLEX DRAWING: PK-31301-768
d. PARTS MUST BE IN COMPLIANCE TO THE CURRENT VERSION OF THE MOLEX CHEMICAL SUBSTANCES FOR PRODUCTS AND PACKAGING SPECIFICATION
e. DATA MUST BE SUBMITTED UNDER THE MOLEX PART NUMBER TO IMDS (COMPANY ID#13255)
f. PCB TO BE FR4 0.062" (1.57mm) THICK
g. MATING CONNECTOR MINIMUM CLEARANCE: AREA TO REMAIN CLEAR OF MODULE COMPONENTS, ADHESIVE, DEBRIS, ETC.
h. APPLICABLE SEALANT TO BE USED: LOCTITE 5910
i. PCB MOUNTING BOSSES DESIGNED TO BE USED WITH THE FOLLOWING:
#4-20 x .375" TRI-LOBULAR THREAD FORMING SCREW
RECOMMENDED ASSEMBLY TORQUE: 1.1Nm +/- 0.11Nm

2. DESIGN - MATERIALS:
a. HEADER HOUSING: SPS GF30
b. TERMINALS - COPPER ALLOY
OVERMOLDING - LCP GF30
MATE-SIDE PLATING: SELECTIVE GOLD OVER NICKEL
PCB SIDE PLATING: TIN OVER NICKEL
c. BISCUIT - SPS GF30
d. SHIELDS - COPPER ALLOY
PLATING - TIN OVER NICKEL

3. DESIGN - GEOMETRY:
a. ALL GRAPHIC DATA IS BASIC (NO TOLERANCE) AND MUST BE TAKEN FROM THE DATA FILE AT ITS LATEST REVISION.
b. N/A
c. GEOMETRIC DIMENSIONS AND TOLERANCES PER ASME Y14.5M-2009
d. EDGES AND UNDIMENSIONED DETAILS PER ISO13715
e. CORNERS SHOWN AS SHARP TO BE R 0.2 MAX.
f. MODULE MOUNTING SURFACE: SEALANT TO BE APPLIED TO THIS REGION ONLY. PARTING LINES PRESENT ON THIS SURFACE.

4. LASER MARKING TO BE MARKED WITH:
HUMAN READABLE CODE (HRC)
-PERMANENTLY APPLIED ON THE PART WITH 1.5mm LETTER SIZE
-INFORMATIION TO BE PRINTED
5 DIGIT JULIAN MANUFACTURING DATE STAMP YYDDD

REV	DESCRIPTION	ENGINEER	DATE
B4	UPDATED PCB LAYOUT - PIN HOLE DIA	SUDAYGUNAGI	23JULY2020

THIS DRAWING CONTAINS INFORMATION THAT IS PROPRIETARY TO MOLEX ELECTRONIC TECHNOLOGIES, LLC AND SHOULD NOT BE USED WITHOUT WRITTEN PERMISSION

DIMENSION UNITS	SCALE
mm	5:1

GENERAL TOLERANCES (UNLESS SPECIFIED)

ANGULAR TOL	± 1.0 °
4 PLACES	±
3 PLACES	±
2 PLACES	± 0.13
1 PLACE	± 0.25
0 PLACES	±

DRAFT WHERE APPLICABLE MUST REMAIN WITHIN DIMENSIONS

CURRENT REV DESC: UPDATED PCB LAYOUT - PIN HOLE DIA

EC NO: 697379
DRWN: DGILKEY 2020/05/15
CHK'D: SMAMIDINAGAV 2020/08/10
APPR: SMAMIDINAGAV 2022/03/15

INITIAL REVISION:
DRWN: CDILLON 2011/08/04
APPR: SMARCEAU 2011/08/08

THIRD ANGLE PROJECTION | DRAWING: D-SIZE | SERIES: 34857

molex

12 CKT HSAUTOLINK II
R/A SEALED HEADER ASM FLANGED

PRODUCT CUSTOMER DRAWING

DOCUMENT NUMBER	DOC TYPE	DOC PART	REVISION
SD-34857-001	PSD	000	B4

MATERIAL NUMBER	CUSTOMER	SHEET NUMBER
	GENERAL MARKET	1 OF 3

DOCUMENT STATUS	P1	RELEASE DATE	2022/03/15 18:36:41

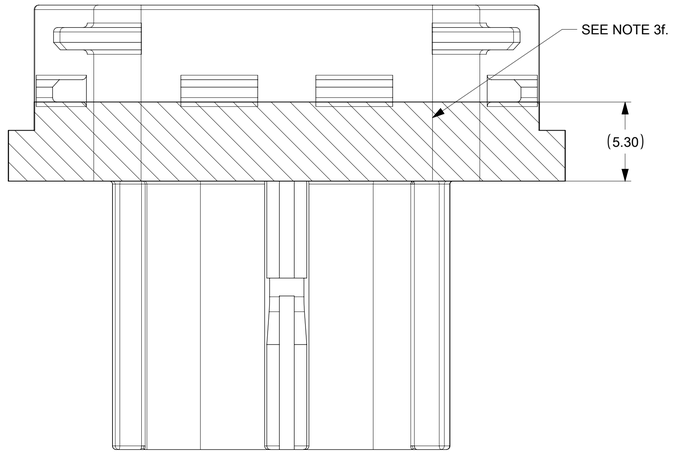

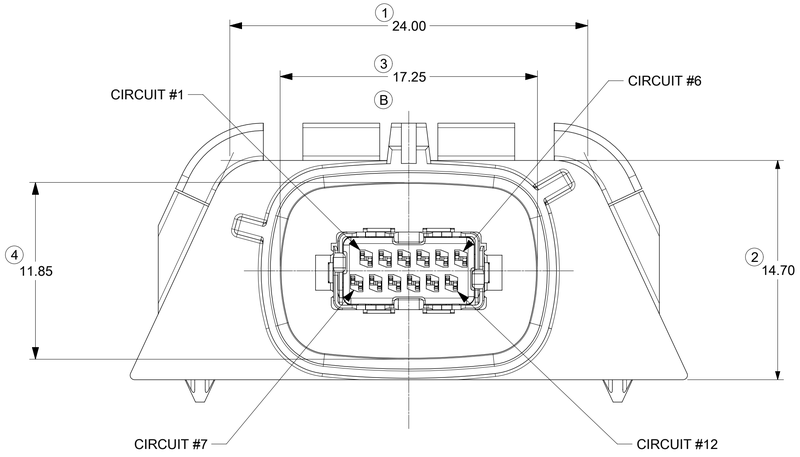

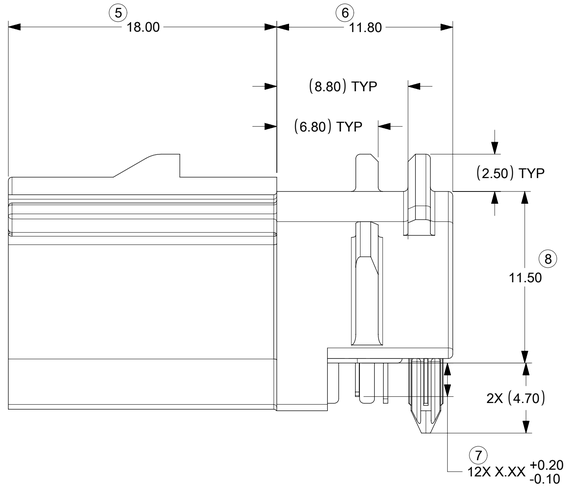

DIM 7	
PART NUMBER	VALUE
34857-0X06	2.25
34857-0X16	1.75

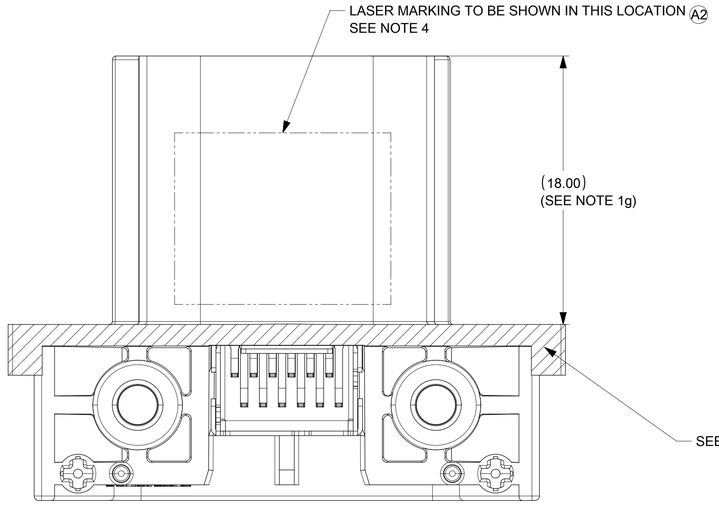

PCB CLEAROUT REGIONS

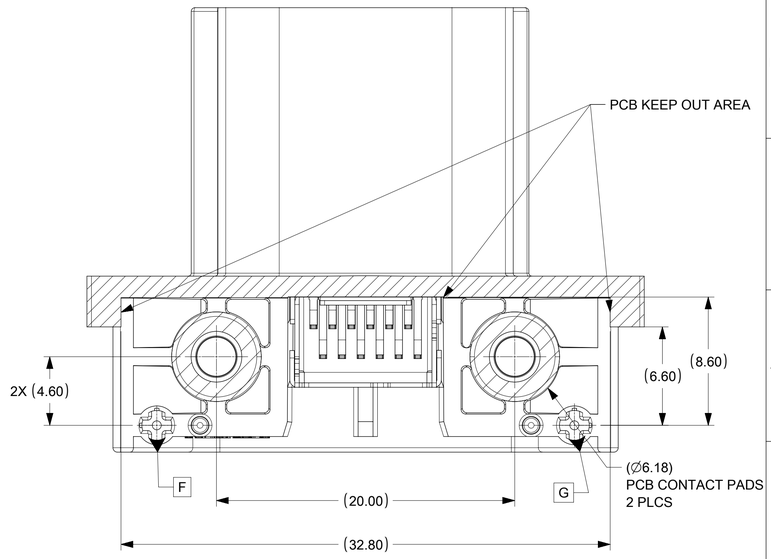

HEADER-TO-MODULE INTERFACE REQUIREMENTS

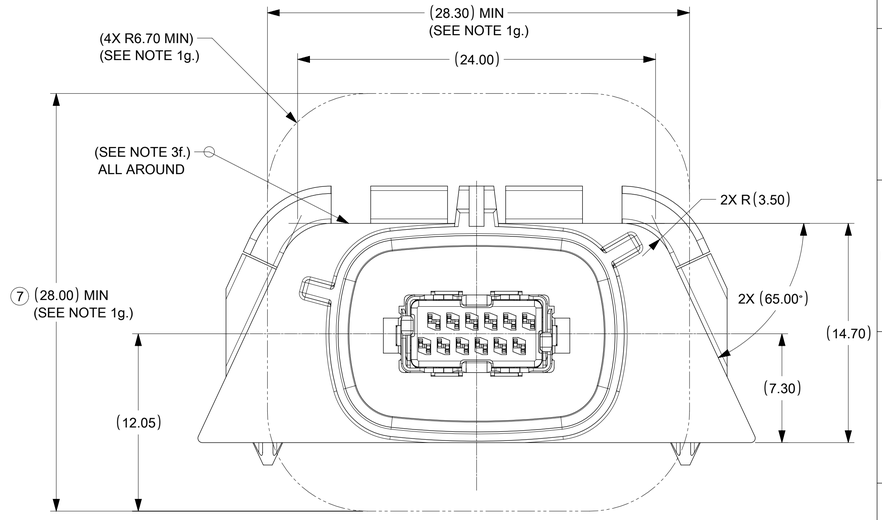

THIS DRAWING CONTAINS INFORMATION THAT IS PROPRIETARY TO MOLEX ELECTRONIC TECHNOLOGIES, LLC AND SHOULD NOT BE USED WITHOUT WRITTEN PERMISSION

DIMENSION UNITS	mm
SCALE	5:1
GENERAL TOLERANCES (UNLESS SPECIFIED)	
ANGULAR TOL	± 1.0 °
4 PLACES	±
3 PLACES	±
2 PLACES	± 0.13
1 PLACE	± 0.25
0 PLACES	±
DRAFT WHERE APPLICABLE MUST REMAIN WITHIN DIMENSIONS	

CURRENT REV DESC: UPDATED PCB LAYOUT - PIN HOLE DIA

EC NO: 697379

DRWN:	DGILKEY	2020/05/15
CHK'D:	SMAMIDINAGAV	2020/08/10
APPR:	SMAMIDINAGAV	2022/03/15

INITIAL REVISION:

DRWN:	CDILLON	2011/08/04
APPR:	SMARCEAU	2011/08/08

THIRD ANGLE PROJECTION | DRAWING: D-SIZE | SERIES: 34857

molex

12 CKT HSAUTOLINK II
R/A SEALED HEADER ASM FLANGED

PRODUCT CUSTOMER DRAWING

DOCUMENT NUMBER	DOC TYPE	DOC PART	REVISION
SD-34857-001	PSD	000	B4

MATERIAL NUMBER	CUSTOMER	SHEET NUMBER
	GENERAL MARKET	2 OF 3

DOCUMENT STATUS	P1	RELEASE DATE	2022/03/15 18:36:41

RECOMMENDED PCB LAYOUT - HEADER SIDE PCB

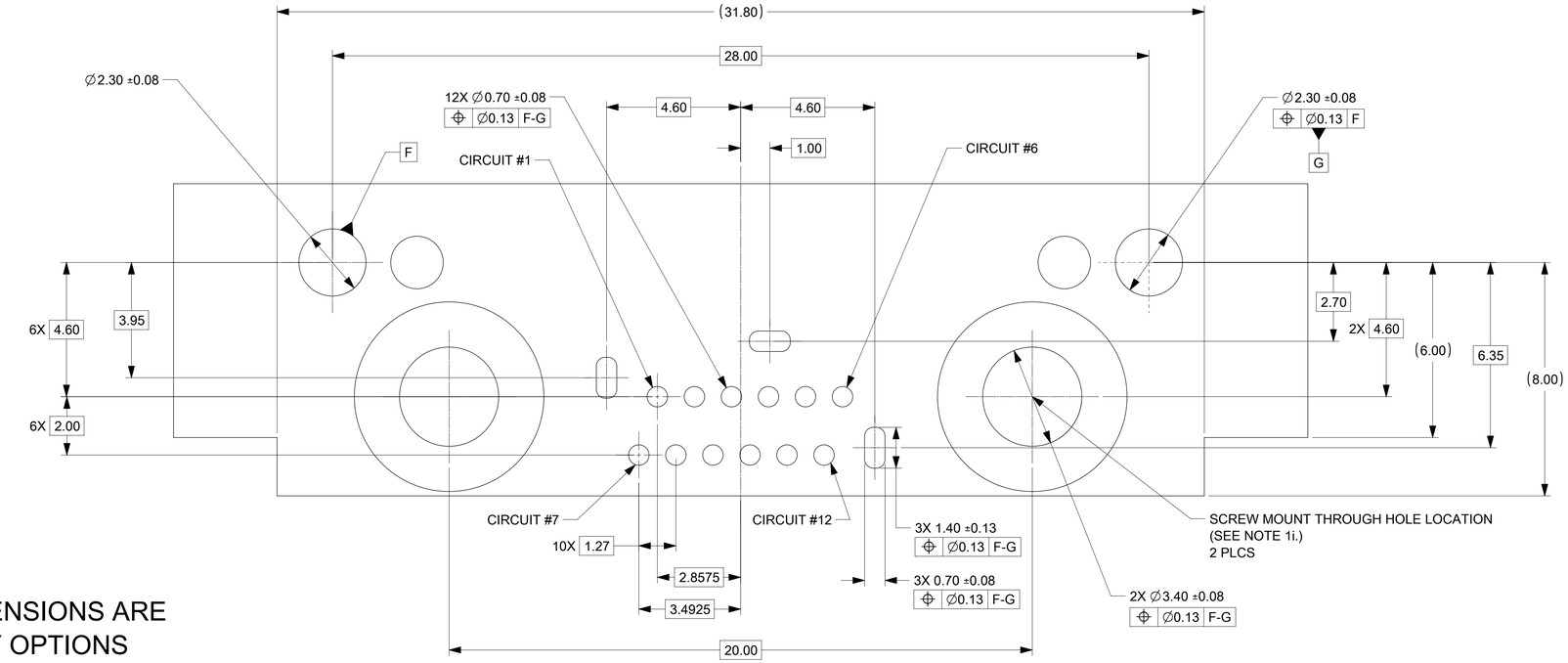

ALL THROUGH HOLE DIMENSIONS ARE
APPLICABLE FOR ALL KEY OPTIONS

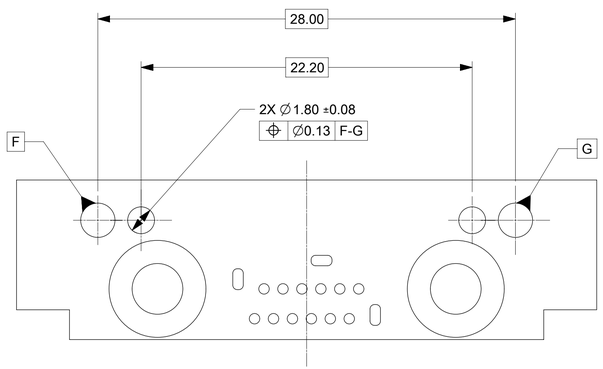

PCB KEY FEATURES
OPTION 'A'

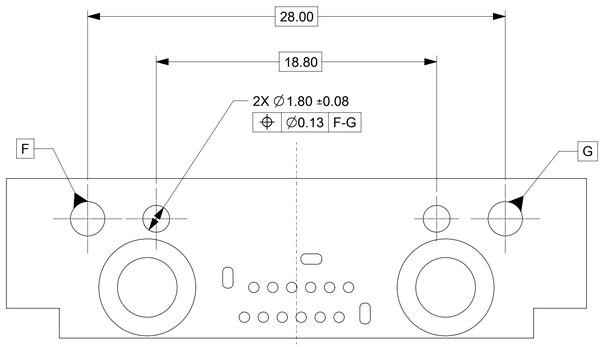

PCB KEY FEATURES
OPTION 'B'

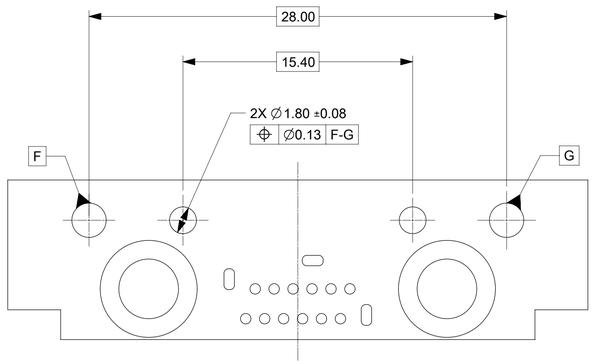

PCB KEY FEATURES
OPTION 'C'

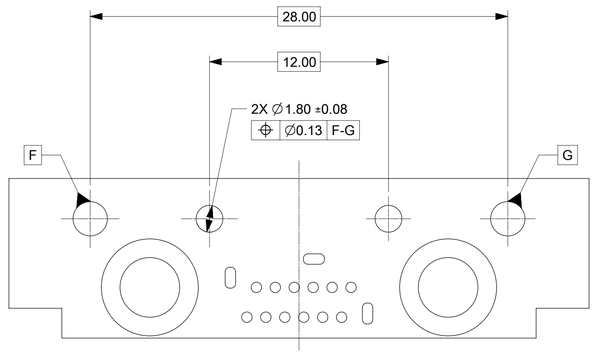

PCB KEY FEATURES
OPTION 'D'

THIS DRAWING CONTAINS INFORMATION THAT IS PROPRIETARY TO MOLEX ELECTRONIC TECHNOLOGIES, LLC AND SHOULD NOT BE USED WITHOUT WRITTEN PERMISSION

DIMENSION UNITS	SCALE
mm	10:1

GENERAL TOLERANCES (UNLESS SPECIFIED)

ANGULAR TOL	±	1.0 °
4 PLACES	±	
3 PLACES	±	
2 PLACES	±	0.13
1 PLACE	±	0.25
0 PLACES	±	

DRAFT WHERE APPLICABLE MUST REMAIN WITHIN DIMENSIONS

CURRENT REV DESC: UPDATED PCB LAYOUT - PIN HOLE DIA

EC NO: 697379

DRWN:	DGILKEY	2020/05/15
CHK'D:	SMAMIDINAGAV	2020/08/10
APPR:	SMAMIDINAGAV	2022/03/15

INITIAL REVISION:

DRWN:	CDILLON	2011/08/04
APPR:	SMARCEAU	2011/08/08

molex

12 CKT HSAUTOLINK II
R/A SEALED HEADER ASM FLANGED

PRODUCT CUSTOMER DRAWING

DOCUMENT NUMBER	DOC TYPE	DOC PART	REVISION
SD-34857-001	PSD	000	B4

THIRD ANGLE PROJECTION	DRAWING	SERIES	MATERIAL NUMBER	CUSTOMER	SHEET NUMBER
	D-SIZE	34857		GENERAL MARKET	3 OF 3

DOCUMENT STATUS	P1	RELEASE DATE	2022/03/15 18:36:41