PART NUMBER	ENGINEERING NO.	LENGTH
1300240163	DNB09A-M010	3' 3" +2.19 - 0 [1.0M +55.6 - 0]
1300240336	DNB09A-M030	9' 10" +3.50 - 0 [3.0M +88.9 - 0]
1300240165	DNB09A-M050	16' 5" +6.50 - 0 [5.0M +165.1 - 0]

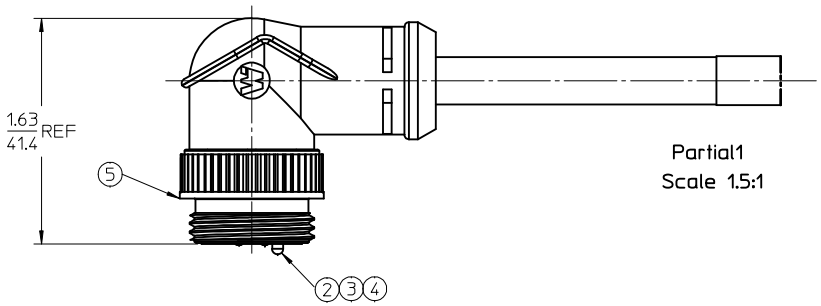

Partial1
Scale 1.5:1

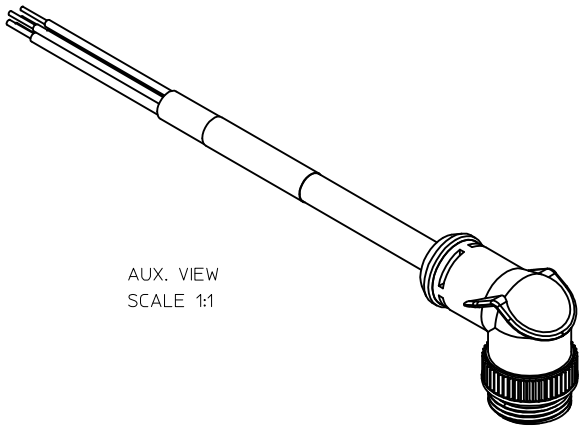

AUX. VIEW
SCALE 1:1

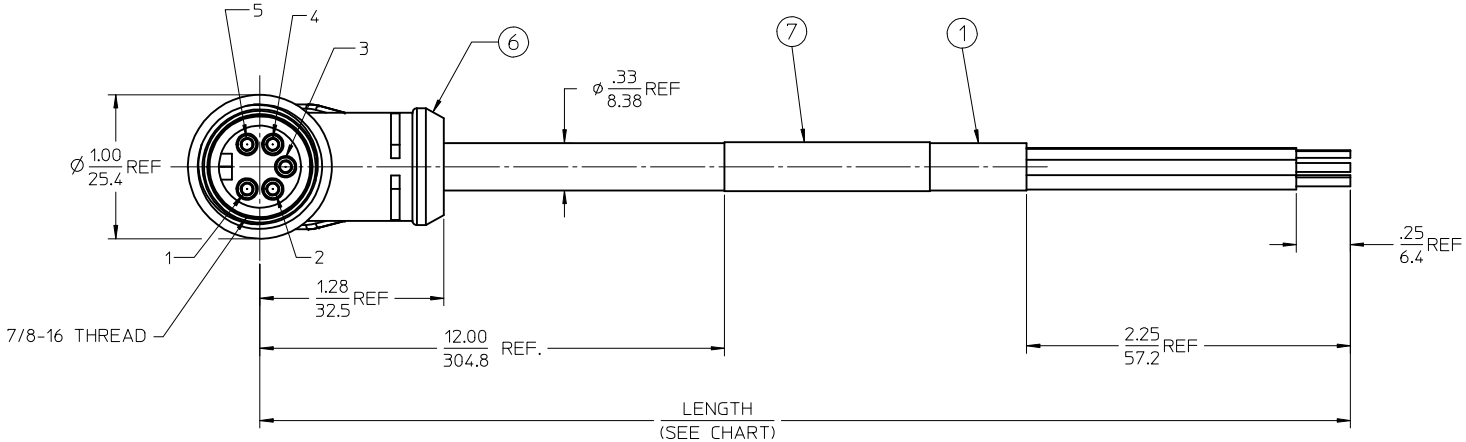

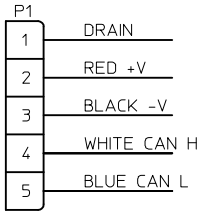

WIRING DIAGRAM

NOTES:
1. MATERIAL: SEE TABLE
2. FINISHES: SEE TABLE
3. CABLE ASSEMBLIES ARE BAGGED SEPERATELY IN POLY BAGS WITH BARCODE LABEL ATTACHED TO OUTSIDE OF BAG
4. WRAP LABEL IS MARKED WITH P/N, DATE CODE VOLTAGE & AMPERAGE
5. MATES WITH: MINI CHANGE, A-SIZE 5 POLE RECEPTACLE
6. ELECTRICAL SPECIFICATIONS:
   VOLTAGE RATING: 300V
   CURRENT RATING: 4 AMPS
7. ASSEMBLY IS RoHS COMPLIANT

ITEM	QTY.	DESCRIPTION	MATERIAL	FINISH
7	1	LABEL	PLASTIC FILM	BLACK/YELLOW
6	1	OVERMOLD	PVC	GRAY
5	1	COUPLING NUT	ZINC DIE CAST	BLACK
4	3	CONTACT PIN, 20 AWG	BRASS	GOLD PLATED
3	2	CONTACT PIN, 16 AWG	BRASS	GOLD PLATED
2	1	INSERT, MALE, 5 POLE	PVC	GRAY
1	1	CABLE, DEV-NET, TRUNK, 20/2, 16/2	PVC JACKET	GRAY

RELEASED
EC NO: WNA2010-0048 2009/07/17
DRWN:BRUPERT 2009/07/20
CHKD:WOODMAN
APPR: JFMURPHY
DESCRIPTION
A
REV

QUALITY SYMBOLS
▼=0
▽=0

GENERAL TOLERANCES (UNLESS SPECIFIED)

	mm	INCH
4 PLACES	± ---	± ---
3 PLACES	± ---	± ---
2 PLACES	± ---	± ---
1 PLACE	± ---	± ---

ANGULAR ±1/2°

DRAFT WHERE APPLICABLE MUST REMAIN WITHIN DIMENSIONS

DIMENSION STYLE: IN/MM
SCALE: 1.5:1
DESIGN UNITS: INCH
THIRD ANGLE PROJECTION

DRAWN BY	B.RUPERT	DATE 2009/07/08
CHECKED BY	B.WOODMAN	DATE 2009/07/08
APPROVED BY	J.MURPHY	DATE 2009/07/08

TITLE: MINI-CHANGE 5 POLE, MALE 90 DEG, DEV-NET CORD ASSEMBLY -MID

molex MOLEX INCORPORATED

MATERIAL NO.: SEE CHART
DOCUMENT NO.: SD-130024-008
SHEET NO.: 1 OF 1
SIZE: C

THIS DRAWING CONTAINS INFORMATION THAT IS PROPRIETARY TO MOLEX INCORPORATED AND SHOULD NOT BE USED WITHOUT WRITTEN PERMISSION