BC107,A,B
BC108B,C
BC109B,C

NPN SILICON TRANSISTOR



TO-18 CASE

www.centralsemi.com

DESCRIPTION:

The CENTRAL SEMICONDUCTOR BC107, BC108, BC109 series types are small signal NPN silicon transistors, manufactured by the epitaxial planar process, designed for general purpose amplifier applications.

MARKING: FULL PART NUMBER

MAXIMUM RATINGS: (T_A=25°C)	**SYMBOL**	**BC107**	**BC108**	**BC109**	**UNITS**
Collector-Base Voltage	V_{CBO}	50	30	30	V
Collector-Emitter Voltage	V_{CEO}	45	25	25	V
Emitter-Base Voltage	V_{EBO}	6.0	5.0	5.0	V
Continuous Collector Current	I_C		200		mA
Power Dissipation	P_D		600		mW
Operating and Storage Junction Temperature	T_J, T_{stg}		-65 to +200		°C
Thermal Resistance	Θ_{JC}		175		°C/W

ELECTRICAL CHARACTERISTICS: (T_A=25°C unless otherwise noted)

SYMBOL	**TEST CONDITIONS**	**MIN**	**TYP**	**MAX**	**UNITS**
I_{CBO}	V_{CB}=45V (BC107)			15	nA
I_{CBO}	V_{CB}=45V, T_A=125°C (BC107)			4.0	μA
I_{CBO}	V_{CB}=25V (BC108, BC109)			15	nA
I_{CBO}	V_{CB}=25V, T_A=125°C (BC108, BC109)			4.0	μA
BV_{CEO}	I_C=2.0mA (BC107)	45			V
BV_{CEO}	I_C=2.0mA (BC108, BC109)	25			V
BV_{EBO}	I_E=10μA (BC107)	6.0			V
BV_{EBO}	I_E=10μA (BC108, BC109)	5.0			V
$V_{CE(SAT)}$	I_C=10mA, I_B=0.5mA			0.25	V
$V_{CE(SAT)}$	I_C=100mA, I_B=5.0mA			0.6	V
$V_{BE(SAT)}$	I_C=10mA, I_B=0.5mA		0.7	0.83	V
$V_{BE(SAT)}$	I_C=100mA, I_B=5.0mA		1.0	1.05	V
$V_{BE(ON)}$	V_{CE}=5.0V, I_C=2.0mA	0.55		0.7	V
$V_{BE(ON)}$	V_{CE}=5.0V, I_C=10mA			0.77	V
h_{FE}	V_{CE}=5.0V, I_C=10μA (BC107B, BC108B, BC109B)	40			
h_{FE}	V_{CE}=5.0V, I_C=10μA (BC108C, BC109C)	100			
h_{FE}	V_{CE}=5.0V, I_C=2.0mA (BC107)	110		450	
h_{FE}	V_{CE}=5.0V, I_C=2.0mA (BC107A)	110		220	
h_{FE}	V_{CE}=5.0V, I_C=2.0mA (BC107B, BC108B, BC109B)	200		450	
h_{FE}	V_{CE}=5.0V, I_C=2.0mA (BC108C, BC109C)	420		800	

R1 (16-August 2012)

BC107,A,B
BC108B,C
BC109B,C

NPN SILICON TRANSISTOR

ELECTRICAL CHARACTERISTICS - Continued: (T_A=25°C unless otherwise noted)

SYMBOL	TEST CONDITIONS	MIN	TYP	MAX	UNITS
h_{fe}	V_{CE}=5.0V, I_C=2.0mA, f=1.0kHz (BC107)	125		500	
h_{fe}	V_{CE}=5.0V, I_C=2.0mA, f=1.0kHz (BC107A)	125		260	
h_{fe}	V_{CE}=5.0V, I_C=2.0mA, f=1.0kHz (BC107B, BC108B, BC109B)	240		500	
h_{fe}	V_{CE}=5.0V, I_C=2.0mA, f=1.0kHz (BC108C)		500		
h_{fe}	V_{CE}=5.0V, I_C=2.0mA, f=1.0kHz (BC109C)	450		900	
f_T	V_{CE}=5.0V, I_C=10mA, f=100MHz	150			MHz
C_{ob}	V_{CB}=10V, I_E=0, f=1.0MHz			4.5	pF
NF	V_{CE}=5.0V, I_C=0.2mA, R_g=2.0kΩ, B=200Hz, f=1.0kHz (BC107, BC108)			10	dB
NF	V_{CE}=5.0V, I_C=0.2mA, R_g=2.0kΩ, B=200Hz, f=1.0kHz (BC109)			4.0	dB

TO-18 CASE - MECHANICAL OUTLINE

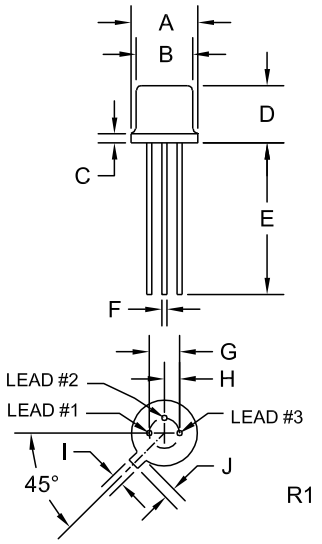

DIMENSIONS				
	INCHES		MILLIMETERS	
SYMBOL	MIN	MAX	MIN	MAX
A (DIA)	0.209	0.230	5.31	5.84
B (DIA)	0.178	0.195	4.52	4.95
C	-	0.030	-	0.76
D	0.170	0.210	4.32	5.33
E	0.500	-	12.70	-
F (DIA)	0.016	0.019	0.41	0.48
G (DIA)	0.100		2.54	
H	0.050		1.27	
I	0.036	0.046	0.91	1.17
J	0.028	0.048	0.71	1.22

TO-18 (REV: R1)

LEAD CODE:
1) Emitter
2) Base
3) Collector

MARKING:
FULL PART NUMBER

OUTSTANDING SUPPORT AND SUPERIOR SERVICES

PRODUCT SUPPORT

Central's operations team provides the highest level of support to insure product is delivered on-time.

- Supply management (Customer portals)
- Inventory bonding
- Consolidated shipping options
- Custom bar coding for shipments
- Custom product packing

DESIGNER SUPPORT/SERVICES

Central's applications engineering team is ready to discuss your design challenges. Just ask.

- Free quick ship samples (2nd day air)
- Online technical data and parametric search
- SPICE models
- Custom electrical curves
- Environmental regulation compliance
- Customer specific screening
- Up-screening capabilities
- Special wafer diffusions
- PbSn plating options
- Package details
- Application notes
- Application and design sample kits
- Custom product and package development

REQUESTING PRODUCT PLATING

1. If requesting Tin/Lead plated devices, add the suffix " TIN/LEAD" to the part number when ordering (example: 2N2222A TIN/LEAD).
2. If requesting Lead (Pb) Free plated devices, add the suffix " PBFREE" to the part number when ordering (example: 2N2222A PBFREE).

CONTACT US

Corporate Headquarters & Customer Support Team

Central Semiconductor Corp.
145 Adams Avenue
Hauppauge, NY 11788 USA
Main Tel: (631) 435-1110
Main Fax: (631) 435-1824
Support Team Fax: (631) 435-3388
www.centralsemi.com

Worldwide Field Representatives:
www.centralsemi.com/wwreps

Worldwide Distributors:
www.centralsemi.com/wwdistributors

For the latest version of Central Semiconductor's **LIMITATIONS AND DAMAGES DISCLAIMER**, which is part of Central's Standard Terms and Conditions of sale, visit: www.centralsemi.com/terms