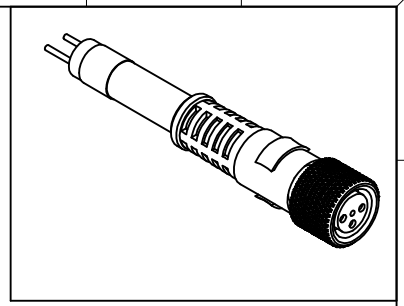

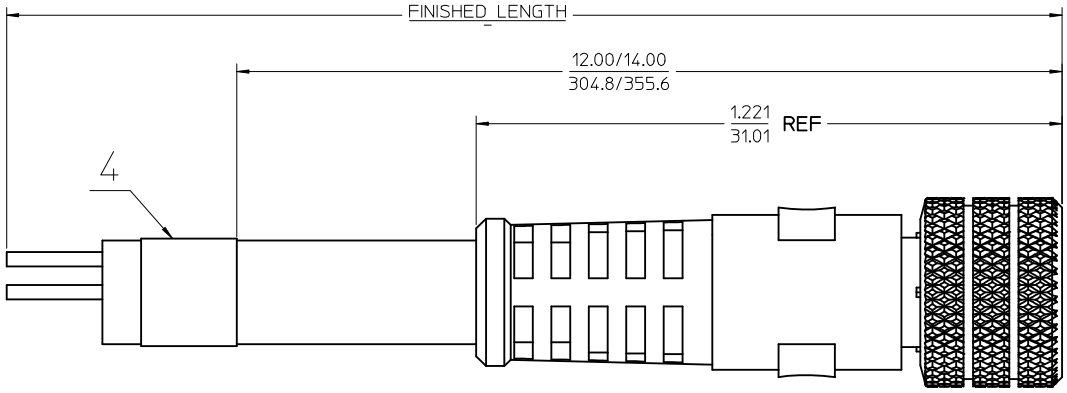

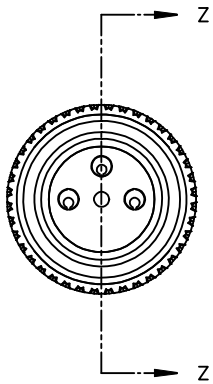

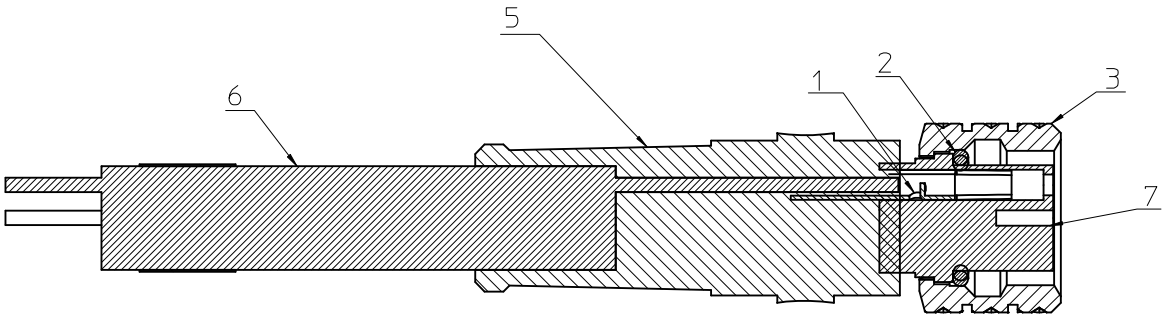

Section Z-Z

FEMALE INSERT FRONT VIEW		
3 POLE	4 POLE	5 POLE
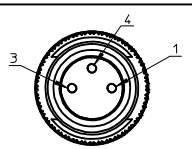	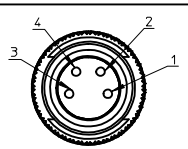	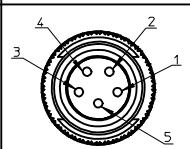
1 BROWN 3 BLUE 4 BLACK	1 BROWN 2 WHITE 3 BLUE 4 BLACK	1 BROWN 2 WHITE 3 BLUE 4 BLACK 5 GREY

ENTER DESCRIPTION
EC NO: WNA2009-0804 2009/06/30
DRWN:NKUMAR01
CHKD:
APPR: JFMURPHY 2009/07/08
DESCRIPTION
A
REV

QUALITY SYMBOLS
▼=0
▽C=0

GENERAL TOLERANCES (UNLESS SPECIFIED)	mm	INCH
4 PLACES	± ---	± ---
3 PLACES	± ---	± ---
2 PLACES	± ---	± ---
1 PLACE	± ---	± ---
ANGULAR ±1/2°		

DRAFT WHERE APPLICABLE MUST REMAIN WITHIN DIMENSIONS

DIMENSION STYLE	IN/MM
SCALE	5:1
DESIGN UNITS	INCH
	THIRD ANGLE PROJECTION
DRAWN BY	NKUMAR01
DATE	30/06/09
CHECKED BY	BWOODMAN
DATE	30/06/09
APPROVED BY	JFMURPHY
DATE	30/06/09
MATERIAL NO.	SEE SHEET 2
TITLE	NC 3P FP 2M COUPLER 24AWG PVC
	MOLEX INCORPORATED
DOCUMENT NO.	SD-120086-102
SHEET NO.	1 OF 2
SIZE	C

THIS DRAWING CONTAINS INFORMATION THAT IS PROPRIETARY TO MOLEX INCORPORATED AND SHOULD NOT BE USED WITHOUT WRITTEN PERMISSION

				ASSEMBLY		
				3 POLE	4 POLE	5 POLE
SL.No	DESCRIPTION	MATERIAL	FINISH	QTY		
1	CONTACT SOCKET	COPPER ALLOY	GOLD PLATED	3	4	5
2	O-RING	VITON	RED	1	1	1
3	COUPLING NUT	BRASS	NICKEL PLATED			
4	LABEL	PLASTIC FILM	BLACK/YELLOW			
5	OVER MOLD	TPE	YELLOW			
6	CABLE, 24 AWG, 3 CONDUCTOR	PVC JACKET	YELLOW	1		
	CABLE, 24 AWG, 4 CONDUCTOR	PVC JACKET	YELLOW		1	
	CABLE, 24 AWG, 5 CONDUCTOR	PVC JACKET	YELLOW			1
7	INSERT FEMALE 3 POLE	PUR	BLACK	1		
	INSERT FEMALE 4 POLE	PUR	BLACK		1	
	INSERT FEMALE 5 POLE	PUR	BLACK			1

PART NUMBER	DESCRIPTION	FINISHED LENGTH
1200860102	403000A10M020	2M +90MM -0 [6' 6" +3.5" -0]
1200860106	403000A10M040	4M +150MM -0 [13' 1" +6" -0]
1200860107	403000A10M050	5M +150MM -0 [16' 4" +6" -0]
1200860108	403000A10M060	6M +150MM -0 [19' 7" +6" -0]
1200860111	403000A10M100	10M +300MM -0 [32' 4" +12" -0]
1200860144	404000A10M020	2M +90MM -0 [6' 6" +3.5" -0]
1200860146	404000A10M040	4M +150MM -0 [13' 1" +6" -0]
1200860147	404000A10M050	5M +150MM -0 [16' 4" +6" -0]
1200860148	404000A10M060	6M +150MM -0 [19' 7" +6" -0]
1200860155	404000A10M100	10M +300MM -0 [32' 4" +12" -0]
1200860191	405000A10M020	2M +90MM -0 [6' 6" +3.5" -0]
1200860192	405000A10M040	4M +150MM -0 [13' 1" +6" -0]
1200860193	405000A10M050	5M +150MM -0 [16' 4" +6" -0]
1200860578	405000A10M060	6M +150MM -0 [19' 7" +6" -0]
1200860194	405000A10M100	10M +300MM -0 [32' 4" +12" -0]

ENTER DESCRIPTION
EC NO: WNA2009-0804 2009/07/08
DRWN:NKUMAR01 2009/06/30
CHKD:
APPR: JFMURPHY
DESCRIPTION
A
REV

QUALITY SYMBOLS
▼=0
▽C=0

GENERAL TOLERANCES (UNLESS SPECIFIED)

	mm	INCH
4 PLACES	± ---	± ---
3 PLACES	± ---	± ---
2 PLACES	± ---	± ---
1 PLACE	± ---	± ---

ANGULAR ±1/2°

DRAFT WHERE APPLICABLE MUST REMAIN WITHIN DIMENSIONS

DIMENSION STYLE: IN/MM
SCALE: 5:1
DESIGN UNITS: INCH
THIRD ANGLE PROJECTION

DRAWN BY: NKUMAR01 DATE: 30/06/09
CHECKED BY: BWOODMAN DATE: 30/06/09
APPROVED BY: JFMURPHY DATE: 30/06/09

TITLE: NC 3P FP 2M COUPLER 24AWG PVC

molex MOLEX INCORPORATED

MATERIAL NO.: SEE CHART
DOCUMENT NO.: SD-120086-102
SHEET NO.: 2 OF 2
SIZE: C

THIS DRAWING CONTAINS INFORMATION THAT IS PROPRIETARY TO MOLEX INCORPORATED AND SHOULD NOT BE USED WITHOUT WRITTEN PERMISSION

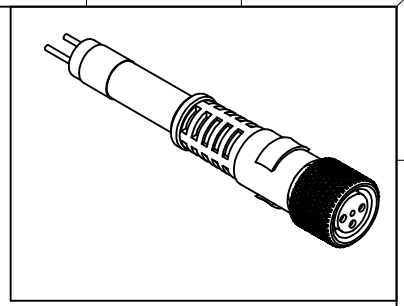

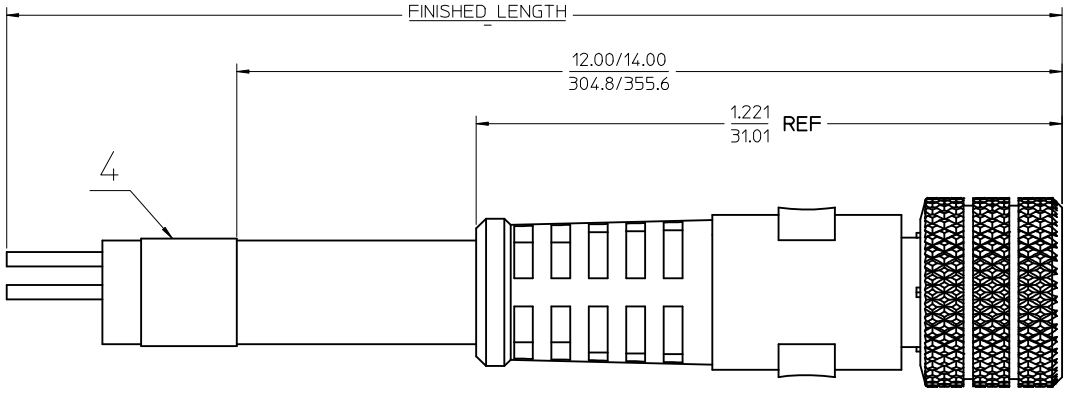

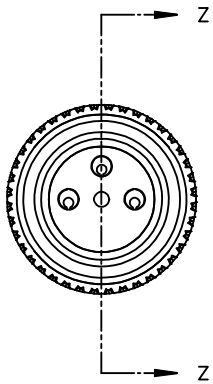

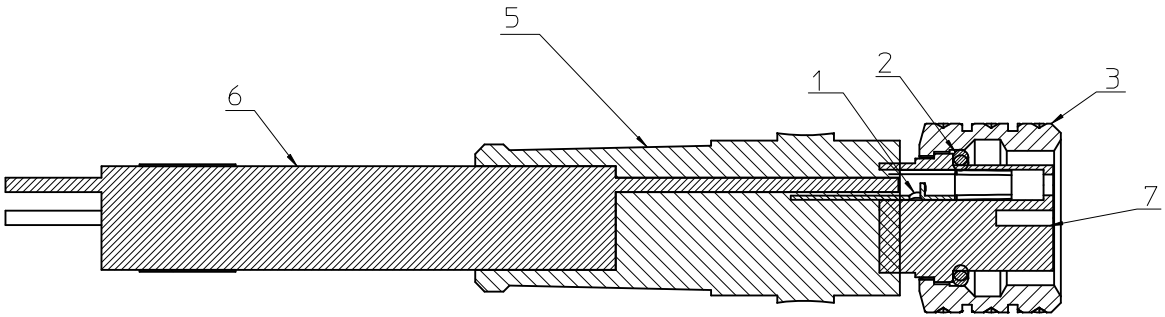

Section Z-Z

FEMALE INSERT FRONT VIEW		
3 POLE	4 POLE	5 POLE
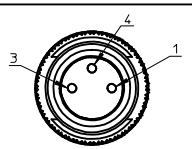	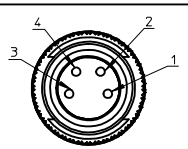	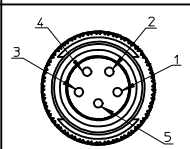
1 BROWN 3 BLUE 4 BLACK	1 BROWN 2 WHITE 3 BLUE 4 BLACK	1 BROWN 2 WHITE 3 BLUE 4 BLACK 5 GREY

ENTER DESCRIPTION
EC NO: WNA2009-0804 2009/06/30
DRWN:NKUMAR01
CHKD:
APPR: JFMURPHY 2009/07/08
DESCRIPTION
A
REV

QUALITY SYMBOLS
▼=0
▽C=0

GENERAL TOLERANCES (UNLESS SPECIFIED)	mm	INCH
4 PLACES	± ---	± ---
3 PLACES	± ---	± ---
2 PLACES	± ---	± ---
1 PLACE	± ---	± ---
ANGULAR ±1/2°		

DRAFT WHERE APPLICABLE MUST REMAIN WITHIN DIMENSIONS

DIMENSION STYLE	IN/MM
SCALE	5:1
DESIGN UNITS	INCH
	THIRD ANGLE PROJECTION
DRAWN BY	NKUMAR01
DATE	30/06/09
CHECKED BY	BWOODMAN
DATE	30/06/09
APPROVED BY	JFMURPHY
DATE	30/06/09
MATERIAL NO.	SEE SHEET 2
TITLE	NC 3P FP 2M COUPLER 24AWG PVC
	MOLEX INCORPORATED
DOCUMENT NO.	SD-120086-102
SHEET NO.	1 OF 2
SIZE	C

THIS DRAWING CONTAINS INFORMATION THAT IS PROPRIETARY TO MOLEX INCORPORATED AND SHOULD NOT BE USED WITHOUT WRITTEN PERMISSION

				ASSEMBLY		
				3 POLE	4 POLE	5 POLE
SL.No	DESCRIPTION	MATERIAL	FINISH	QTY		
1	CONTACT SOCKET	COPPER ALLOY	GOLD PLATED	3	4	5
2	O-RING	VITON	RED	1	1	1
3	COUPLING NUT	BRASS	NICKEL PLATED			
4	LABEL	PLASTIC FILM	BLACK/YELLOW			
5	OVER MOLD	TPE	YELLOW			
6	CABLE, 24 AWG, 3 CONDUCTOR	PVC JACKET	YELLOW	1		
	CABLE, 24 AWG, 4 CONDUCTOR	PVC JACKET	YELLOW		1	
	CABLE, 24 AWG, 5 CONDUCTOR	PVC JACKET	YELLOW			1
7	INSERT FEMALE 3 POLE	PUR	BLACK	1		
	INSERT FEMALE 4 POLE	PUR	BLACK		1	
	INSERT FEMALE 5 POLE	PUR	BLACK			1

PART NUMBER	DESCRIPTION	FINISHED LENGTH
1200860102	403000A10M020	2M +90MM -0 [6' 6" +3.5" -0]
1200860106	403000A10M040	4M +150MM -0 [13' 1" +6" -0]
1200860107	403000A10M050	5M +150MM -0 [16' 4" +6" -0]
1200860108	403000A10M060	6M +150MM -0 [19' 7" +6" -0]
1200860111	403000A10M100	10M +300MM -0 [32' 4" +12" -0]
1200860144	404000A10M020	2M +90MM -0 [6' 6" +3.5" -0]
1200860146	404000A10M040	4M +150MM -0 [13' 1" +6" -0]
1200860147	404000A10M050	5M +150MM -0 [16' 4" +6" -0]
1200860148	404000A10M060	6M +150MM -0 [19' 7" +6" -0]
1200860155	404000A10M100	10M +300MM -0 [32' 4" +12" -0]
1200860191	405000A10M020	2M +90MM -0 [6' 6" +3.5" -0]
1200860192	405000A10M040	4M +150MM -0 [13' 1" +6" -0]
1200860193	405000A10M050	5M +150MM -0 [16' 4" +6" -0]
1200860578	405000A10M060	6M +150MM -0 [19' 7" +6" -0]
1200860194	405000A10M100	10M +300MM -0 [32' 4" +12" -0]

ENTER DESCRIPTION
EC NO: WNA2009-0804 2009/07/08
DRWN:NKUMAR01 2009/06/30
CHKD:
APPR: JFMURPHY
DESCRIPTION
A
REV

QUALITY SYMBOLS
▼=0
▽C=0

GENERAL TOLERANCES (UNLESS SPECIFIED)

	mm	INCH
4 PLACES	± ---	± ---
3 PLACES	± ---	± ---
2 PLACES	± ---	± ---
1 PLACE	± ---	± ---

ANGULAR ±1/2°

DRAFT WHERE APPLICABLE MUST REMAIN WITHIN DIMENSIONS

DIMENSION STYLE: IN/MM
SCALE: 5:1
DESIGN UNITS: INCH
THIRD ANGLE PROJECTION

DRAWN BY: NKUMAR01 DATE: 30/06/09
CHECKED BY: BWOODMAN DATE: 30/06/09
APPROVED BY: JFMURPHY DATE: 30/06/09

TITLE: NC 3P FP 2M COUPLER 24AWG PVC

molex MOLEX INCORPORATED

MATERIAL NO.: SEE CHART
DOCUMENT NO.: SD-120086-102
SHEET NO.: 2 OF 2
SIZE: C

THIS DRAWING CONTAINS INFORMATION THAT IS PROPRIETARY TO MOLEX INCORPORATED AND SHOULD NOT BE USED WITHOUT WRITTEN PERMISSION