GT7 Series

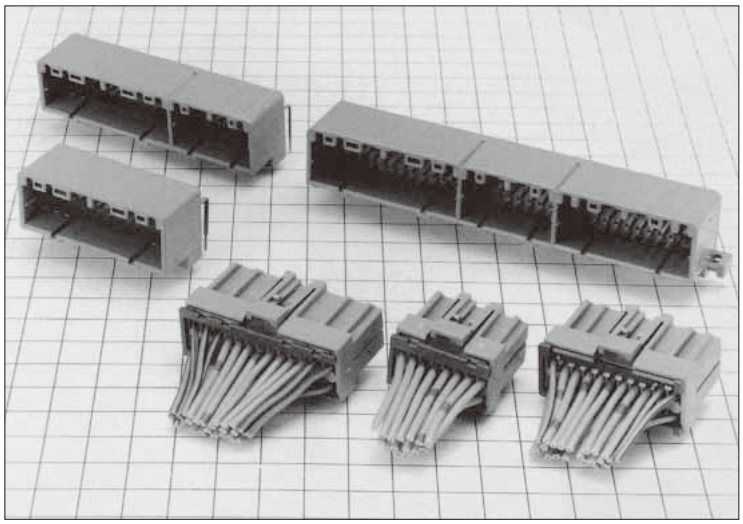

Features

- These automotive crimp terminals are equivalent to 040 and 070 tab width items.
- The contact point of the F connector side has been given a double structure to make these connectors compatible with low insertion force and high contact pressure at the time of coupling.

Sep.1.2022 Copyright 2022 HIROSE ELECTRIC CO., LTD. All Rights Reserved.

Sep.1.2022 Copyright 2022 HIROSE ELECTRIC CO., LTD. All Rights Reserved.

■ F Connectors

● Terminals



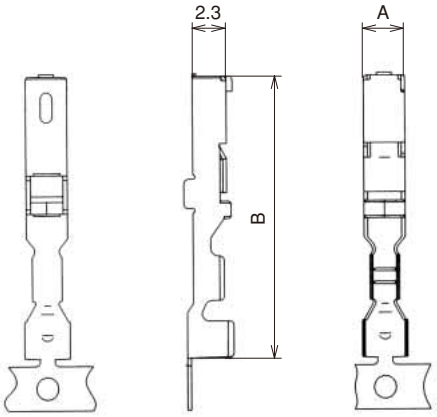

Part No.	HRS No.	Material	Plating	Conductor Size (AWG)	Outer Diameter	A Dimension	B Dimension	Packaging	RoHS
GT7-2022SCF(70)	757-0001-1 70	Copper palloy	Tin plating	20 to 22 AWG	ϕ1.4 to 2.4	2.8	19	5,000 pcs/reel	YES
GT7A-2022SCF(70)	757-0003-7 70				ϕ2.6 to 3.1			3,000 pcs/reel	
GT3-2024SCF(70)	753-0006-0 70			20 to 24 AWG	ϕ1.4 to 2.4	2.3	18.2	5,000 pcs/reel	

Note 1: Sold in reel.
Note 2: This component is used only with applicable HRS housings.

● Housing **16 Pos.**

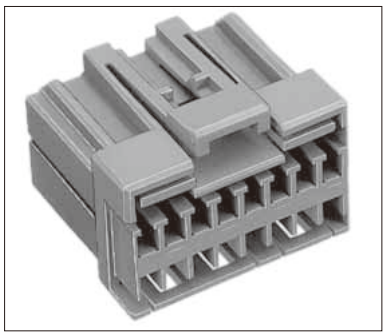

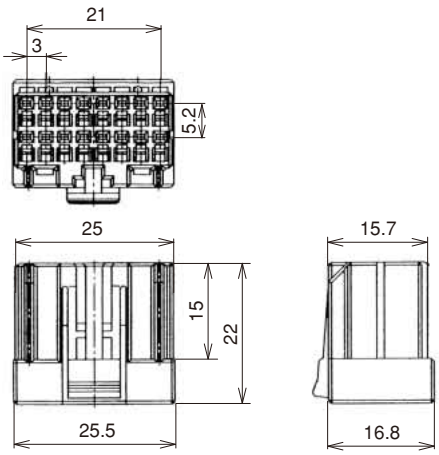

Part No.	HRS No.	Color	Material	Packaging	RoHS
GT7-16DS-HU	757-0008-0	Light Gray	PBT	1	YES

● Retainer (Only for GT7-16DS-HU)



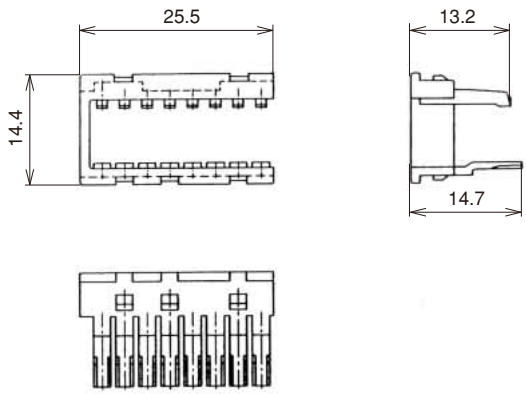

Part No.	HRS No.	Color	Material	Packaging	RoHS
GT7-16R	757-0010-2	Dark Gray	PBT	1	YES

● Housing 22 Pos.

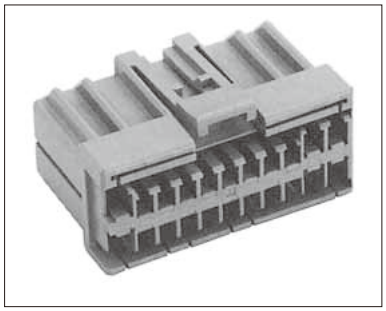

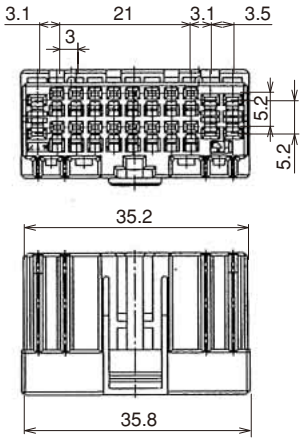

Part No.	HRS No.	Color	Material	Packaging	RoHS
GT7-22DS-HU	757-0015-6	Light Gray	PBT	1	YES

● Retainer (Only for GT7-22DS-HU)

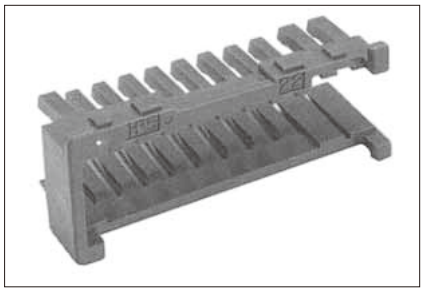

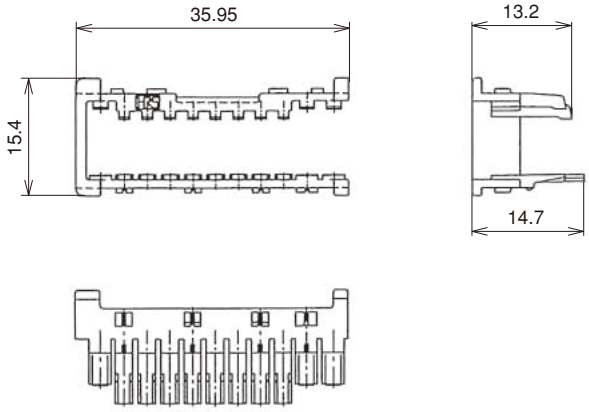

Part No.	HRS No.	Color	Material	Packaging	RoHS
GT7-22R	757-0016-9	Dark Gray	PBT	1	YES

● Housing 26 Pos.

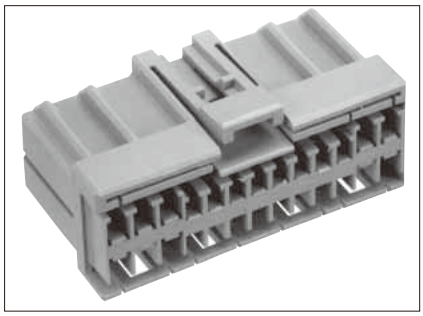

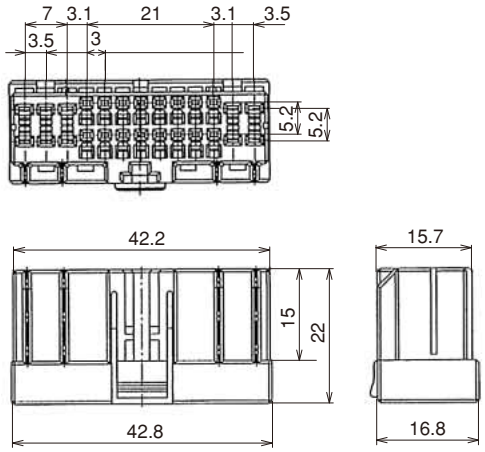

Part No.	HRS No.	Color	Material	Packaging	RoHS
GT7-26DS-HU	757-0009-3	Light Gray	PBT	1	YES

● Retainer (Only for GT7-26DS-HU)

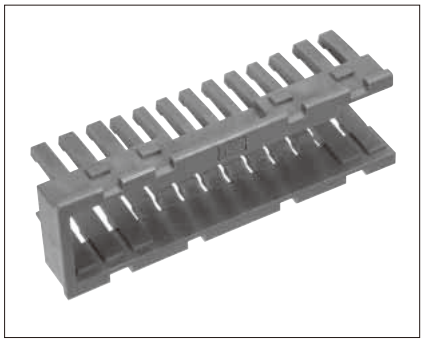

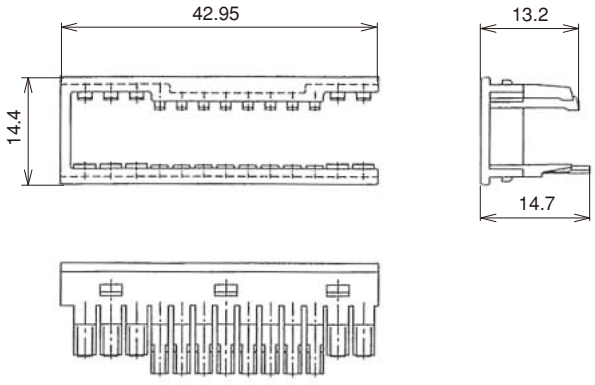

Part No.	HRS No.	Color	Material	Packaging	RoHS
GT7-26R	757-0011-5	Dark Gray	PBT	1	YES

Sep.1.2022 Copyright 2022 HIROSE ELECTRIC CO., LTD. All Rights Reserved.

Sep.1.2022 Copyright 2022 HIROSE ELECTRIC CO., LTD. All Rights Reserved.

■ M Connectors

● Board Type 26 Pos.

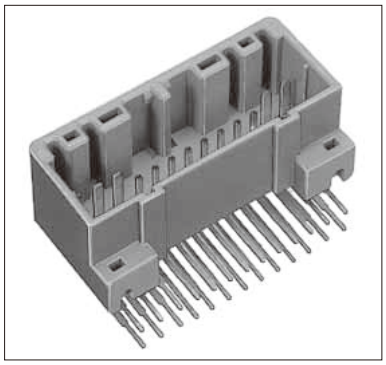

Mates with a 26-pos. F connector.

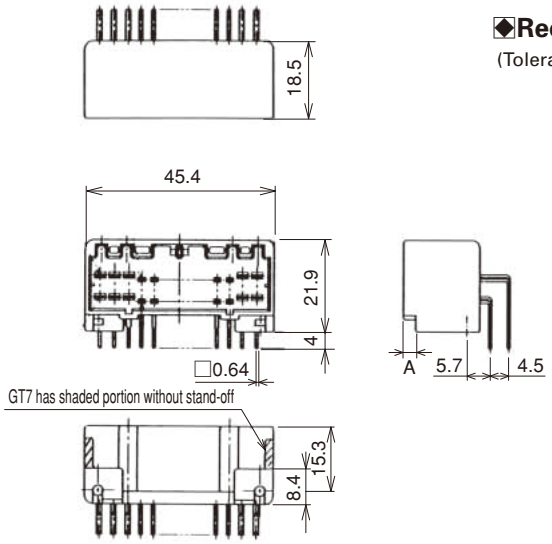

◆Recommended PCB pattern

(Tolerance of unmarked values is ±0.05.)

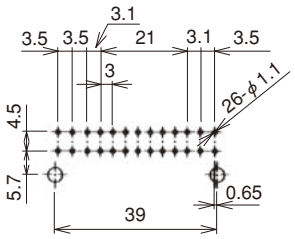

Part No.	HRS No.	Material/Plating or Color	A Dimension	Packaging	RoHS
GT7A-26DP-DS(70)	757-0014-3 70	Housing：PBT／Light Gray	3	1	YES
GT7-26DP-DS(70)	757-0006-5 70	Terminal：Brass／Tin plating	Shaded portion without stand-off		

● Board Type / Hybrid Type

42 Pos. (26pos.+16pos.)

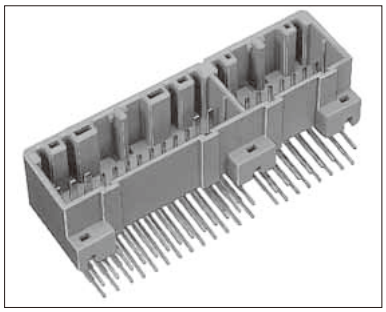

Mates with a 26-pos. + 16-pos. F connector.

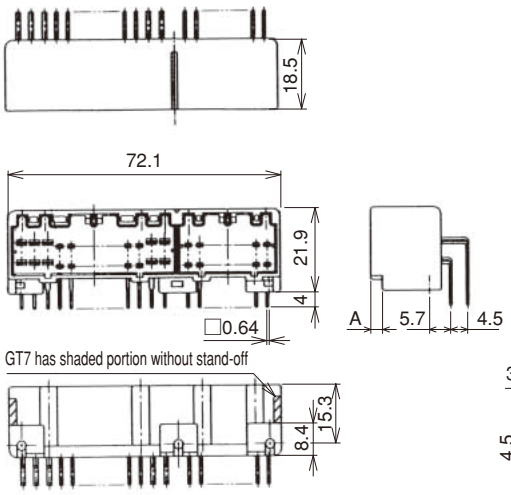

◆Recommended PCB pattern

(Tolerance of unmarked values is ±0.05.)

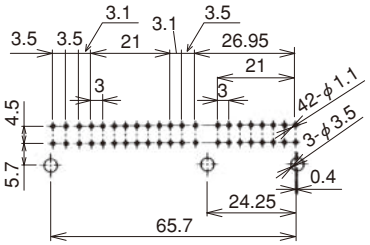

Part No.	HRS No.	Material/Plating or Color	A Dimension	Packaging	RoHS
GT7A-42DP-DS(70)	757-0013-0 70	Housing：PBT／Light Gray	3	1	YES
GT7-42DP-DS(70)	757-0007-8 70	Terminal：Brass／Tin plating	Shaded portion without stand-off		

● Board Type / Hybrid Type

64 Pos.



Mates with a 26-pos. + 16-pos. + 22-pos. F connector.

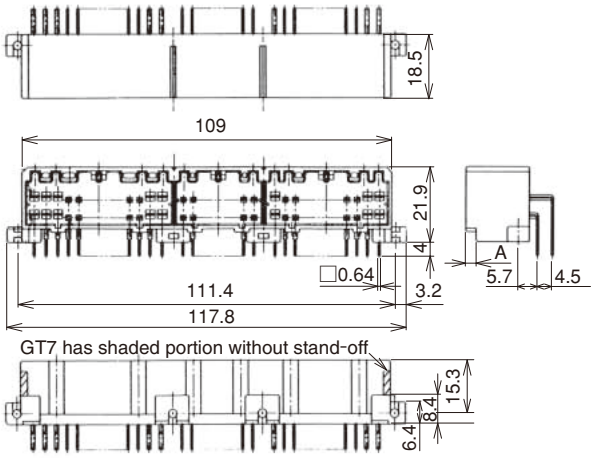

◆Recommended PCB pattern

(Tolerance of unmarked values is ±0.05.)

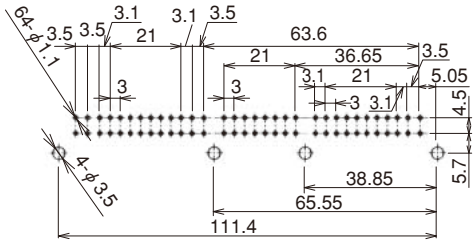

Part No.	HRS No.	A Dimension	Packaging	RoHS
GT7A-64DP-DS(70)	757-0012-8 70	3	1	YES
GT7-64DP-DS(70)	757-0005-2 70	Shaded portion without stand-off		

◆Crimping tools

User manuals are available. Please ask your Hirose Electric account representative.

Automatic Crimping Machine

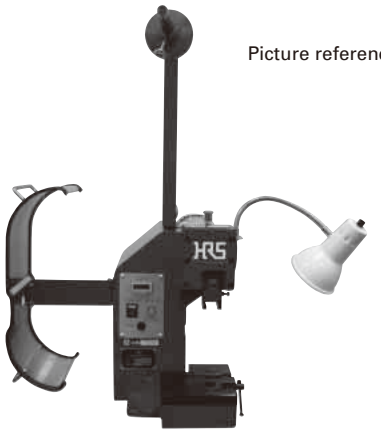

Picture reference only

Part No. CM-105C

Specifications

Item	Specification	Remarks
Press capacity	1.5ton	
Stroke Length	30mm	
Number of strokes	200spm(50 Hz)	240spm(60 Hz)
Weight	75 kg	
Motor	0.2kw	AC100V
Crimping speed	2,000 to 4,000 pcs/hour	

●Harness tool

Terminal Part No.	Terminal HRS No.	Tool Part No.	Tool HRS No.
GT7-2022SCF(70)	757-0001-1 70	AP 105-GT7-2022	901-5004-9
GT7A-2022SCF(70)	757-0003-7 70	AP 105-GT7A-2022	901-5039-3

*Crimp height setting tables are available for each cable type.
Please contact your nearest Hirose Electric account representative.
Different cables will require different crimp height settings.

Sep.1.2022 Copyright 2022 HIROSE ELECTRIC CO., LTD. All Rights Reserved.