AR16148CHSSL



Sample image

Order symbol: AR16148CHSSL

Product nbr: 8561064

Description: PC Enclosure

Remarks: Hinged opaque cover w/S.S. Lockable latch

EAN: 6418074067180

El. number:

- Finland:
- Denmark:
- Sweden:

Including: Hinged cover. Base with 10-32 brass inserts, latched cover with formed in place PUR gasket, stainless hinge pin. Quick release latches. Enclosure mounting foot kit. Accessory 10-32 screws for panel mounting.

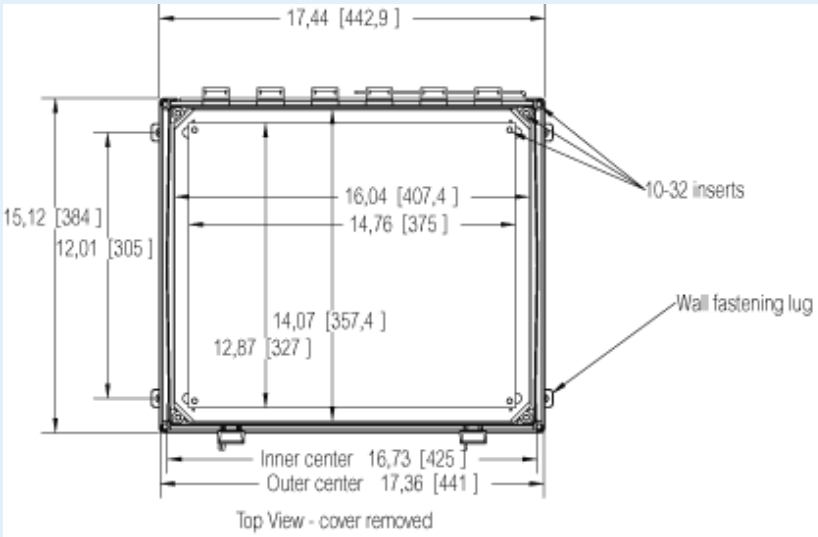

Top View - cover removed

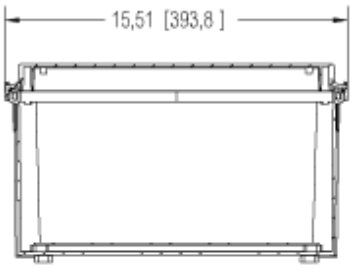

Screw cover

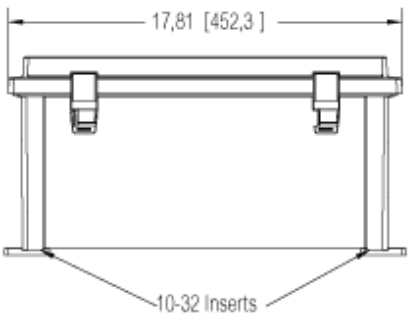

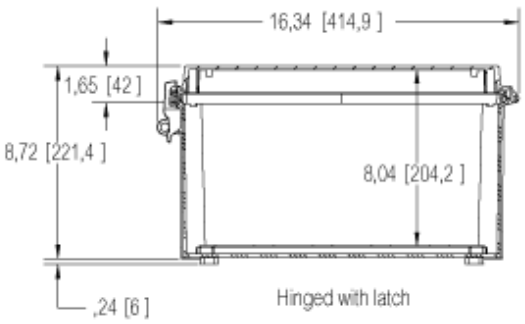

Hinged with latch

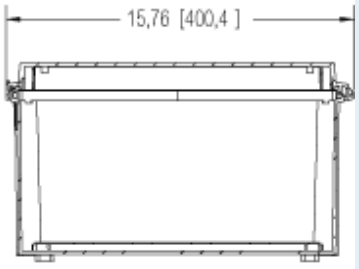

Hinged screw cover

Dimensions:	Height	Width	Depth
mm:	406	356	203

Accessories:	
ALBP1614	Aluminum Back Panel

inch:	16	14	8

Materials:

Material:	Polycarbonate
Base colour:	RAL 7035 -light grey
Cover colour:	RAL 7035 -light grey
Gasket material:	Polyurethane

Temperatures:

Temperature °C (short term)::	-40 … 140
Temperature °C (continuous):	-40 … 80
Temperature °F (short term):	-40 … 250
Temperature °F (continuous):	-40 … 175

	(375 x 327)
ASPHK16	Swing Panel Kit w/o Panel
ADFP1614	Dead Front Panel w/ screws (362 x 415 x 0)
APBP1614	PVC Back Panel (375 x 327)
ABP1614	Painted Steel Back Panel (375 x 327)
AMFL14	14" Mounting Flange Set
ASPK1614	Swing Panel Kit incl. Panel

Rating:

Ingress protection (EN 60529):	IP66; IP67;
Impact Resistance (EN 62262):	IK09;
Electrical insulation:	Not insulated
Halogen free (DIN/VDE 0472, Part 815):	1
UV resistance:	UL 508
Flammability Rating:	UL 508
Glow Wire Test (IEC 695-2-1) °C:	960 °C
NEMA Class	NEMA 4, 4X, 12 and 13

Certificates:

ARCA_CertificateofCompliance

© Fibox Oy, Data subject to change without notice (printed: 20.07.2022)