| PART NO. | ENGINEERING NO. | FINISHED LENGTH |
|---|---|---|
| 1300060422 | 103001A01F030 | 3FT [0.9M ] |
| 1300060433 | 103001A01F150 | 15FT [4.6M] |
| 1300060442 | 103001A01F300 | 30FT [9.1M] |

(C)

(C) PART NUMBER LEGEND

103001A01F030

CABLE LENGTH
F050 = 5 FEET
F100 = 10 FEET
F150 = 15 FEET

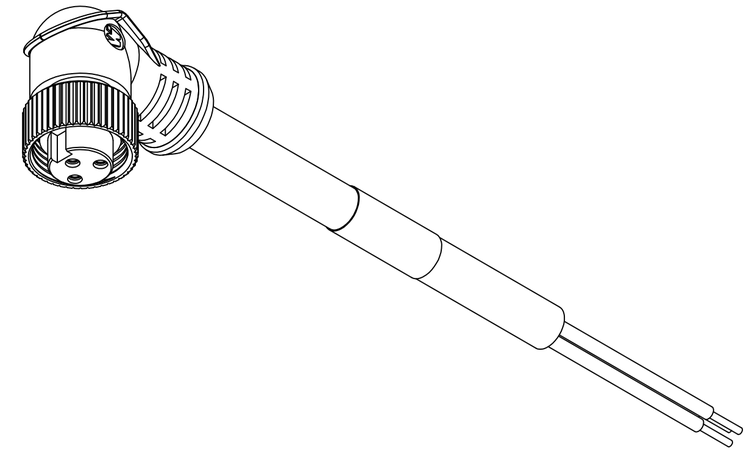

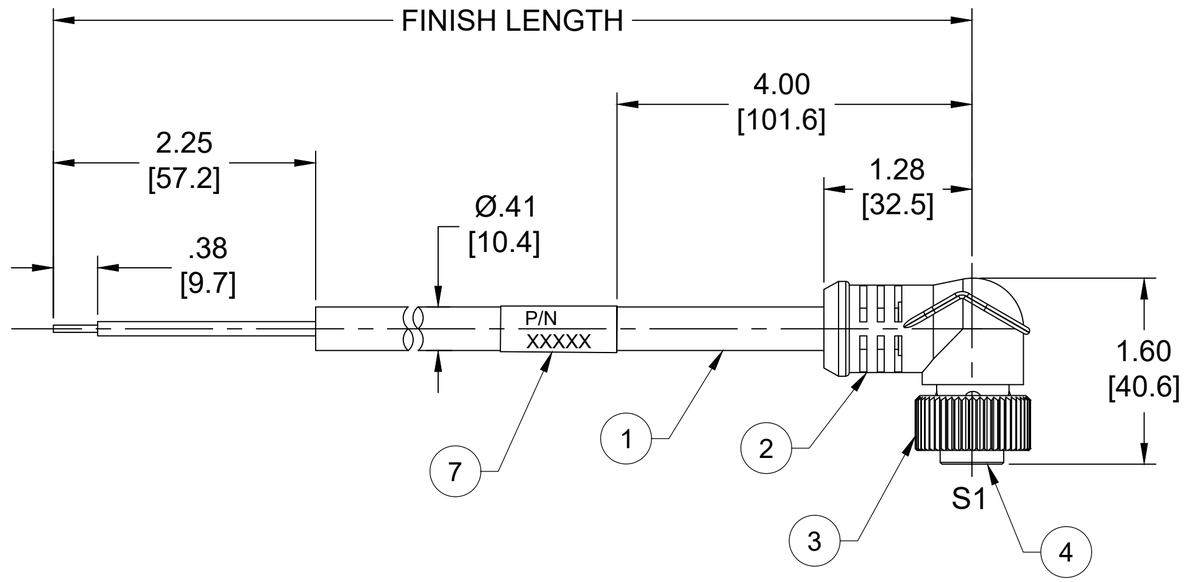


NOTES:
1. MATERIAL: AS NOTED
2. FINISH: AS NOTED
3. ELECTRICAL:
   VOLTAGE : 500V PER IEC 60664 (C)
   600V PER UL 2238
   CURRENT: 13A
4. TEMP RATING: -20° TO +105°C
5. PROTECTION: IP67 (WHEN MATED)
6. COUPLING THREAD: 7/8"-16UN
7. UL RECOGNIZED FILE: E152210
   CSA CERTIFIED FILE: LR6837
8. ALL DIMENSIONS ARE FOR REFERENCE UNLESS TOLERANCED OR NOTED OTHERWISE

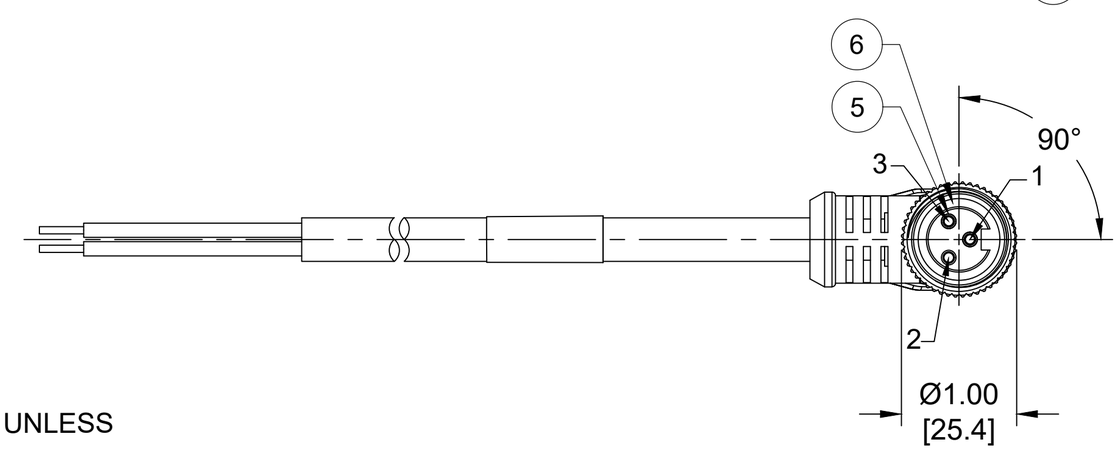


FEMALE FACE VIEW

S1

| | |
|---|---|
| GREEN/YELLOW-GND | 1 |
| BLACK | 2 |
| WHITE | 3 |

WIRING DIAGRAM

(C) CABLE LENGTH TOLERANCES
<.3M [1FT]: +19mm-0 [ +.75in-0]
.3 - .9M [1 - 3FT]: +44.5mm-0 [+1.75in-0]
.9 - 1.8M [3 - 6FT]: +55.6mm-0 [+2.19in-0]
1.8 - 3.7M [6 - 12FT: +88.9mm-0 [+3.50in-0]
3.7 - 7.3M [12 - 24FT]: +165.1mm-0 [+6.50in-0]
7.3-14.6M [24 - 48FT]: +317.5mm-0 [+12.50in-0]
14.6 - 30.5M [48-100FT]: +622.3mm-0 [+24.50in-0]
OVER 30M [100FT] +2% OF FINISHED LENGTH

| ITEM | COMPONENT | MATERIAL | FINISH | |
|---|---|---|---|---|
| 7 | WRAP LABEL | VINYL | BLACK/YELLOW | (C) |
| 6 | FRICTION RING | NYLON | WHITE | (C) |
| 5 | CONTACT SOCKET | COPPER ALLOY | GOLD OVER NICKEL | |
| 4 | INSERT | TPE | YELLOW | (C) |
| 3 | COUPLING NUT | ZINC DIE CAST | BLACK-E-COAT | |
| 2 | OVERMOLD | TPE | YELLOW | (C) |
| 1 | CABLE, 16 AWG STOOW/ST | PVC | YELLOW | |

THIS DRAWING CONTAINS INFORMATION THAT IS PROPRIETARY TO MOLEX ELECTRONIC TECHNOLOGIES, LLC AND SHOULD NOT BE USED WITHOUT WRITTEN PERMISSION

FUNCTIONAL SYMBOLS: FA=0, FC=0, FP=0
DIVISIONAL SYMBOLS

DIMENSION UNITS: INCH/MM
SCALE: NTS

GENERAL TOLERANCES (UNLESS SPECIFIED)

| | mm | INCH |
|---|---|---|
| 4 PLACES | ±---- | ±---- |
| 3 PLACES | ±---- | ±---- |
| 2 PLACES | ±---- | ±---- |
| 1 PLACE | ±---- | ±---- |
| 0 PLACES | ±---- | ±---- |
| ANGULAR TOL ± | ---- ° | |

DRAFT WHERE APPLICABLE MUST REMAIN WITHIN DIMENSIONS

CURRENT REV DESC: ITEM# 2 & 4 WERE PVC. ITEM #7 WAS PLASTIC FILM. ADDED FRICTION RING, IEC VOLTAGE, PN LEGEND & TOL CHART. MODIFIED PN CHART

EC NO: 702709
DRWN: ABENJAMINLW 2021/05/18
CHK'D: RSTONE 2022/04/11
APPR: BWOODMAN 2022/04/16

INITIAL REVISION:
DRWN: TWOLDEGE 2009/07/29
APPR: JFMURPHY 2009/08/10

THIRD ANGLE PROJECTION | DRAWING: C-SIZE | SERIES: 130006

molex

MINI-CHANGE CORDSET, A-SIZE
3-POLE, FEMALE, 90DEG, SINGLE KEY,
#16 AWG

PRODUCT CUSTOMER DRAWING

| DOCUMENT NUMBER | DOC TYPE | DOC PART | REVISION |
|---|---|---|---|
| SD-130006-015 | PSD | 001 | C |

| MATERIAL NUMBER | CUSTOMER | SHEET NUMBER |
|---|---|---|
| SEE CHART | GENERAL MARKET | 1 OF 1 |

| DOCUMENT STATUS | P1 | RELEASE DATE | 2022/04/16 16:04:51 |
|---|---|---|---|

FORMAT: IN-ACAD-tb-prod-C
REVISION: B
DATE: 2020/01/14