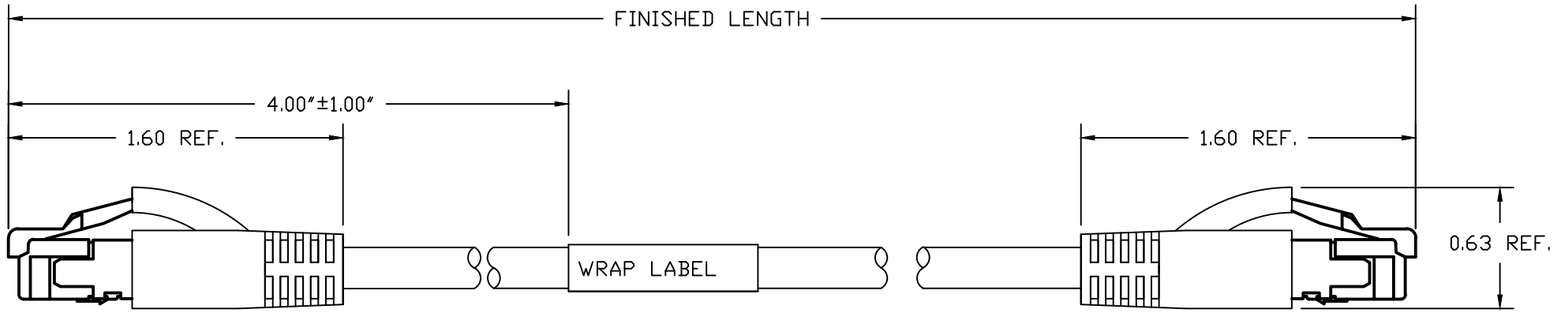

FRONT VIEW – MALE RJ45
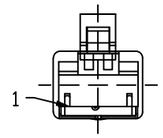
1-WHITE/ORANGE 2-ORANGE 3-WHITE/GREEN 6-GREEN

FRONT VIEW – MALE RJ45
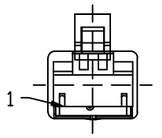
1-WHITE/ORANGE 2-ORANGE 3-WHITE/GREEN 6-GREEN

NOTES:

MECHANICAL
- RJ45
- PLUG: CLEAR POLYCARBONATE
- BOOT: BLACK PVC

CABLE: 26 AWG SHIELDED ETHERNET CABLE CAT-5E STRANDED TEAL TPE

WRAP LABEL: MARKED WITH P/N, DATE CODE, VOLTAGE & AMPERAGE

ELECTRICAL
- ACCORDING TO CAT5e
- VOLTAGE RATING: 30V AC/DC
- AMPERAGE: 1.5A

REV	DESCRIPTION
B	ADDED PART NO. TABLE EC NO: IPG2015-2010 DRWN: GGUSTAFS 2015/05/27 CH'KD: BARDEN 2015/07/23 APPR: BWOODMAN2015/04/03

QUALITY SYMBOLS
▼=0
Ⓒ=0

GENERAL TOLERANCES (UNLESS SPECIFIED)

	mm	INCH
4 PLACES	±---	±---
3 PLACES	±---	±.005
2 PLACES	±.13	±.010
1 PLACE	±.25	±.020
ANGULAR ±.5°		

DRAFT WHERE APPLICABLE MUST REMAIN WITHIN DIMENSIONS

DIMENSION STYLE: INCH ONLY
SCALE: NTS
DESIGN UNITS: INCH
THIRD ANGLE PROJECTION

DRAWN BY: GGUSTAFS DATE: 2015/03/24
CHECKED BY: BARDEN DATE: 2015/05/29
APPROVED BY: BWOODMAN DATE: 2015/04/03

TITLE: RJ45 TO RJ45 CORDSET
RJ45 ST / RJ45 ST
#26/4 TEAL TPE

MOLEX INCORPORATED

MATERIAL NO.: SEE TABLE
DOCUMENT NO.: SD-120108-079
SHEET NO.: 1 OF 2

SIZE: B

THIS DRAWING CONTAINS INFORMATION THAT IS PROPRIETARY TO MOLEX INCORPORATED AND SHOULD NOT BE USED WITHOUT WRITTEN PERMISSION

MATERAIL NO.	ENGINEERING NO.
1201080400	E66A06005M010
1201080314	E66A06005M020
1201080401	E66A06005M050
1201080402	E66A06005M100
1201080315	E66A06005M150
1201080403	E66A06005M200
1201080316	E66A06005M300
1201080320	E66A06005M500
1201080319	E66A06005M900

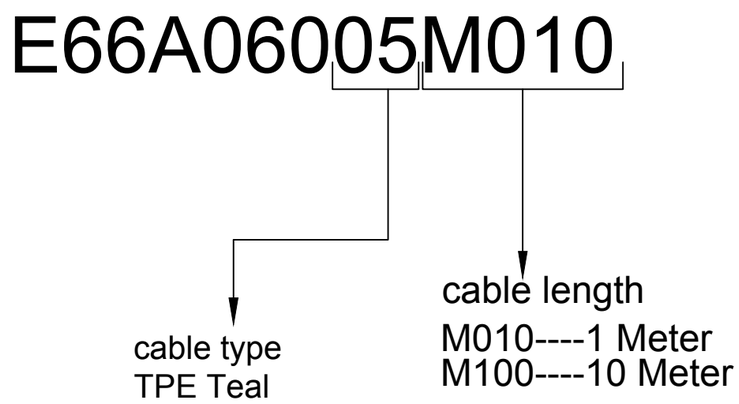

ADDED PART NO. TABLE
EC NO: IPG2015-2010
DRWN: GGUSTAFS 2015/05/27
CH'KD: BARDEN 2015/07/23
APPR: BWOODMAN 2015/04/03
DESCRIPTION
B
REV

QUALITY SYMBOLS
▼=0
Ⓒ=0

GENERAL TOLERANCES (UNLESS SPECIFIED)

	mm	INCH
4 PLACES	±---	±---
3 PLACES	±---	±.005
2 PLACES	±.13	±.010
1 PLACE	±.25	±.020
ANGULAR ±.5°		

DRAFT WHERE APPLICABLE MUST REMAIN WITHIN DIMENSIONS

DIMENSION STYLE: INCH ONLY
SCALE: NTS
DESIGN UNITS: INCH
THIRD ANGLE PROJECTION

DRAWN BY: GGUSTAFS DATE: 2015/03/24
CHECKED BY: BARDEN DATE: 2015/05/29
APPROVED BY: BWOODMAN DATE: 2015/04/03

TITLE
RJ45 TO RJ45 CORDSET
RJ45 ST / RJ45 ST
#26/4 TEAL TPE

MOLEX INCORPORATED

MATERIAL NO.: SEE TABLE
DOCUMENT NO.: SD-120108-079
SHEET NO.: 2 OF 2

SIZE: B

THIS DRAWING CONTAINS INFORMATION THAT IS PROPRIETARY TO MOLEX INCORPORATED AND SHOULD NOT BE USED WITHOUT WRITTEN PERMISSION