Rev	AWO #	Description	Date	Appr
-		RELEASED	8/06/10	

APPROVED: _____

DATE: _____ TITLE: _____

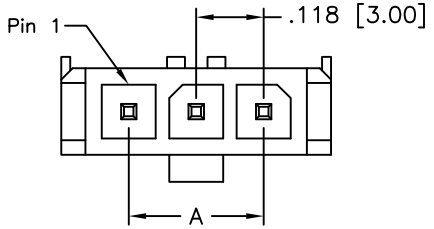

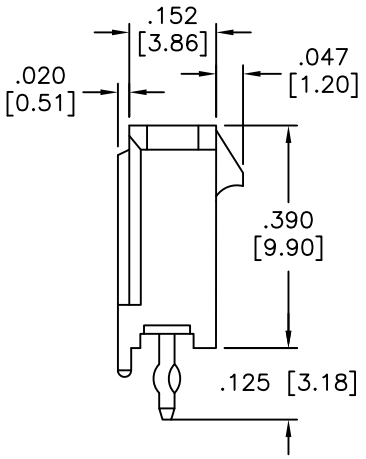

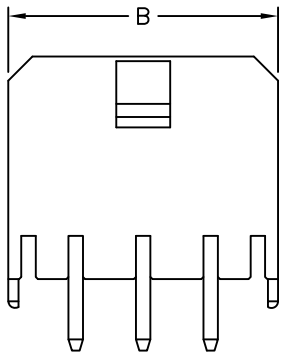

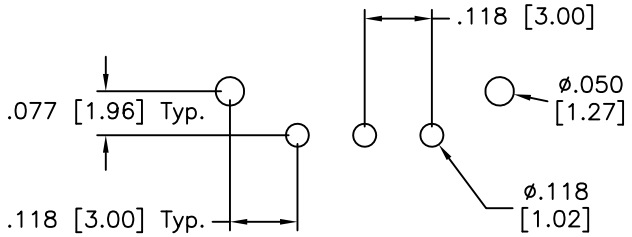

RECOMMENDED PCB LAYOUT

POSITIONS	Dimension	
	A	B
2	.118 [3.00]	.380 [9.65]
3	.236 [6.00]	.498 [12.65]
4	.354 [9.00]	.616 [15.65]
5	.472 [12.00]	.734 [18.65]
6	.591 [15.00]	.852 [21.65]
7	.709 [18.00]	.970 [24.65]
8	.827 [21.00]	1.088 [27.65]
9	.945 [24.00]	1.206 [30.65]
10	1.063 [27.00]	1.325 [33.65]
11	1.181 [30.00]	1.443 [36.65]
12	1.299 [33.00]	1.561 [39.65]

SPECIFICATIONS:
Material:
Insulator: Thermoplastic, rated UL 94V–0
Insulator color: Black
Contact: Brass, Tin plated
Electrical:
Operating voltage: 250 VAC
Current rating: 20 Awg: 5 Amps max
22 Awg: 5 Amps max
24 Awg: 4 Amps max
26 Awg: 3 Amps max
28 Awg: 2 Amps max
30 Awg: 1 Amp max.
Contact resistacne: 10 mohms max.
Dielectric strength: 1500 VAC for 1 minute
Temperature rise: 30°C max.
Mechanical:
Wire size: 20 Awg thru 30 Awg
Environmental:
Lead free, RoHS compliant.

RoHS COMPLIANT

UNLESS OTHERWISE SPECIFIED
ALL DIMENSIONS ARE INCHES [MM]
TOLERANCES: EXCEPT AS NOTED

INCHES		HOLES	
.X	± .10	Ø.X	±.10
.XX	± .020	Ø.XX	±.015
.XXX	± .015	Ø.XXX	±.010

APPROVALS		DATE
DRAWN	DY	8/06/10
CHECKED		
APPROVED		

ADAM TECH
909 Rahway Avenue, Union, NJ 07083
Phone: 908-687-5000 Fax: 908-687-5710

TITLE: .118 [3.00] SINGLE ROW HEADER VERTICAL, PCB TYPE

SIZE	PART NO.	REV.
X	DML-1-XX-A-V-T-A	-

REF: S00123T | SCALE: NTS | SHEET 1 OF 1