GENERAL CHARACTERISTICS		STANDARD	
No. OF CONTACTS		IEC 947-5-2	12
RATED VOLTAGE		IEC 664	30V AC/DC
POLLUTION DEGREE		IEC 664	3
CURRENT CARRYING CAPACITY		IEC 512-3 TEST 5b	1.5A
CONTACT RESISTANCE		IEC 512-2 TEST 2 A	< 5 mOhm
RATED IMPULSE WITHSTAND VOLTAGE		IEC 664	0.8 kV
TEST VOLTAGE		IEC 60512-2 TEST 4 A	0.5kV/60 sec
INSULATION RESISTANCE		IEC 512-2 TEST 3 A	> 100 MOhm
IP DEGREE OF PROTECTION		IEC 529	IP 67
PIN DIAMETER			0.6 mm
TERMINATION			CRIMP
FLAMMABILITY	INSERTS	UL 94	V-0
	CABLES		VDE 0472/804
MECHANICAL OPERATION			100 MATING CYCLES
TEMPERATURE RANGE		IEC 60668-1	-25°C/+90°C

WIRING DIAGRAM

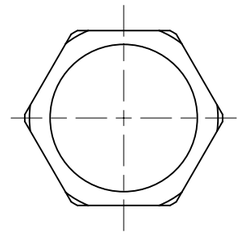

LOCK NUT M16x1.5
(NEEDS TO BE ORDER SEPARATE)

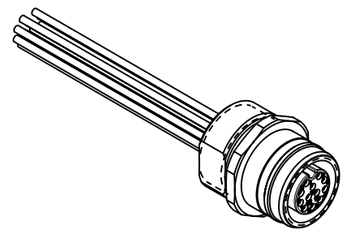

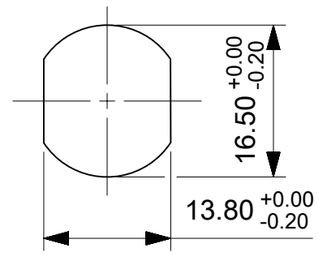

PANEL CUTOUT

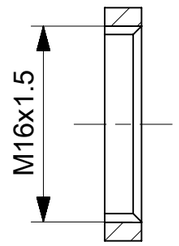

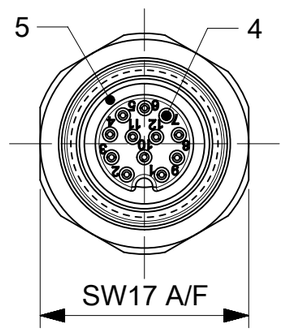

VIEW FROM FRONT SIDE

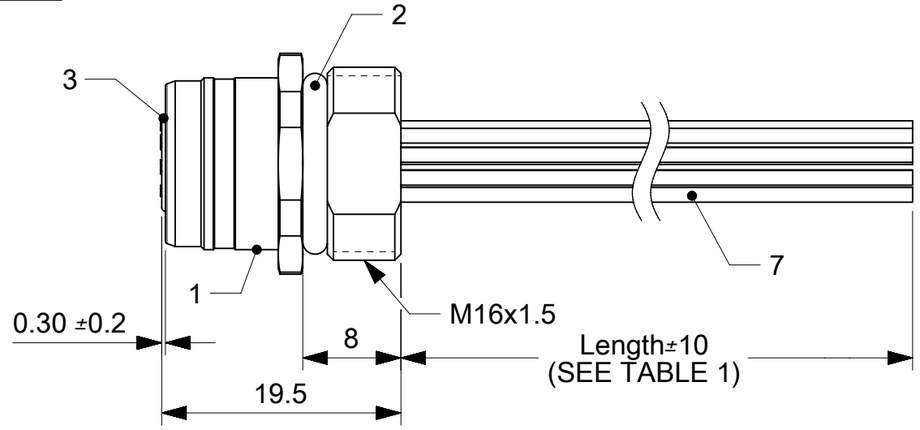

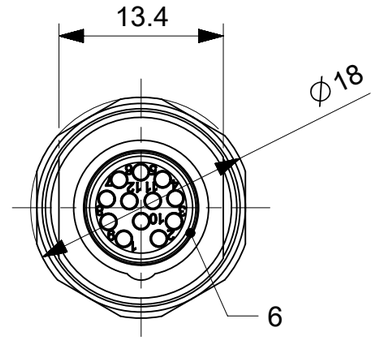

VIEW FROM WIRE SIDE

ITEM	QTY.	DESCRIPTION	MATERIAL	FINISH/COLOR
1	1	UL.M12(FE)XM16(M)FRONT PANEL	BRASS	Ni-PLATED
2	1	O-RING	NBR	BLACK
3	1	INSERT M12 FEMALE	PUR	BLACK
4	12	M12 FEMALE CONTACT	BRASS	Cu/Ni3bAuCo0.6
5	1	GASKET OR	FPM	RED
6	1	SHELL FEMALE SHIELD	BRASS	Ni-PLATED
7	12	WIRES	-	-
8	-	ADH PUR 2K HARD WEVONAT 300M BN V0	-	-
9	-	ADH PUR 2K WEVO CASTING RESIN PU552FL/10	-	-

TABLE 1

PART-NUMBER	ENGINEERING.NO	LENGTH
1200845012	WRCU20E01C200	200mm
1200845013	WRCU20E01C300	300mm

THIS DRAWING CONTAINS INFORMATION THAT IS PROPRIETARY TO MOLEX ELECTRONIC TECHNOLOGIES, LLC AND SHOULD NOT BE USED WITHOUT WRITTEN PERMISSION

SYMBOLS: = 0 (FE/A), = 0 (FE/C), = 0 (FE/P), = 0 (S), = 0 (▼), = 0 (FC), = 0 (☒), = 0 (■), = 0 (▽)

DIMENSION UNITS: mm
SCALE:
GENERAL TOLERANCES (UNLESS SPECIFIED)

	MM	INCH
4 PLACES	±	±
3 PLACES	±	±
2 PLACES	±	±
1 PLACE	±	±
0 PLACES	± 0.3	±
ANGULAR TOL	± 1.0 °	

DRAFT WHERE APPLICABLE MUST REMAIN WITHIN DIMENSIONS

CURRENT REV DESC:

EC NO: 178263
DRWN: SSM 2018/05/22
CHK'D: SSM 2018/06/20
APPR: RSILLER 2018/06/22

INITIAL REVISION:
DRWN: BBRAUCH 2012/01/23
APPR: REISSNER 2012/02/15

THIRD ANGLE PROJECTION | DRAWING: A3-SIZE | SERIES: 120084

molex

REC U12 12P AC FE 0.3M M16 FM WIR SE SHD

PRODUCT CUSTOMER DRAWING

DOCUMENT NUMBER	DOC TYPE	DOC PART	REVISION
1200845013	PSD	000	A

MATERIAL NUMBER	CUSTOMER	SHEET NUMBER
SEE TABLE 1	GENERAL MARKET	1 OF 1

DOCUMENT STATUS	P1	RELEASE DATE	2018/06/22 08:14:43

FORMAT: Metric-Tender-tb-prod-A3
REVISION: D
DATE: 2018/01/15

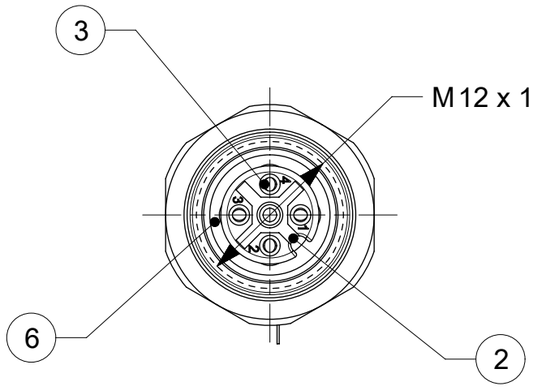

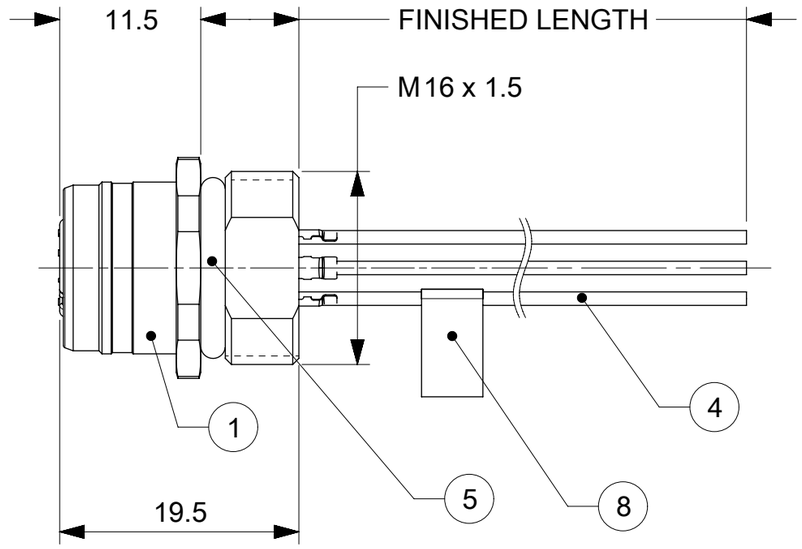

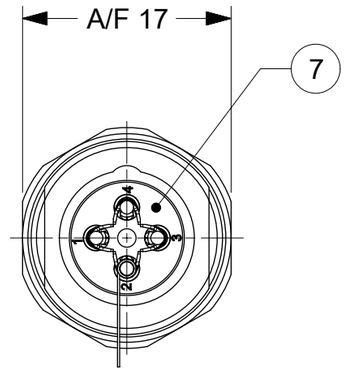

Panel Cutout:

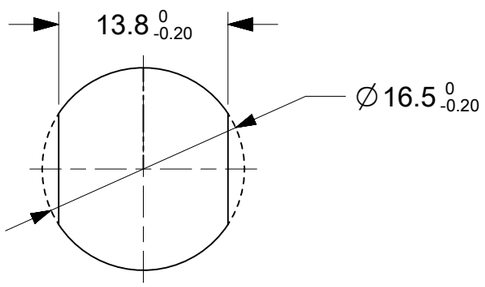

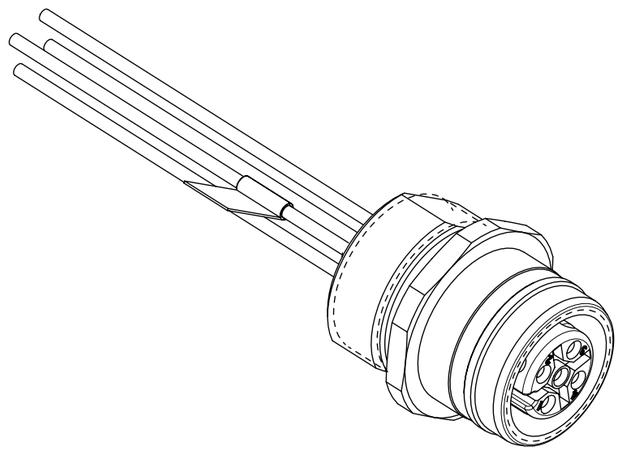

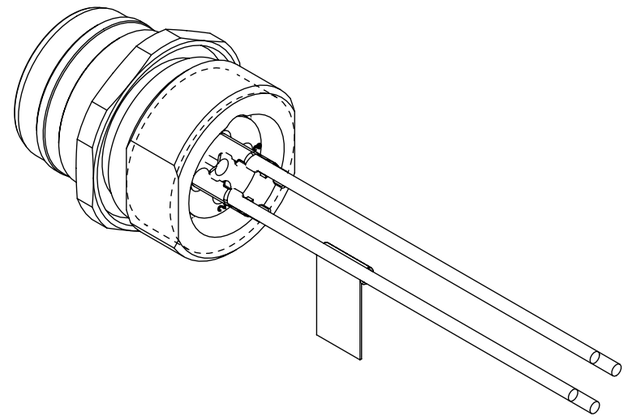

NOTE :

1. POS. 8 LABEL - ON WHITE WIRE FOR 4 POL. VERSIONS
   - ON GREEN/YELLOW OR GREY WIRE FOR 5 AND 8 POL, VERSIONS
   - NO LABEL FOR 12 POL. VERSIONS

BILL OF MATERIAL

ITEM	COMPONENT	MATERIAL	FINISH
1	REC SHELL	BRASS	NICKEL PLATED
2	INSERT	PUR	BLACK
3	CONTACT	BRASS /GOLD	CuZn Ni/Au
4	WIRES	COPPER/PVC	NONE
5	O-RING	NBR	BLACK
6	O-RING	VITON	RED
7	POTTING MATERIAL	WEVO	NONE
8	LABEL	-	YELLOW

DOCUMENT STATUS	P1	RELEASE DATE	2022/07/22 12:02:27

THIS DRAWING CONTAINS INFORMATION THAT IS PROPRIETARY TO MOLEX ELECTRONIC TECHNOLOGIES, LLC AND SHOULD NOT BE USED WITHOUT WRITTEN PERMISSION

SYMBOLS: E/A = 0; E/C = 0; E/F = 0; S = 0; ▼ = 0; C = 0; ☒ = 0; ■ = 0; ▽ = 0

DIMENSION UNITS	SCALE
mm	2:1

GENERAL TOLERANCES (UNLESS SPECIFIED)

ANGULAR TOL	±	1.0 °
4 PLACES	±	
3 PLACES	±	
2 PLACES	±	0.05
1 PLACE	±	0.3
0 PLACES	±	0.5

DRAFT WHERE APPLICABLE MUST REMAIN WITHIN DIMENSIONS

CURRENT REV DESC: NEW P/N ADDED

EC NO: 714426

DRWN:	RSILLER	2022/07/15
CHK'D:	THAERDT	2022/07/22
APPR:	THAERDT	2022/07/22

INITIAL REVISION:

DRWN:	SSM	2017/09/26
APPR:	RSILLER	2017/12/15

THIRD ANGLE PROJECTION | DRAWING: A3-SIZE | SERIES: 120084

molex

REC U12 XP AC FE XM M16 FM WIR BRA AU

PRODUCT CUSTOMER DRAWING

DOCUMENT NUMBER	DOC TYPE	DOC PART	REVISION
1200845107	PSD	000	A6

MATERIAL NUMBER	CUSTOMER	SHEET NUMBER
SEE SHEET 3	GENERAL MARKET	1 OF 3

FORMAT: master-Sheet-A3
REVISION: H
DATE: 2018/01/15

4 POLE VERSIONS

PIN	WIRE COLOR
1	BROWN
2	WHITE
3	BLUE
4	BLACK

5 POLE VERSIONS

PIN	WIRE COLOR
1	BROWN
2	WHITE
3	BLUE
4	BLACK
5	GREEN/YELLOW OR GREY

8 POLE VERSIONS

PIN	WIRE COLOR
1	WHITE
2	BROWN
3	GREEN
4	YELLOW
5	GREY
6	PINK
7	BLUE
8	RED

12 POLE VERSIONS

PIN	WIRE COLOR
1	WHITE
2	BROWN
3	GREEN
4	YELLOW
5	GREY
6	PINK
7	BLUE
8	RED
9	BLACK
10	VIOLET
11	GRAY/PINK
12	RED/BLUE

TABLE 3

POLES	4 POLE	5 POLE	8 POLE	12 POLE
LAYOUT	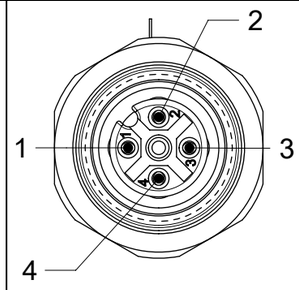	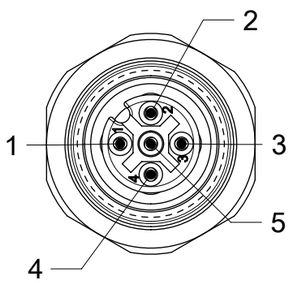	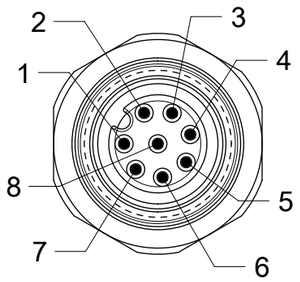	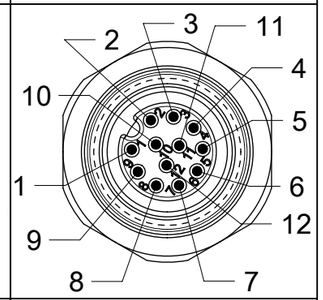
VOLTAGE RATING	250V	60V	30V	30V
CODING	A - Code	A - Code	A - Code	A - Code
AMPERE RATING	4A	4A	2A	1.5A
PROTECTION CLASS CONNECTOR INTERFACE SHELL TO ENCLOSURE	IP 67/69K (in mated condition / when properly installed)			
OPERATING TEMP.	-25°C / 85°C			
CSA CERTIFICATION	FILE NO. LR6837			
WIRE LEAD	0.34 mm² PVC	0.34 mm² PVC	0.25 mm² PVC	0.14 mm² PVC
PIN DIAMETER	1.0 mm	1.0 mm	0.8 mm	0.6 mm
WIRE COLOR	ACCORDING TO IEC 60947-5-2		ACCORDING TO DIN 47100	

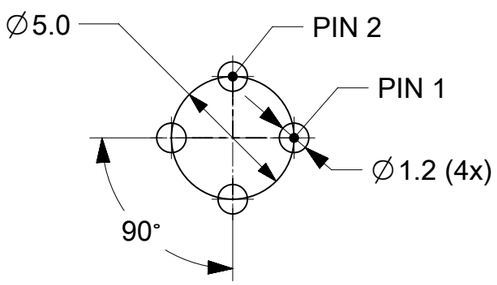

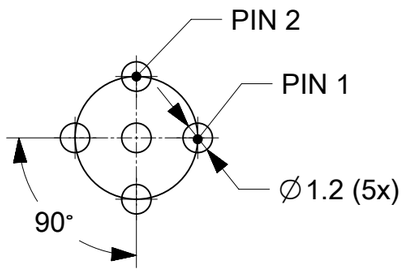

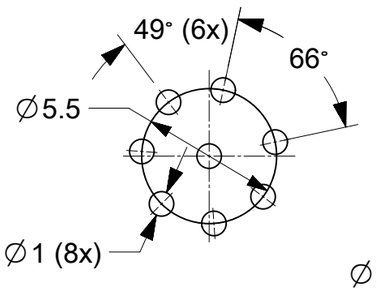

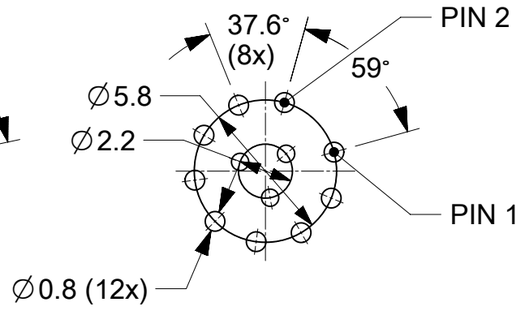

DRILL LAYOUT BACKSIDE

SYMBOLS	
E = 0	
E = 0	
E = 0	
S = 0	
▼ = 0	
C = 0	
☒ = 0	
■ = 0	
▽ = 0	

THIS DRAWING CONTAINS INFORMATION THAT IS PROPRIETARY TO MOLEX ELECTRONIC TECHNOLOGIES, LLC AND SHOULD NOT BE USED WITHOUT WRITTEN PERMISSION

DIMENSION UNITS	SCALE
mm	2:1

GENERAL TOLERANCES (UNLESS SPECIFIED)

ANGULAR TOL	±	1.0 °
4 PLACES	±	
3 PLACES	±	
2 PLACES	±	0.05
1 PLACE	±	0.3
0 PLACES	±	0.5

DRAFT WHERE APPLICABLE MUST REMAIN WITHIN DIMENSIONS

CURRENT REV DESC: NEW P/N ADDED

EC NO: 714426
DRWN: RSILLER 2022/07/15
CHK'D: THAERDT 2022/07/22
APPR: THAERDT 2022/07/22

INITIAL REVISION:
DRWN: SSM 2017/09/26
APPR: RSILLER 2017/12/15

THIRD ANGLE PROJECTION | DRAWING: A3-SIZE | SERIES: 120084

molex

REC U12 XP AC FE XM M16 FM WIR BRA AU

PRODUCT CUSTOMER DRAWING

DOCUMENT NUMBER	DOC TYPE	DOC PART	REVISION
1200845107	PSD	000	A6

MATERIAL NUMBER	CUSTOMER	SHEET NUMBER
SEE SHEET 3	GENERAL MARKET	2 OF 3

DOCUMENT STATUS	P1	RELEASE DATE	2022/07/22 12:02:27

FORMAT: master_tmplt_A3
REVISION: H
DATE: 2018/01/16

PART LIST

4 POLE VERSIONS

MOLEX P/N	ENGINEERING NR.	L [mm]	TOL
1200845107	WR4U20E03C3003	300	±10
1200250006	WR4U20E03C300	300	±10
1200848085	WR4U20E03C500	500	±10
1200848242	WR4U20E03M0203	2000	±10

5 POLE VERSIONS

MOLEX P/N	ENGINEERING NR.	L [mm]	TOL	PIN 5
1200845113	WR5U20E03C3003	300	±10	GN/YE
1200848027	WR5U20E03C500	500	±10	GN/YE
1200848037	WR5U20E03M020	2000	±10	GREY
1200848124	WR5U20E03M010	1000	±10	GN/YE

8 POLE VERSIONS

MOLEX P/N	ENGINEERING NR.	L [mm]	TOL
1200845002	WR8U20E02M010	1000	±10
1200845095	WR8U20E02C300	300	±10

12 POLE VERSIONS

MOLEX P/N	ENGINEERING NR.	L [mm]	TOL
1200845012	WRCU20E01C200	200	±10
1200845013	WRCU20E01C300	300	±10

DOCUMENT STATUS	P1	RELEASE DATE	2022/07/22 12:02:27

FORMAT: master_Sized-A3
REVISION: H
DATE: 2018/01/15

SYMBOLS
E/A = 0
E/C = 0
E/E = 0
S = 0
▼ = 0
C = 0
☒ = 0
■ = 0
▽ = 0

THIS DRAWING CONTAINS INFORMATION THAT IS PROPRIETARY TO MOLEX ELECTRONIC TECHNOLOGIES, LLC AND SHOULD NOT BE USED WITHOUT WRITTEN PERMISSION

DIMENSION UNITS	SCALE
mm	1:1

GENERAL TOLERANCES (UNLESS SPECIFIED)

ANGULAR TOL	±	1.0 °
4 PLACES	±	
3 PLACES	±	
2 PLACES	±	0.05
1 PLACE	±	0.3
0 PLACES	±	0.5

DRAFT WHERE APPLICABLE MUST REMAIN WITHIN DIMENSIONS

CURRENT REV DESC: NEW P/N ADDED

EC NO: 714426
DRWN: RSILLER 2022/07/15
CHK'D: THAERDT 2022/07/22
APPR: THAERDT 2022/07/22

INITIAL REVISION:
DRWN: SSM 2017/09/26
APPR: RSILLER 2017/12/15

THIRD ANGLE PROJECTION | DRAWING: A3-SIZE | SERIES: 120084

molex

REC U12 XP AC FE XM M16 FM WIR BRA AU

PRODUCT CUSTOMER DRAWING

DOCUMENT NUMBER	DOC TYPE	DOC PART	REVISION
1200845107	PSD	000	A6

MATERIAL NUMBER	CUSTOMER	SHEET NUMBER
SEE PART LIST	GENERAL MARKET	3 OF 3

WIRING DIAGRAM

1	WH - WHITE
2	BN - BROWN
3	GN - GREEN
4	YE - YELLOW
5	GY - GREY
6	PK - PINK
7	BU - BLUE
8	RD - RED
9	BK - BLACK
10	VT - VIOLET
11	GYPK - GREY/PINK
12	RDBU - RED/BLUE

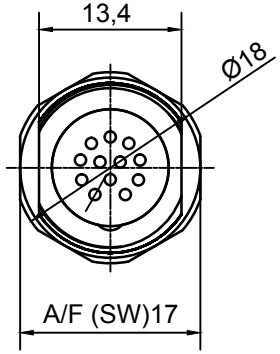

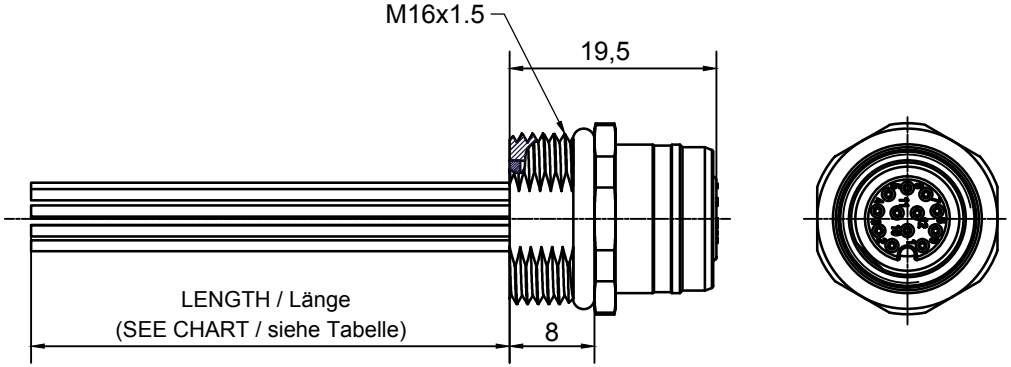

LOCK NUT M16x1.5
P/N: 0900 00090 00010
LOCK NUT NEEDS TO BE ORDER SEPARATE

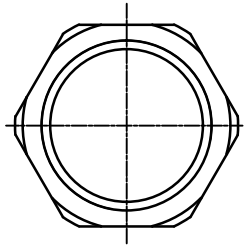

PANEL CUTOUT

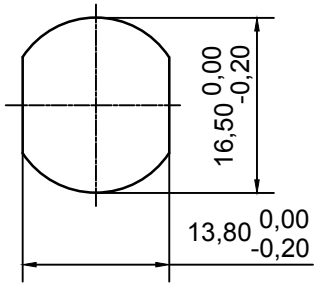

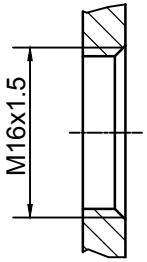

GENERAL CHARACTERISTICS Allgemeine Kennwerte		STANDARD Norm	
NUMBER OF CONTACTS CONTACT CONFIGURATION	Polzahl Kontaktanordnung	IEC 947-5-2	12
RATED VOLTAGE	Bemessungsspannung	IEC 664	30V AC / DC
POLLUTION DEGREE	Verschmutzungsgrad	IEC 664	3
CURRENT CARRYING CAPACITY	Betriebsstrom	IEC 512-3 Test 5 b	1,5A
CONTACT RESISTANCE	Durchgangswiderstand	IEC 512-2 Test 2 A	< 5mOhm
RATED UMPULSE WITHSTAND VOLTAGE	Bemessungsstoßspannung	IEC 664	0,8 kV
TEST VOLTAGE	Prüfspannung	IEC 60512-2 Test 4 A	0,5 kV / 60 sec
INSULATION RESISTANCE	Isolationswiderstand	IEC 512-2 Test 3 A	> 100 MOhm
IP DEGREE OF PROTECTION	IP - Schutzart	IEC 529	IP 67
PIN DIAMETER	Stift Durchmesser		0,6mm
MATERIALS – CONTACTS	Werkstoffe – Kontakte		COPPER ALLOY / Kupferlegierung
MATERIALS – CONTACTS PLATING	Werkstoffe – Kontaktoberfläche		Ni/Au
MATERIALS – DIELECTRIC MATERIAL	Werkstoffe – Kontaktträger		PA 6.6
MATERIALS – GASKETS (O-RING)	Werkstoffe – Dichtung (O-Ring)		NBR
MATERIALS – HOUSING	Werkstoffe – Gehäuse		CuZn (BRASS) WITH/mit NICKEL-PLATED / Ni-Oberfläche
TERMINATION	Anschlußart		CRIMP
FLAMMABILITY – INSERTS	Brennbarkeit – Kontaktträger	UL 94	V-0
FLAMMABILITY – CABLE	Brennbarkeit – Leitung / Kabel	UL 94	VDE 0472 / 804
MECHANICAL OPERATION	Mechanische Lebensdauer		100 MATING CYCLES / Steckzyklen
TEMPERATURE RANGE	Temperaturbereich	IEC 60668-1	-25°C / +90°C

PART-NUMBER	ENGINEERING NO.	LENGTH
Teile-Nummer	Artikel-Nummer	Länge
1200845012	WRCU20E01C200	200 mm
1200845013	WRCU20E01C300	300 mm

(1 : 1)

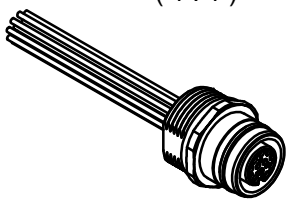

DESCRIPTION			
EC NO: IPG2012-0277			
DRWN: BBRAUCH	2012/01/23		
CH'KD: REISSNER	----		
APPR: REISSNER	2012/02/15		
DESCRIPTION			
REV	1		

QUALITY SYMBOLS: ▼ = 0; (C) = 0

GENERAL TOLERANCES (UNLESS SPECIFIED)

	mm	INCH
4 PLACES	±---	±---
3 PLACES	±---	±---
2 PLACES	±---	±---
1 PLACE	±0.3	±---
ANGULAR ±	1 °	

DRAFT WHERE APPLICABLE MUST REMAIN WITHIN DIMENSIONS

DIMENSION STYLE: MM ONLY	SCALE: 2:1	DESIGN UNITS: METRIC	THIRD ANGLE PROJECTION
DRAWN BY: BBRAUCH	DATE: 2012/01/23	REC U12 12P AC FE STR XM M16 WIR SE SHLD BK ----	
CHECKED BY: REISSNER	DATE: 2012/01/24		
APPROVED BY: REISSNER	DATE: 2012/02/15	molex MOLEX INCORPORATED	
MATERIAL NO.: see table		DOCUMENT NO.: SD-120084-142	SHEET NO.: 1 OF 1
SIZE: A3	THIS DRAWING CONTAINS INFORMATION THAT IS PROPRIETARY TO MOLEX INCORPORATED AND SHOULD NOT BE USED WITHOUT WRITTEN PERMISSION		