MPM3550E

36V, 5A, High-Efficiency, Fast Transient, Non-Isolated, DC/DC Power Module with Integrated Inductor

The Future of Analog IC Technology

DESCRIPTION

The MPM3550E is a high-density, non-isolated, DC/DC power module for space-sensitive applications. The module offers a very compact solution that achieves 5A of continuous output current with fast transient and good stability over a wide input supply and load range. The MPM3550E can provide an adjustable output voltage from 1.0 - 12.0V via an external FB resistor (default 3.3V output). Ultra-high efficiency is achieved through the use of synchronous rectification and control techniques.

The MPM3550E offers standard features, including an internal fixed soft start, remote enable control, and power good indicator. The MPM3550E has fully integrated protection features, including over-current protection (OCP), short-circuit protection (SCP), output under-voltage protection (UVP), input under-voltage lockout (UVLO), and thermal shutdown.

The MPM3550E integrates a switching controller, power switches, inductors, a modest amount of input and output capacitors, and all support components in an advanced 12mmx12mmx3.82mm package. The MPM3550E only requires a minimal number of standard external components. This compact solution helps system design and productivity significantly by offering greatly simplified board design, layout, and manufacturing requirements.

FEATURES

- Integrated Inductor, Switches, Controller
- High-Efficiency Synchronous Mode Control
- Low Component Count and Small Size
- Ease of Design and Fastest Time to Market
- Wide 4.5V to 36V Operating Input Range
- Output Adjustable from 1.0V to 12.0V
- Guaranteed 5A Continuous Output Current
- Ultra-Fast Transient Response
- Internal Fixed Soft-Start Time
- External Frequency Selection Pin
- Power Good (PGOOD) Indicator
- Non-Latch OCP, SCP, UVP, and UVLO
- Thermal Shutdown Protection
- Remote Enable Control (EN)
- Available in an LGA-18 (12mmx12mmx3.82mm) Package
- Weight: 1.4g
- Operating Temperature: -40°C to +125°C
- CISPR25 Class 5 Compliant

APPLICATIONS

- Automotive Systems
- Industrial Supplies
- Telecom and Networking Systems
- Distributed Power and POL Systems

All MPS parts are lead-free, halogen-free, and adhere to the RoHS directive. For MPS green status, please visit MPS website under Quality Assurance. “MPS” and “The Future of Analog IC Technology” are registered trademarks of Monolithic Power Systems, Inc.

TYPICAL APPLICATION

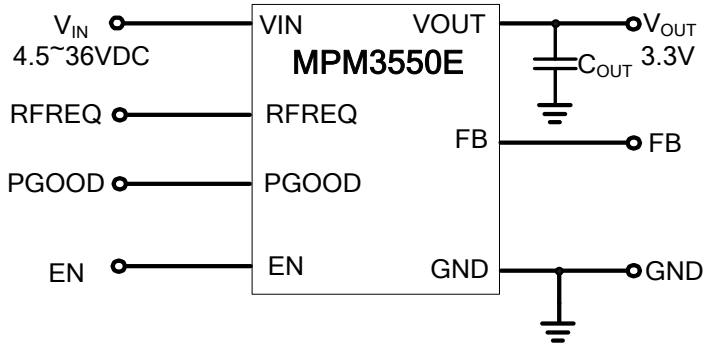

MPS Proprietary Information. Patent Protected. Unauthorized Photocopy and Duplication Prohibited.
© 2022 MPS. All Rights Reserved.

ORDERING INFORMATION

Part Number*	Package	Top Marking	MSL Rating
MPM3550EGLE	LGA-18 (12mmx12mmx3.82mm)	*See Below*	3

TOP MARKING

MPS YYWW
MPM3550E
LLLLLLLLL

MPS: MPS prefix
YY: Year code
WW: Week code
MPM3550E: First eight digits of the part number
LLLLLLLLL: Lot number

PACKAGE REFERENCE

TOP VIEW

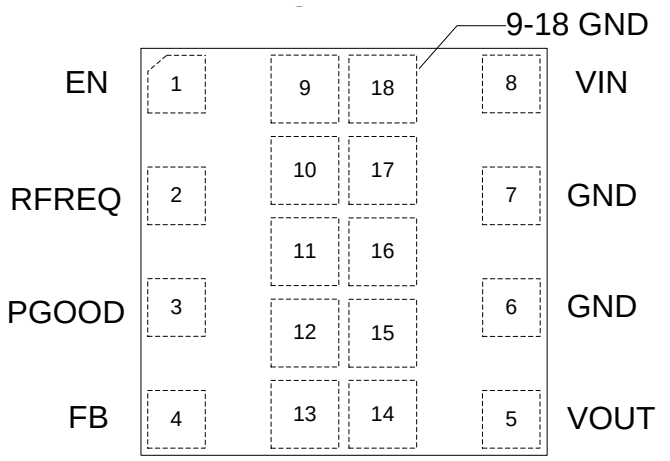

LGA-18 (12mmx12mmx3.82mm)

MPS Proprietary Information. Patent Protected. Unauthorized Photocopy and Duplication Prohibited.
© 2022 MPS. All Rights Reserved.

ABSOLUTE MAXIMUM RATINGS (1)

V_{IN} .....-0.3V to +40V
V_{OUT}.....-0.3V to +14V
All other pins .....-0.3V to +6.0V
Continuous power dissipation (T_A = 25°C) (2)
LGA-18 (12mmx12mm) 2.6W
Junction temperature .....150°C
Lead temperature.....260°C
Storage temperature..... -65°C to 150°C

Recommended Operating Conditions (3)

Continuous supply voltage (V_{IN}).....4.5V to 36V
Output voltage (V_{OUT}).....1.0V to 12.0V
Operating temperature (T_O). .... -40°C to +125°C

Thermal Resistance (4) θ_{JA} θ_{JC}

LGA-18 (12xmm12mmx3.82mm)…….
..... 48.....18 .... °C/W

Notes:

1) Absolute maximum ratings are rated under room temperature unless otherwise noted. Exceeding these ratings may damage the device.
2) The maximum allowable power dissipation is a function of the maximum junction temperature T_J (MAX), the junction-to-ambient thermal resistance θ_{JA}, and the ambient temperature T_A. The maximum allowable continuous power dissipation at any ambient temperature is calculated by P_D (MAX) = (T_J (MAX)-T_A)/θ_{JA}. Exceeding the maximum allowable power dissipation produces an excessive die temperature, causing the module to go into thermal shutdown. Internal thermal shutdown circuitry protects the device from permanent damage.
3) The device is not guaranteed to function outside of its operating conditions.
4) Measured on a 4-layer PCB (63.5mmx63.5mm).
   θ_{JA}: thermal resistance from the junction-to-ambient. This is the natural convection junction-to-ambient air thermal resistance measured in a one cubic foot sealed enclosure.
   θ_{JC}: thermal resistance from junction to the metal lid of the module. This is the junction-to-board thermal resistance with all of the component power dissipation flowing through the entire package.

MPS Proprietary Information. Patent Protected. Unauthorized Photocopy and Duplication Prohibited.
© 2022 MPS. All Rights Reserved.

ELECTRICAL CHARACTERISTICS

V_{IN} = 24V, external C_{OUT} = 22µF, T_J = -40°C to +125°C, unless otherwise noted.

Parameters	Symbol	Condition		Min	Typ	Max	Units
Input Voltage and Current							
Input DC voltage	V_{IN}			4.5		36	V
Maximum input current (5)	I_{IN-MAX}	I_{OUT} = 5A, V_{OUT} = 3.3V			1.6	2	A
Input current (shutdown)	I_{IN}	V_{EN} = 0V			70		µA
Input current (quiescent)	I_{IN}	Enabled, no load, V_{OUT} = 3.3V			500	1000	µA
Input Under-Voltage Lockout (UVLO)							
VIN UVLO rising threshold				3.6	4.0	4.4	V
VIN UVLO falling threshold				2.7	3.1	3.5	V
Output Voltage and Current							
Output voltage range	V_{OUT}	Via an external FB resistor		1.0	3.3	12.0	V
Output voltage precision	V_{OUT}	Overall supply voltage and temperature range, I_{OUT} = 0.5A to 5A	Output 3.3V	-2.0		2.0	%
			Output 5V	-2.0		2.0	%
Output regulation (5)	V_{OUT}	Load regulation (V_{OUT} = 3.3V, I_{OUT} = 0.5A to 5A), T_A = 25°C		-2.0		2.0	%
Output ripple (V_{OUT} = 3.3V) (5)	$V_{OUT (AC)}$	V_{IN} = 12V, I_{OUT} = 5A, T_A = 25°C			17	25	mV
		V_{IN} = 24V, I_{OUT} = 5A, T_A = 25°C			22	30	mV
Output ripple (V_{OUT} = 5V) (5)	$V_{OUT (AC)}$	V_{IN} = 12V, I_{OUT} = 5A, T_A = 25°C			13	25	mV
		V_{IN} = 24V, I_{OUT} = 5A, T_A = 25°C			18	30	mV
Output current	I_{OUT}			0		5	A
Output Turn-On Delay and Rise Time							
Turn-on delay time	t_{DELAY}	I_{OUT} = 0A, from EN high to 10% of the rated V_{OUT}			0.75	1.1	ms
Rise time	t_{RISE}	I_{OUT} = 0A, from 10% to 90% of the rated V_{OUT}		2.6	3.8	5	ms
Efficiency							
Efficiency (V_{OUT} = 3.3V) (5)	η	V_{IN} = 12V, I_{OUT} = 2.5A, T_A = 25°C			92.9		%
		V_{IN} = 24V, I_{OUT} = 2.5A, T_A = 25°C			90.0		%
Efficiency (V_{OUT} = 5V) (5)	η	V_{IN} = 12V, I_{OUT} = 2.5A, T_A = 25°C			94.6		%
		V_{IN} = 24V, I_{OUT} = 2.5A, T_A = 25°C			91.7		%
Transient Load Response (Load: 50% to 100% to 50% of Full Load, dI_{OUT}/dt = 1A/µs)							
Transient load response (5)	V_{PK-PK}	V_{OUT} = 3.3V, T_A = 25°C			100		mV
		V_{OUT} = 5V, T_A = 25°C			105		mV
	$t_{RECOVERY}$	V_{OUT} = 3.3V, T_A = 25°C			25		µs
		V_{OUT} = 5V, T_A = 25°C			30		µs
Frequency							
Switching frequency (5)	f_{SW}	V_{OUT} = 5V, T_A = 25°C, R_{FREQ} = 100kΩ		457	507	557	kHz

MPS Proprietary Information. Patent Protected. Unauthorized Photocopy and Duplication Prohibited.
© 2022 MPS. All Rights Reserved.

ELECTRICAL CHARACTERISTICS *(continued)*

V_{IN} = 24V, external C_{OUT} = 22µF, T_J = -40°C to +125°C, unless otherwise noted.

Parameters	Symbol	Condition	Min	Typ	Max	Units
Enable (EN) (Active High)						
EN input rising threshold	$V_{EN-RISING}$		1.05	1.25	1.45	V
EN input falling threshold	$V_{EN-FALLING}$		0.7	0.86	1.02	V
EN threshold hysteresis	V_{EN-HYS}			400		mV
Power Good (PGOOD)						
PGOOD rising threshold	$PG_{Vth-Rising}$		89%	92%	95%	V_{FB-REF}
PGOOD falling threshold	$PG_{Vth-Falling}$		81%	84%	87%	V_{FB-REF}
PGOOD deglitch time	t_{PGOOD}		600	800	1000	µs
PGOOD default voltage	V_{PGOOD}		4.3	4.5	5.2	V
Thermal Protection						
Thermal shutdown (5)	T_{SD}			175		°C
Thermal shutdown hysteresis (5)	T_{SD-HYS}			45		°C

NOTE:

5) Derived from bench characterization, not tested in production.

MPS Proprietary Information. Patent Protected. Unauthorized Photocopy and Duplication Prohibited.
© 2022 MPS. All Rights Reserved.

TYPICAL PERFORMANCE CHARACTERISTICS

V_{IN} = 24V, V_{OUT} = 3.3V, external C_{OUT} = 3 x 22µF, T_A = 25°C, unless otherwise noted.

Output Current vs. Efficiency

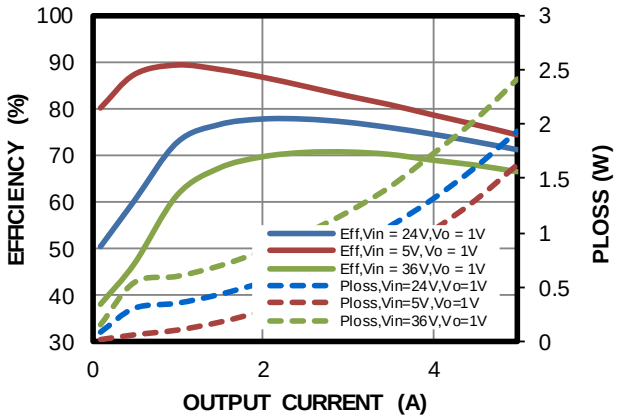

Output Current vs. Efficiency

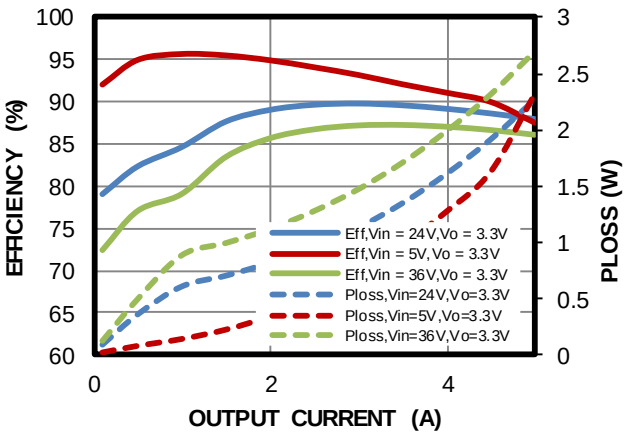

Output Current vs. Efficiency

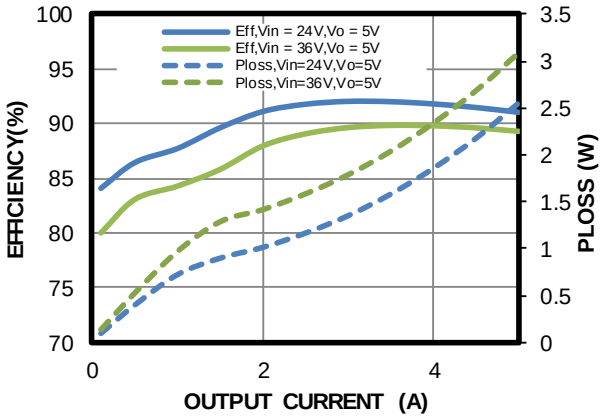

Output Current vs. Load Regulation

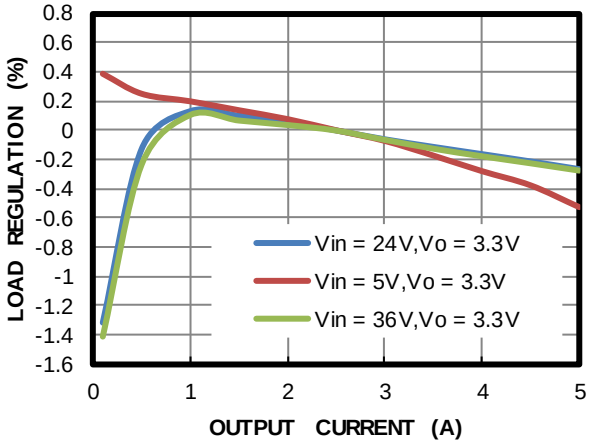

Input Voltage vs. Line Regulation

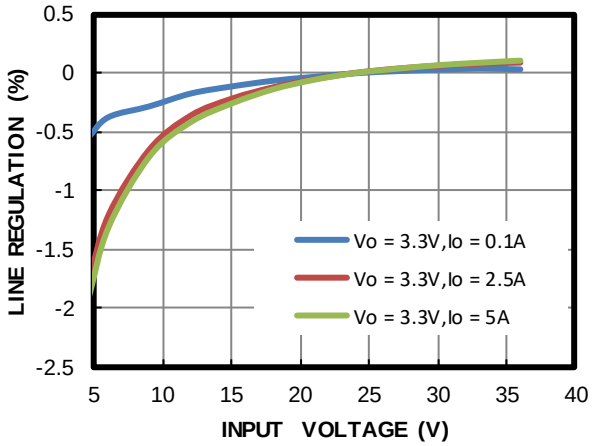

Conducted EMI

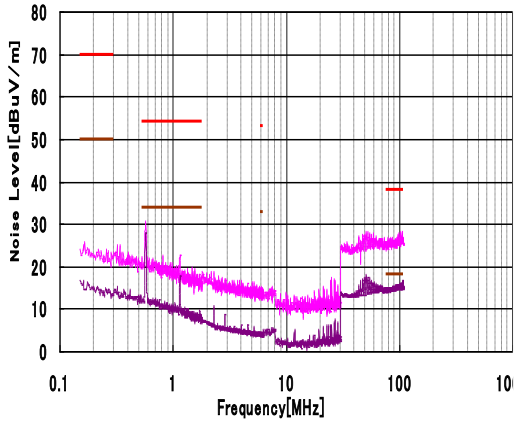

MPS Proprietary Information. Patent Protected. Unauthorized Photocopy and Duplication Prohibited.
© 2022 MPS. All Rights Reserved.

TYPICAL PERFORMANCE CHARACTERISTICS *(continued)*

V_{IN} = 24V, V_{OUT} = 3.3V, external C_{OUT} = 3 x 22µF, T_A = 25°C, unless otherwise noted.

Radiated: EMI

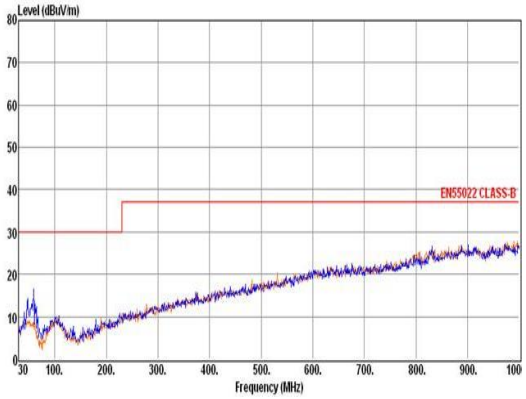

Output Current vs. T_{RISE}

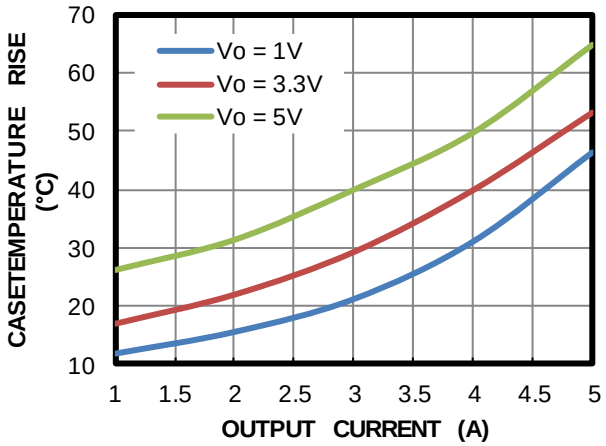

Thermal Derating

V_{IN} = 24V, V_{OUT} = 1V/3.3V/5V

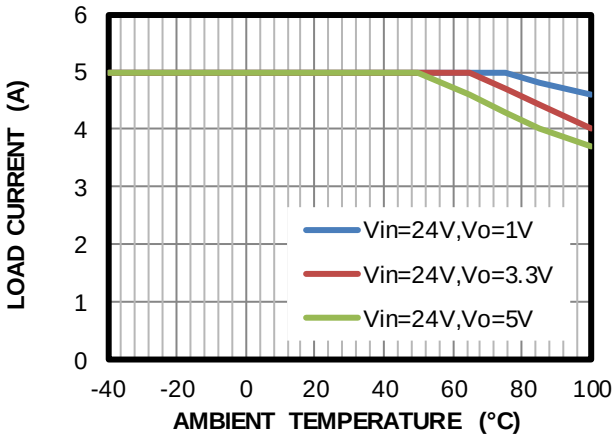

MPS Proprietary Information. Patent Protected. Unauthorized Photocopy and Duplication Prohibited.
© 2022 MPS. All Rights Reserved.

TYPICAL PERFORMANCE CHARACTERISTICS *(continued)*

V_{IN} = 24V, V_{OUT} = 3.3V, External C_{OUT} = 3 x 22µF, T_A = 25°C, unless otherwise noted.

V_{IN} Start-Up

V_{IN} = 24V, V_{OUT} = 3.3V, I_{OUT} = 0A

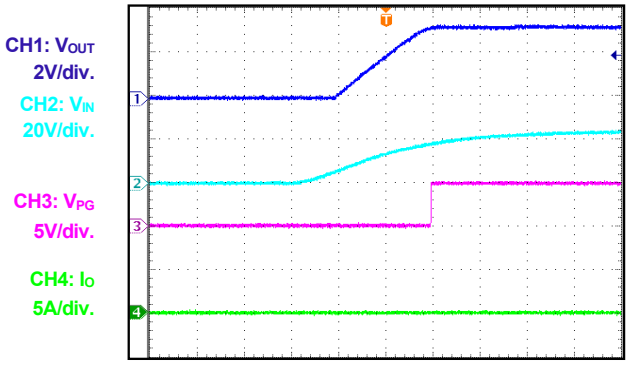

2ms/div.

V_{IN} Start-Up

V_{IN} = 24V, V_{OUT} = 3.3V, I_{OUT} = 5A

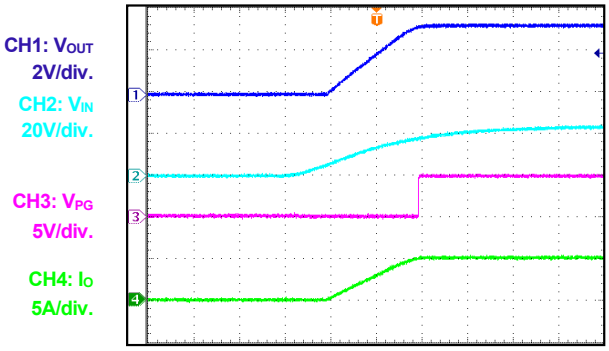

2ms/div.

V_{IN} Shutdown

V_{IN} = 24V, V_{OUT} = 3.3V, I_{OUT} = 0A

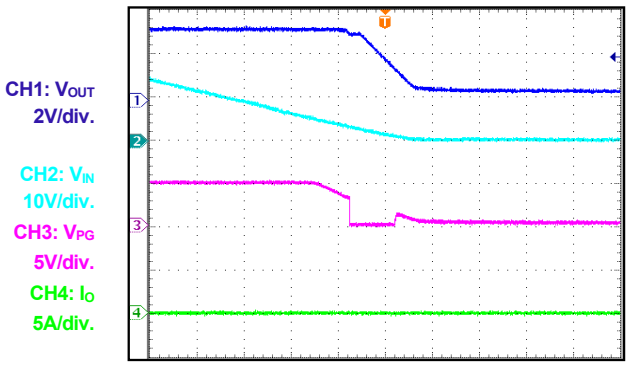

20ms/div.

V_{IN} Shutdown

V_{IN} = 24V, V_{OUT} = 3.3V, I_{OUT} = 5A

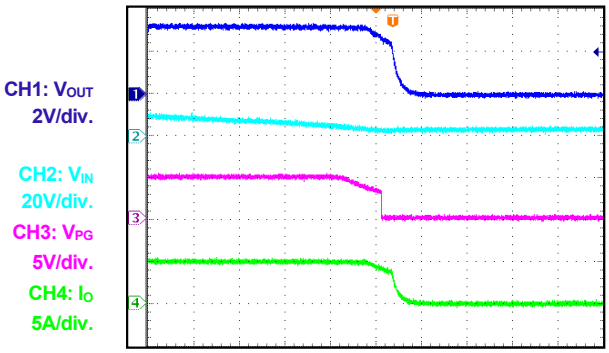

200µs/div.

EN Start-Up

V_{IN} = 24V, V_{OUT} = 3.3V, I_{OUT} = 0A

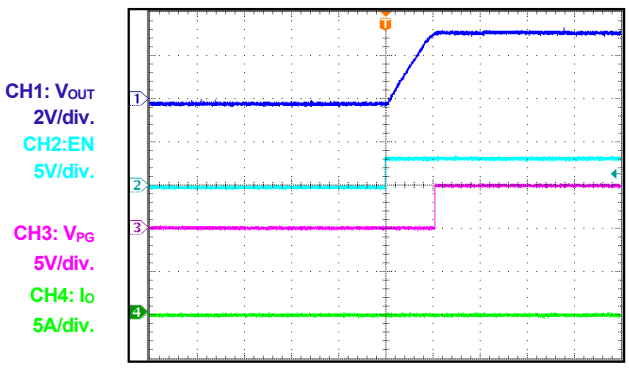

4ms/div.

EN Start-Up

V_{IN} = 24V, V_{OUT} = 3.3V, I_{OUT} = 5A

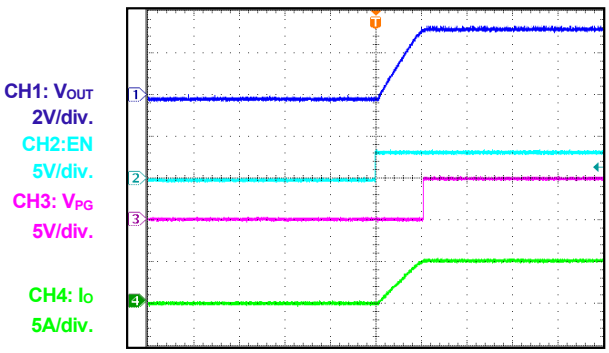

4ms/div.

MPS Proprietary Information. Patent Protected. Unauthorized Photocopy and Duplication Prohibited.
© 2022 MPS. All Rights Reserved.

TYPICAL PERFORMANCE CHARACTERISTICS *(continued)*

V_{IN} = 24V, V_{OUT} = 3.3V, external C_{OUT} = 3 x 22µF, T_A = 25°C, unless otherwise noted.

EN Shutdown

V_{IN} = 24V, V_{OUT} = 3.3V, I_{OUT} = 0A

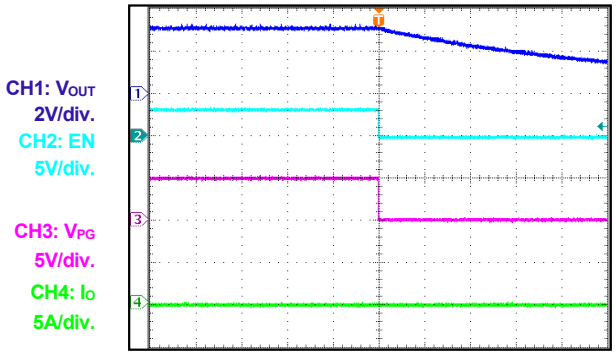

200ms/div.

EN Shutdown

V_{IN} = 24V, V_{OUT} = 3.3V, I_{OUT} = 5A

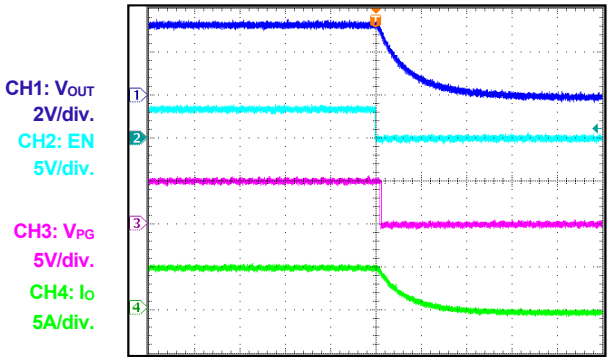

40µs/div.

Steady State

V_{IN} = 24V, V_{OUT} = 3.3V, I_{OUT} = 0A

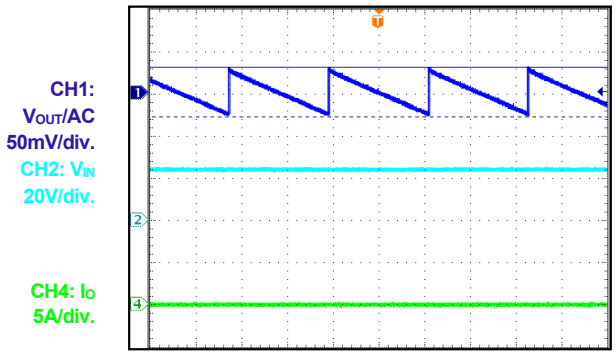

10ms/div.

Steady State

V_{IN} = 24V, V_{OUT} = 3.3V, I_{OUT} = 5A

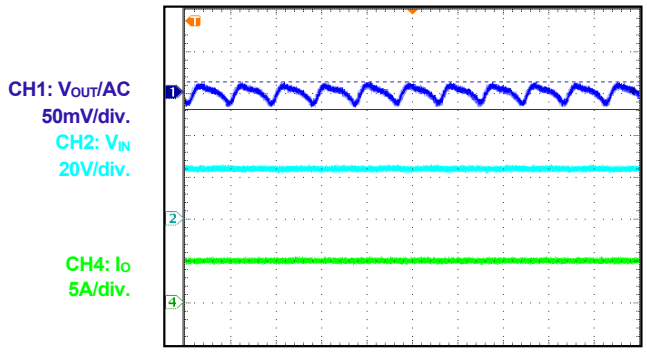

2µs/div.

SCP Entry

V_{IN} = 24V, V_{OUT} = 3.3V, I_{OUT} = 0A

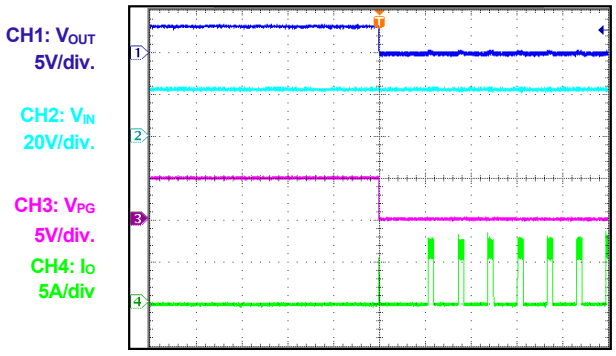

20ms/div.

SCP Entry

V_{IN} = 24V, V_{OUT} = 3.3V, I_{OUT} = 5A

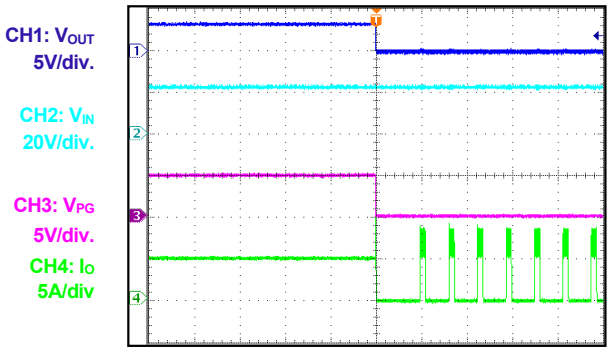

20ms/div.

MPS Proprietary Information. Patent Protected. Unauthorized Photocopy and Duplication Prohibited.
© 2022 MPS. All Rights Reserved.

TYPICAL PERFORMANCE CHARACTERISTICS *(continued)*

V_{IN} = 24V, V_{OUT} = 3.3V, external C_{OUT} = 3 x 22µF, T_A = 25°C, unless otherwise noted.

SCP Recovery

V_{IN} = 24V, V_{OUT} = 3.3V, I_{OUT} = 0A

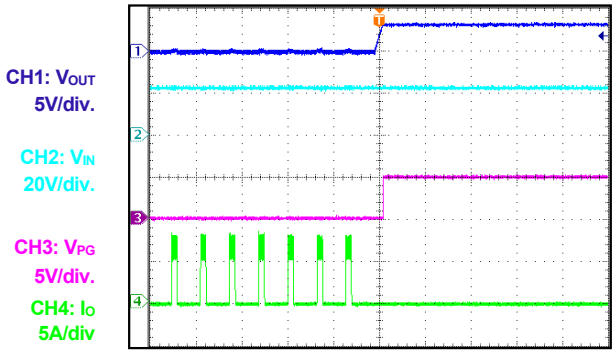

20ms/div.

SCP Recovery

V_{IN} = 24V, V_{OUT} = 3.3V, I_{OUT} = 5A

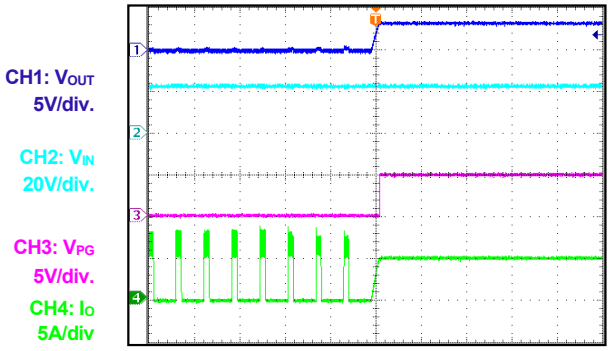

20ms/div.

SCP Steady State

V_{IN} = 24V, V_{OUT} = 3.3V

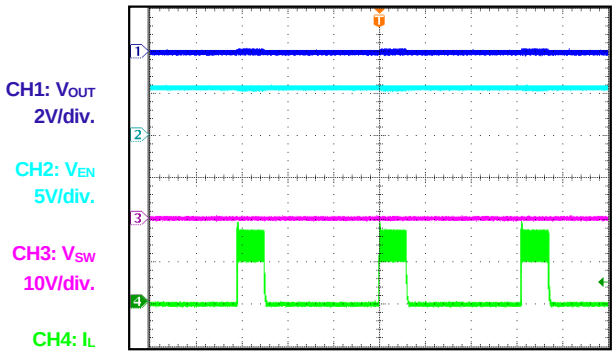

400ms/div.

Current Limit

V_{IN} = 24V, V_{OUT} = 3.3V

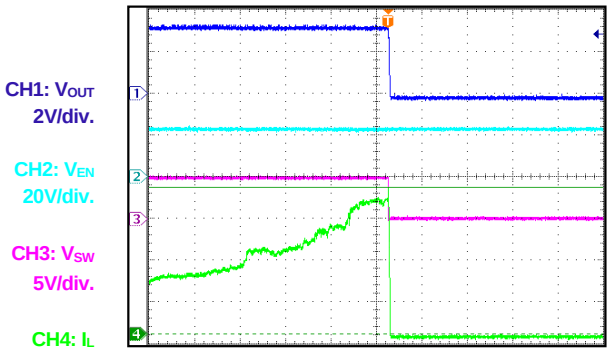

4ms/div.

Transient

V_{IN} = 24V, V_{OUT} = 3.3V, I_{OUT} = 2.5 -> 5A

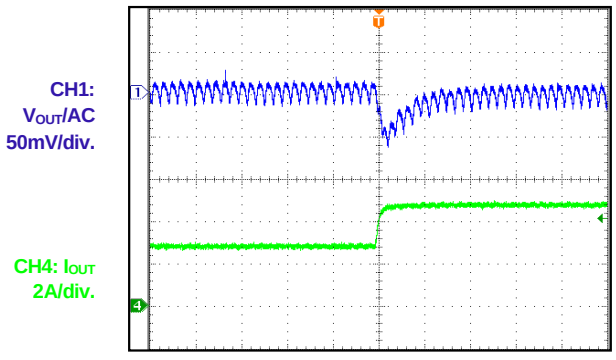

10µs/div.

Transient

V_{IN} = 24V, V_{OUT} = 3.3V, I_{OUT} = 5 -> 2.5A

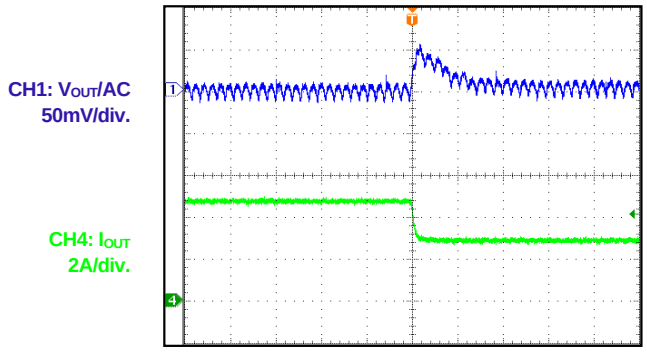

10µs/div.

MPS Proprietary Information. Patent Protected. Unauthorized Photocopy and Duplication Prohibited.
© 2022 MPS. All Rights Reserved.

PIN FUNCTIONS

PIN #	Name	Description
1	EN	**Enable.** Drive EN high to turn on the module. Drive EN low to turn off the module.
2	RFREQ	**Frequency set.** RFREQ is the input voltage and the frequency-set resistor connected to GND to determine the on period. Do not float RFREQ.
3	PGOOD	**Power good indication.** The output of PGOOD rises high if the output voltage exceeds 90% of the rated voltage. The output of PGOOD drops down if the output voltage is lower than 85% of the rated voltage.
4	FB	**Feedback point.** The MPM3550E regulate FB to 0.815V. Connect an external resistor (R_{FB1}) from FB to VOUT to set the output voltage below 3.3V. For output voltages higher than 3.3V, connect an external resistor (R_{FB2}) from FB to GND.
5	VOUT	**Output voltage.** VOUT is connected to the internal power inductor and output capacitor. Connect VOUT to the output load and connect external bypass capacitors between VOUT and VIN if needed.
6, 7, 9-18	GND	**Ground of the module.**
8	VIN	**Input voltage.** VIN supplies power to the converter. Connect VIN to the input supply. Connect external bypass capacitors between VIN and GND (pin 7) if needed.

MPS Proprietary Information. Patent Protected. Unauthorized Photocopy and Duplication Prohibited.
© 2022 MPS. All Rights Reserved.

BLOCK DIAGRAM

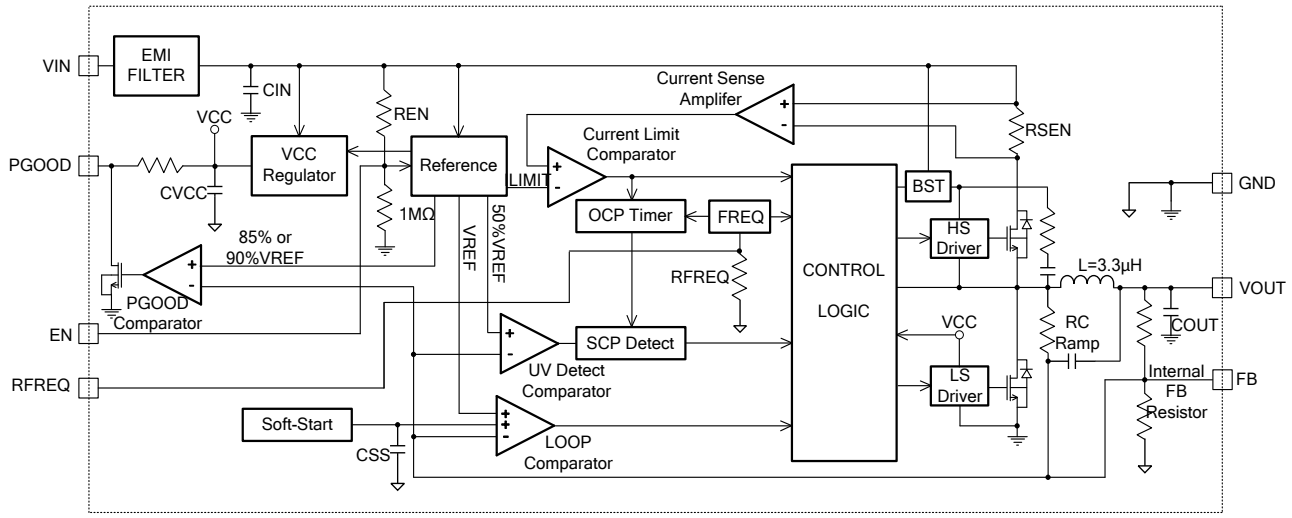

Figure 1: Functional Block Diagram

MPS Proprietary Information. Patent Protected. Unauthorized Photocopy and Duplication Prohibited.
© 2022 MPS. All Rights Reserved.

OPERATION

The MPM3550E is a fully integrated, synchronous, rectified, step-down, non-isolated, switch-mode power module. The MPM3550E operates with a wide 4.5V to 36V input supply range and can achieve 5A of continuous output current over an ambient temperature range of -40°C to +125°C. The MPM3550E provides a default 3.3V output voltage and can be adjusted to a range of 1.0 - 12.0V via an external FB resistor.

Light-Load Operation

At light-load or no-load conditions, the MPM3550E reduces the switching frequency automatically to maintain high efficiency. After the output current exceeds a critical current limit, the switching frequency remains fairly constant over the output current range.

Enable Control (EN)

The MPM3550E can be enabled or disabled via a remote EN signal referenced to ground. The remote EN control operates with a positive logic compatible with popular logic devices. A positive logic implies that the converter is enabled if the EN signal goes high and disabled if it goes low. The rising threshold is 1.25V, and the trailing threshold is about 390mV lower.

EN is connected to VIN through a pull-up resistor internally, allowing EN to be floated to enable the module. If an application requires EN to be controlled, use a suitable logic device to interface with EN.

An internal 6.5V Zener diode on EN clamps the EN voltage to prevent runaway. Therefore, when driving EN directly with an external logic signal, use a signal voltage below 6V to prevent damage to the Zener diode.

Internal Soft Start (SS)

Soft start prevents the output voltage from overshooting during start-up. When the module starts, an internal circuitry generates a soft-start voltage (V_{SS}), which ramps up slowly at a controlled slew rate. When V_{SS} is lower than the internal reference (V_{REF}), V_{SS} overrides V_{REF} as the error amplifier reference. Once V_{SS} exceeds V_{REF}, V_{REF} acts as the reference. At this point, the soft start finishes, and the MPM3550E enters steady-state operation. The soft-start time is set to about 4.5ms internally.

If V_{FB} drops somehow, V_{SS} tracks V_{FB}. This function prevents an output voltage overshoot during short-circuit recovery. When the short circuit is removed, V_{SS} ramps up as if it is a fresh soft-start process.

Power Good Indicator (PGOOD)

The MPM3550E has a power good indicator (PGOOD). PGOOD is the open drain of a MOSFET connected to an internal 5V source through a 100kΩ resistor. In the presence of an input voltage, the MOSFET turns on so that PGOOD is pulled to GND before the soft start is ready. After V_{FB} reaches 90%xV_{REF}, PGOOD is pulled high after a delay (typically 700μs). When V_{FB} drops to 85%xV_{REF}, PGOOD is pulled low to indicate a failure output status. The default voltage of PGOOD is about 5V. If another voltage is needed for compatibility, an appropriate resistor can be placed between PGOOD and GND or an external voltage source.

Switching Frequency

The duty ratio remains at V_{OUT}/V_{IN}, making the switching frequency fairly constant over the input voltage range. The switching frequency can be set with Equation (1):

$$F_{SW}(kHz) = \frac{10^6}{[\frac{96 \times R_{FREQ}(k\Omega)}{V_{IN}} + t_{DELAY}(ns)] \times \frac{V_{IN}}{V_{OUT}}} \quad (1)$$

Where t_{DELAY} is the comparator delay (~20ns). The external frequency resistor values for 500kHz operations is shown in Table 1.

Table 1: External R_{FREQ} Values

V_{IN} (V)	V_{OUT} (V)	Recommended External R_{FREQ} (kΩ)	f_{SW} (kHz)
24	1	15.8	503
24	1.5	26.1	505
24	1.8	31.6	508
24	2.5	47	502
24	3.3	63.4	503
24	5	100	496
24	12	243	504

MPS Proprietary Information. Patent Protected. Unauthorized Photocopy and Duplication Prohibited.
© 2022 MPS. All Rights Reserved.

Over-Current Protection (OCP) and Short-Circuit Protection (SCP)

To provide protection in an over-current or short-circuit fault condition, the MPM3550E is equipped with an internal current limit. Once the internal inductor current exceeds the current limit, the switches stop. Simultaneously, the over-current protection (OCP) timer starts. The OCP timer is set to 100μs. Short-circuit protection (SCP) is triggered if the current limit is reached in each cycle during this 100μs time frame.

If a short circuit occurs, the MPM3550E reaches its current limit immediately, and V_{FB} drops below 50%xV_{REF} (0.815V). The module considers this to be an output dead short and enters hiccup SCP mode immediately.

In hiccup mode, the module disables the output power stage, discharges the soft-start capacitor, and attempts to soft start automatically. If the over-current or short-circuit condition still remains after the soft start ends, the module repeats this operation cycle until the fault condition is removed and the output rises back to the regulation level. This protection mode reduces the average short-circuit current greatly by restarting the part periodically to alleviate thermal issues and protect the module.

Under-Voltage Protecting (UVP)

The MPM3550E also monitors V_{FB} to detect an output under-voltage condition. If V_{FB} drops below 50%xV_{REF}, under-voltage protection (UVP) is triggered, and a current limit triggers SCP.

Input Under-Voltage Lockout (UVLO) Protection

The MPM3550E has input under-voltage lockout protection (UVLO) to ensure reliable output power. This function prevents the module from operating at an insufficient voltage. This is a non-latch protection.

Thermal Shutdown

The module implements thermal protection by monitoring the junction temperature of the internal IC. This function prevents the device from operating at exceedingly high temperatures. If the junction temperature exceeds the threshold value (175°C), the entire chip shuts down. This is a non-latch protection. There is a hysteresis of about 45°C. Once the junction temperature drops to about 130°C, the module resumes operation by initiating a soft start.

MPS Proprietary Information. Patent Protected. Unauthorized Photocopy and Duplication Prohibited.
© 2022 MPS. All Rights Reserved.

APPLICATION INFORMATION

Output Voltage Setting

The MPM3550E uses an internal FB resistor divider to set a default 3.3V output voltage. The upper resistor divider is 31.6kΩ, and the lower divider resistor is 10kΩ (see Figure 2).

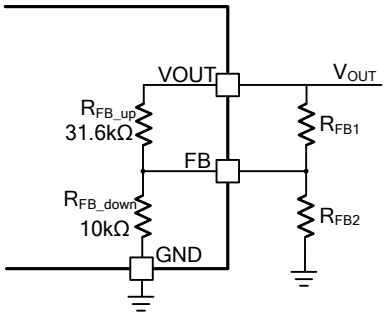

Figure 2: FB Resistors for Setting Output Voltage

The MPM3550E regulate its FB pin at 0.815V. By connecting an external resistor to FB, the output can be set to any voltage between 1 - 12V. For applications with a V_{OUT} lower than 3.3V, connect an appropriate resistor (R_{FB1}) between FB and VOUT. For applications with a V_{OUT} over 3.3V, connect an appropriate resistor (R_{FB2}) between FB and GND. Calculate the rough value of this resistor with Equation (2) and Equation (3):

$$R_{FB1} = \frac{31.6//620\times(V_{OUT}-0.815)}{3.3-V_{OUT}}, V_{OUT} < 3.3V \quad (2)$$

$$R_{FB2} = \frac{31.6//620\times 0.815}{V_{OUT}-3.3}, V_{OUT} > 3.3V \quad (3)$$

The calculated resistance may need fine-tuning during the bench test. For some typical applications, Table 2 provides the corresponding R_{FB} values for different output voltages.

Table 2: R_{FB} Values for Typical V_{OUT}

V_{OUT} (V)	R_{FB1} (kΩ)	R_{FB2} (kΩ)
1.0	2.4	NS
1.2	5.49	NS
1.5	11.5	NS
1.8	19.6	NS
2.5	63.4	NS
3.3	NS	NS
5	NS	14.3
12	NS	2.7

Under-Voltage Lockout Point Setting

The MPM3550E has a 4.0V built-in UVLO turn-on threshold with a 900mV hysteresis. When the supply voltage exceeds the UVLO turn-on threshold voltage, the module powers up. It shuts off when the supply voltage falls below the UVLO turn-off threshold voltage. An external resistor between EN and GND can be used to achieve a higher equivalent UVLO threshold (see Figure 3).

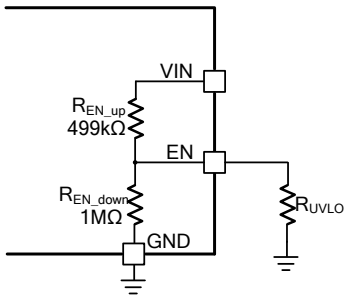

Figure 3: Adjustable UVLO with External Resistor

The resistor for adjusting the UVLO can be calculated with Equation (4):

$$R_{UVLO}(k\Omega) = \frac{623.75}{V_{IN}-1.87} \quad (4)$$

The calculated resistance may need fine-tuning during the bench test.

Selecting the Input Capacitor

The MPM3550E has three, internal, 4.7µF input ceramic capacitors. This is sufficient for common applications. To minimize the input ripple voltage, extra external capacitors can be placed adjacent to the VIN pin of the module.

For the best performance, use ceramic capacitors with low ESR. The capacitance can vary significantly with the temperature. Capacitors with X5R and X7R ceramic dielectrics are recommended because they are fairly stable over a wide temperature range. Other types of capacitors, including Y5V and Z5U, are not recommended since they lose too much capacitance with the frequency, temperature, and bias voltage.

For a small solution size, choose a capacitor with a proper package size and a rating voltage

MPS Proprietary Information. Patent Protected. Unauthorized Photocopy and Duplication Prohibited.
© 2022 MPS. All Rights Reserved.

compliant to the input specification. Table 3 shows a list of recommended input capacitors.

Table 3: Recommended Input Capacitors

Value	Description	Vendor	Part Number
4.7µF	50V,X7S,0805	Murata	GRM21BC71H475KE11
4.7µF	50V,X6S,0805	TDK	C2012X6S1H475K125AC
10µF	50V,X7R,1210	Murata	GRM32ER71H106KA12
10µF	50V,X7R,1210	TDK	C3225X7R1H106M250AC
10µF	25V,X7S,0805	Murata	GRM21BC71E106KE11
10µF	25V,X5R,0603	TDK	C1608X5R1E106M080AC

The capacitors must also have a ripple current rating that exceeds the converter's maximum input ripple current. Estimate the input ripple current with Equation (5):

$$I_{CIN} = I_{OUT} \times \sqrt{\frac{V_{OUT}}{V_{IN}} \times (1 - \frac{V_{OUT}}{V_{IN}})} \quad (5)$$

The worst-case condition occurs at $V_{IN} = 2V_{OUT}$, shown in Equation (6):

$$I_{CIN} = \frac{I_{OUT}}{2} \quad (6)$$

For simplification, choose an input capacitor with an RMS current rating that exceeds half the maximum load current.

The input capacitance value determines the converter input voltage ripple. If there is an input voltage ripple requirement in the application, choose an external capacitor that meets the specification.

Estimate the input voltage ripple with Equation (7):

$$\Delta V_{IN} = \frac{I_{OUT}}{F_{SW} \times C_{IN}} \times \frac{V_{OUT}}{V_{IN}} \times (1 - \frac{V_{OUT}}{V_{IN}}) \quad (7)$$

The worst-case condition occurs at $V_{IN} = 2V_{OUT}$, shown in Equation (7):

$$\Delta V_{IN} = \frac{1}{4} \times \frac{I_{OUT}}{F_{SW} \times C_{IN}} \quad (8)$$

Selecting the Output Capacitor

The MPM3550E has an internal, 10µF, output ceramic capacitor for stable operation. To reduce the output ripple and improve the load transient response, it is recommended to add an external output capacitor as close to the board as possible.

Low ESR ceramic capacitors are recommended for the best performance. The capacitance can vary significantly with the temperature. Capacitors with X5R or X7R ceramic dielectrics are recommended because they are fairly stable over a wide temperature range. Other types of capacitors, including Y5V and Z5U, are not recommended since these lose too much capacitance with the frequency, temperature, and bias voltage. Initial values of 10 - 47µF may be tried in either single or multiple capacitor configurations in parallel. Table 4 shows a list of recommended output capacitors.

Table 4: Recommended Output Capacitors

Value	Description	Vendor	Part Number
10µF	25V,X7S,0805	Murata	GRM21BC71E106KE11L
10µF	16V, X5R,0805	TDK	C2012X5R1C106K
22µF	16V,X5R,0805	Murata	GRM219R61C226ME15L
22µF	16V,X7R,0805	TDK	C2012X7R1C226MT000N
47µF	16V, X5R,1210	Murata	GRM32ER61C476ME15L

The output voltage ripple can be estimated with Equation (9):

$$\Delta V_{OUT} = \frac{V_{OUT}}{f_{SW} \times L} \times (1 - \frac{V_{OUT}}{V_{IN}}) \times (R_{ESR} + \frac{1}{8 \times f_{SW} \times C_{OUT}}) \quad (9)$$

When using ceramic capacitors, the capacitance dominates the impedance at the switching frequency. The capacitance also dominates the output voltage ripple. For simplification, estimate the output voltage ripple with Equation (10):

$$\Delta V_{OUT} = \frac{V_{OUT}}{8 \times f_{SW}^2 \times L \times C_{OUT}} \times (1 - \frac{V_{OUT}}{V_{IN}}) \quad (10)$$

EMI Considerations

High radiated EMI noise is a disadvantage for switching regulators. Fast switching turn-on and turn-off create a large di/dt change in the converters, which act as the radiation sources in most systems. The MPM3550E is designed with an input EMI filter and other features to make its radiated emissions compliant with several EMC specifications, including CISPR22 Class B. The MPM3550E can meet CISPR25 Class 5 specs by adding only a small external input filter. For example, an LC low-pass filter consisting of two, 10µF capacitors and a 3.3µH inductor is sufficient. Conducted emission

MPS Proprietary Information. Patent Protected. Unauthorized Photocopy and Duplication Prohibited.
© 2022 MPS. All Rights Reserved.

specifications, including CISPR22 Class B and CISPR25 Class 5, can be met with this filter. The filter inductor must be placed at a certain distance to the module main inductor to avoid magnetic coupling. A shielded inductor is recommended (see Figure 4).

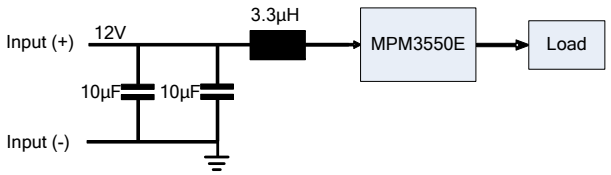

Figure 4: MPM3550E with EMI filter

Input Fusing

Certain applications may require fuses at the inputs of the power module. Fuses should be used when there is the possibility of sustained input voltage reversal, which is not current-limited. For safety, it is recommend to install a fast blow fuse in the ungrounded input supply line. The installer must observe all relevant safety standards and regulations.

Thermal Considerations

The MPM3550E can accommodate a wide range of ambient temperatures due to its extremely high power conversion efficiency and low power dissipation. However, the output current may need to be derated if it is required to operate in a high ambient temperature or deliver a large amount of continuous power. The amount of the current derating depends on the input voltage, output power, and ambient temperature. The temperature rise curves in the Typical Performance Characteristics section can be used as a guide. These curves were generated by an MPM3550E mounted to a 40cm^2, 2-layer, FR4, printed circuit board (PCB). Boards of other sizes and layer counts can exhibit different thermal behavior, making it inconvenient for users to verify the proper operation over the intended system's line, load, and environmental operating conditions.

The thermal shutdown temperature of the MPM3550E is 175°C, so the layout of the circuit should be done carefully to ensure good heat sinking. The bulk of the heat flows through the bottom of the MPM3550E module and the pads into the PCB. Consequently, a poor PCB design can cause excessive heat, resulting in impaired performance or reliability.

PCB Layout Guidelines

The difficult parts of PCB layout are alleviated or even eliminated by the high level of integration of the MPM3550E. To achieve optimal electrical and thermal performance, an optimized PCB layout is critical. For best results, refer to Figure 5 and follow the guidelines below.

1. Use large copper areas for the power planes (VIN, VOUT, and GND) to minimize conduction loss and thermal stress.
2. Use multiple vias to connect the power planes to internal layers.
3. Place the vias away from the pads and vias on the module board.

   These vias can provide a good connection and thermal path to the internal planes of the PCB.
4. Place ceramic input and output capacitors close to the module pins to minimize high frequency noise.
5. Keep the connections as short and wide as possible.
6. Place R_{FB} as close to FB as possible.

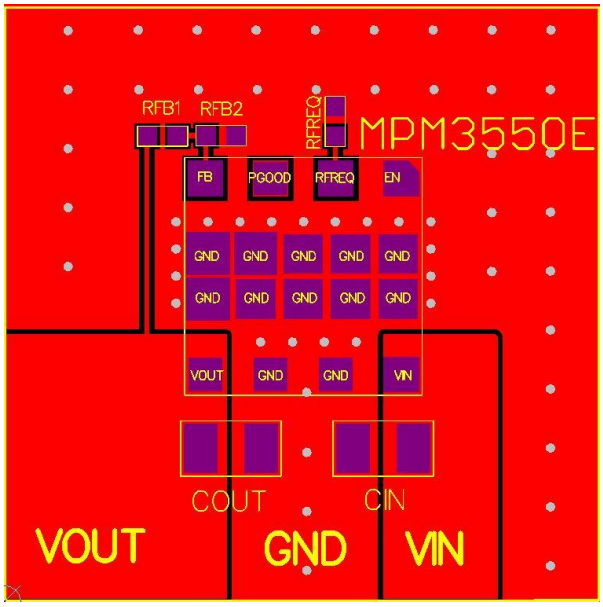

Figure 5: Recommended Layout (Top Layer)

MPS Proprietary Information. Patent Protected. Unauthorized Photocopy and Duplication Prohibited.
© 2022 MPS. All Rights Reserved.

TYPICAL APPLICATION CIRCUITS

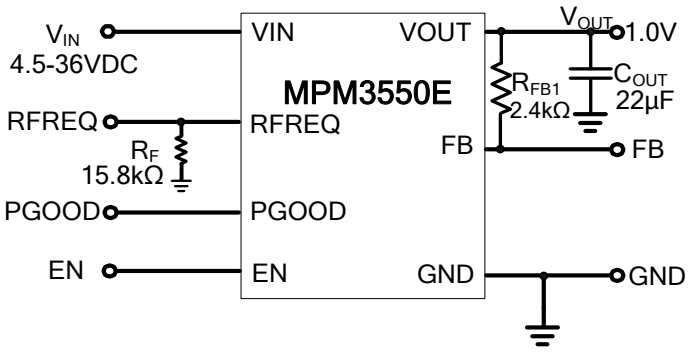

Figure 6: Typical Application Circuit with 1.0V Output

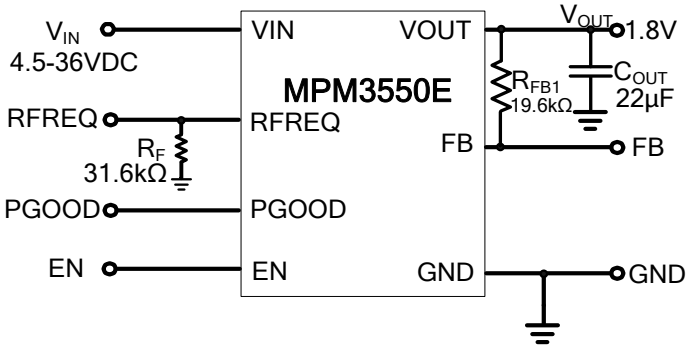

Figure 7: Typical Application Circuit with 1.8V Output

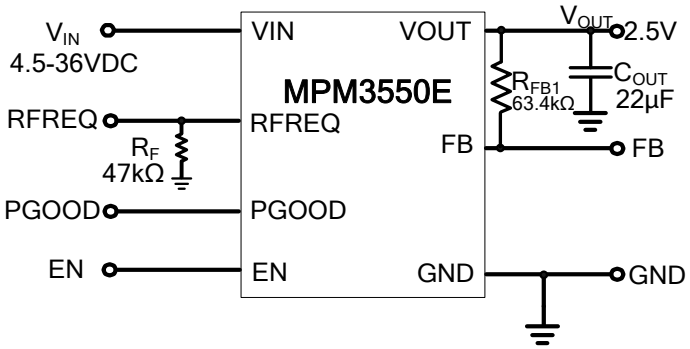

Figure 8: Typical Application Circuit with 2.5V Output

MPS Proprietary Information. Patent Protected. Unauthorized Photocopy and Duplication Prohibited.
© 2022 MPS. All Rights Reserved.

TYPICAL APPLICATION CIRCUITS *(continued)*

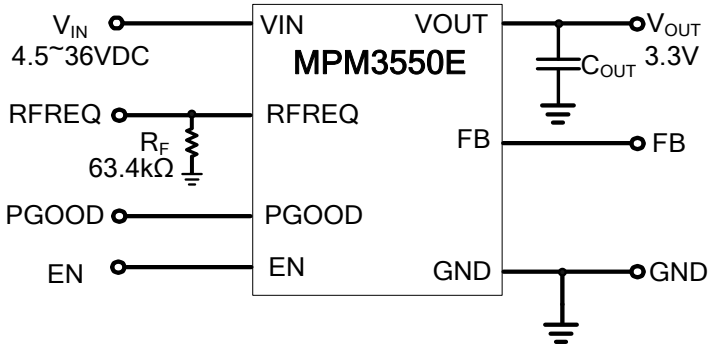

Figure 9: Typical Application Circuit with 3.3V Output

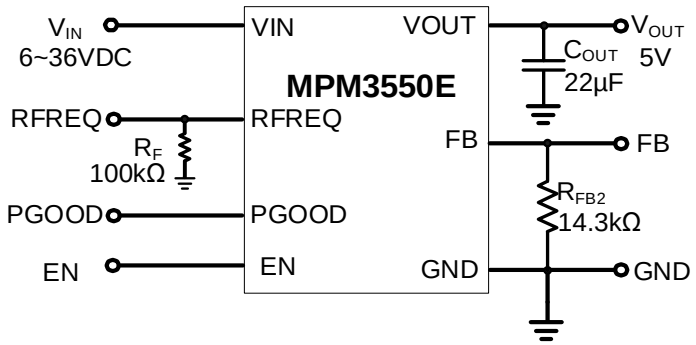

Figure 10: Typical Application Circuit with 5V Output

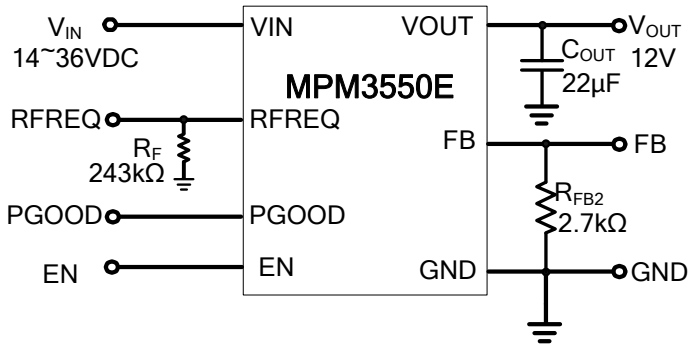

Figure 11: Typical Application Circuit with 12V Output

MPS Proprietary Information. Patent Protected. Unauthorized Photocopy and Duplication Prohibited.
© 2022 MPS. All Rights Reserved.

PACKAGE INFORMATION

LGA-18 (12mmx12mmx3.82mm)

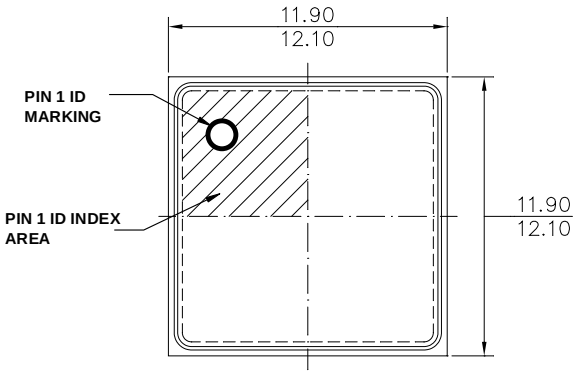

TOP VIEW

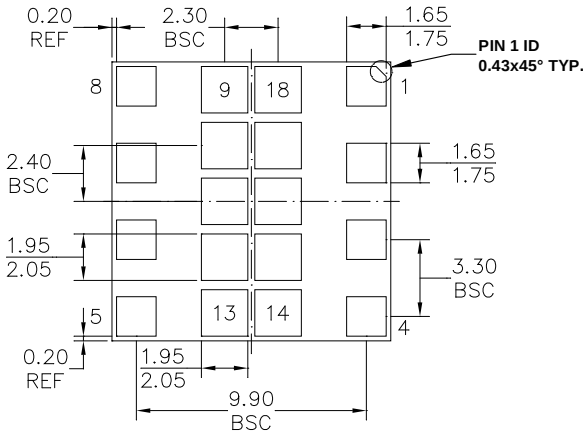

BOTTOM VIEW

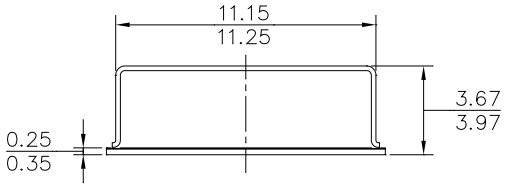

SIDE VIEW

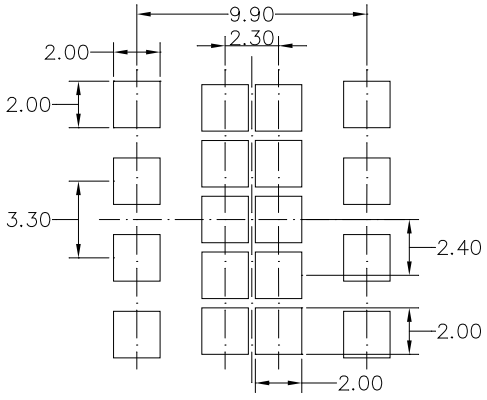

RECOMMENDED LAND PATTERN

NOTE:

1) ALL DIMENSIONS ARE IN MILLIMETERS.
2) DRAWING IS NOT TO SCALE.

MPS Proprietary Information. Patent Protected. Unauthorized Photocopy and Duplication Prohibited.
© 2022 MPS. All Rights Reserved.

CARRIER INFORMATION

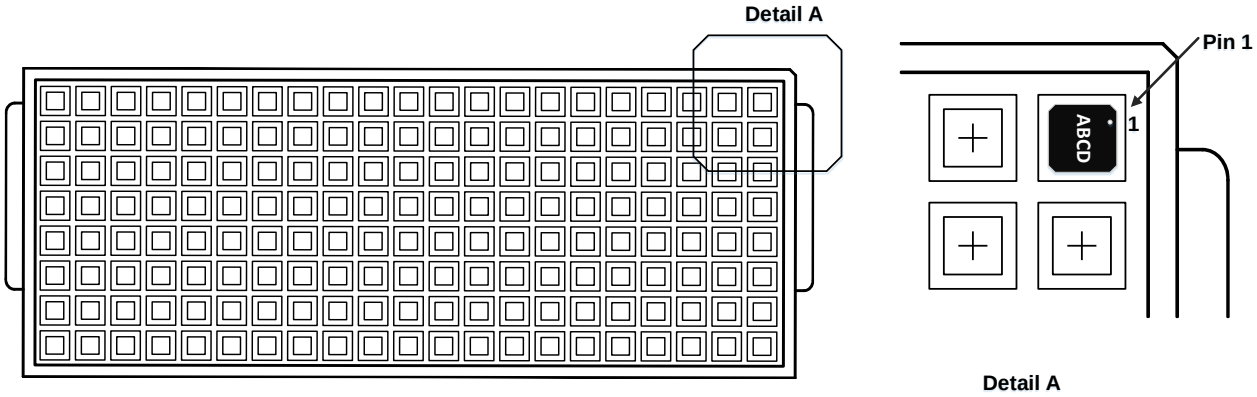

Note:

This is a schematic diagram of Tray. Different packages correspond to different trays with different length, width and height.

Part Number	Package Description	Quantity/ Reel	Quantity/ Tube	Quantity/ Tray	Reel Diameter	Carrier Tape Width	Carrier Tape Pitch
MPM3550EGLE	LGA-18 (12mmx12mmx3.82mm)	N/A	N/A	168	N/A	N/A	N/A

MPS Proprietary Information. Patent Protected. Unauthorized Photocopy and Duplication Prohibited.
© 2022 MPS. All Rights Reserved.

REVISION HISTORY

Revision #	Revision Date	Description	Pages Updated
1.0	3/26/2021	Initial Release	-
1.1	4/22/2022	Update height from 4.2mm to 3.82mm	1, 2, 3, 20, 21
		Add MSL rating	2
		Update Package Information	20
		Add Carrier Information section	21

Notice: The information in this document is subject to change without notice. Users should warrant and guarantee that third-party Intellectual Property rights are not infringed upon when integrating MPS products into any application. MPS will not assume any legal responsibility for any said applications.

MPS Proprietary Information. Patent Protected. Unauthorized Photocopy and Duplication Prohibited.
© 2022 MPS. All Rights Reserved.