APPROVAL SHEET

RFBPF Series – 2012(0805)- RoHS Compliance

MULTILAYER CERAMIC BAND PASS FILTER

Halogens Free Product

3300 ~ 4200 MHz Working Frequency

P/N: RFBPF20123G7W2T

*Contents in this sheet are subject to change without prior notice.

FEATURES

1. Miniature footprint: 2.0 X 1.25 X 0.7 mm^3
2. Low Insertion loss
3. High Rejection Rate
4. LTCC process

APPLICATIONS

1. 3300 ~ 4200 MHz working frequency

CONSTRUCTION

Top view

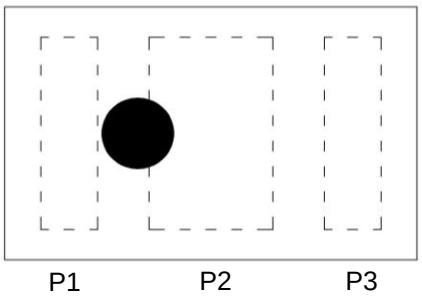

PIN	Connection
1	Input
2	GND
3	Output

DIMENSIONS

Figure	Symbol	Dimension (mm)
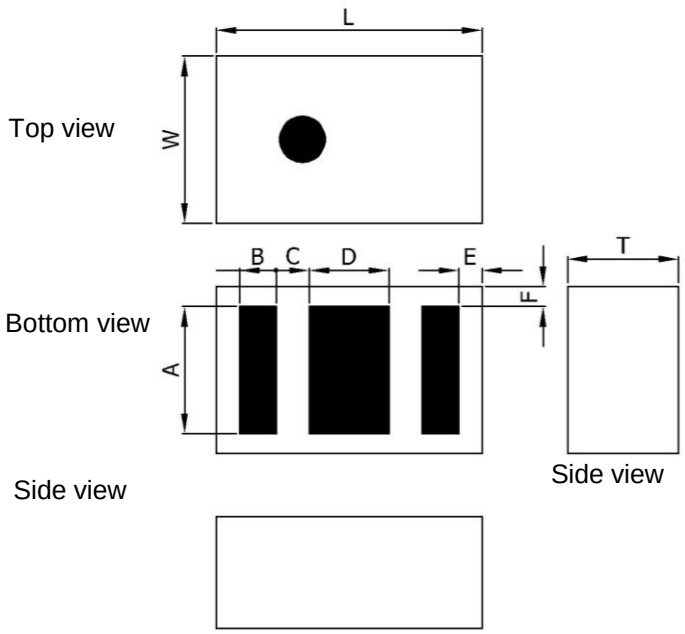	L	2.00 ± 0.15
	W	1.25 ± 0.10
	T	0.70 max.
	A	0.95 ± 0.10
	B	0.275 ± 0.10
	C	0.25 ± 0.05
	D	0.60 ± 0.10
	E	0.175 ± 0.10
	F	0.15 ± 0.10

ELECTRICAL CHARACTERISTICS

RFBPF20123G7W2T	Specification
Frequency Range	3300 ~ 4200 MHz
Insertion Loss (at +25 °C)	2.0 dB max. @ 3300~4200 MHz 2.0 dB max. @ 3300~3800 MHz 1.5 dB max. @ 3400~3800 MHz
Insertion Loss (at -40 ~ +85 °C)	2.25 dB max. @ 3300~3500 MHz 2.25 dB max. @ 3500~4200 MHz 2.25 dB max. @ 3300~3800 MHz 2.25 dB max. @ 3400~3800 MHz
Attenuation	36 dB min. @ 450~2200 MHz 38 dB min. @ 2300~2483 MHz 33 dB min. @ 2496~2690 MHz 25 dB min. @ 5150~5850 MHz 25 dB min. @ 6600~8400 MHz 15 dB min. @ 9900~12600 MHz 15 dB min. @ 13200~16800 MHz
VSWR	2.1 max.
Characteristics impedance	50 Ω
Power Capacity	2W max.
Moisture sensitivity levels	MSL is LEVEL 1 (Refer to : IPC/JEDEC J-STD-020)

Operating & Storage Condition (Component)

Operation Temperature Range: -40 ~ +85 ℃

Storage Temperature Range: -40 ~ +85 ℃

Storage Condition before Soldering (Included packaging material)

Storage Temperature Range: +5 ~ +40 ℃

Humidity: 30 to 70% relative humidity

Typical Electrical Chart

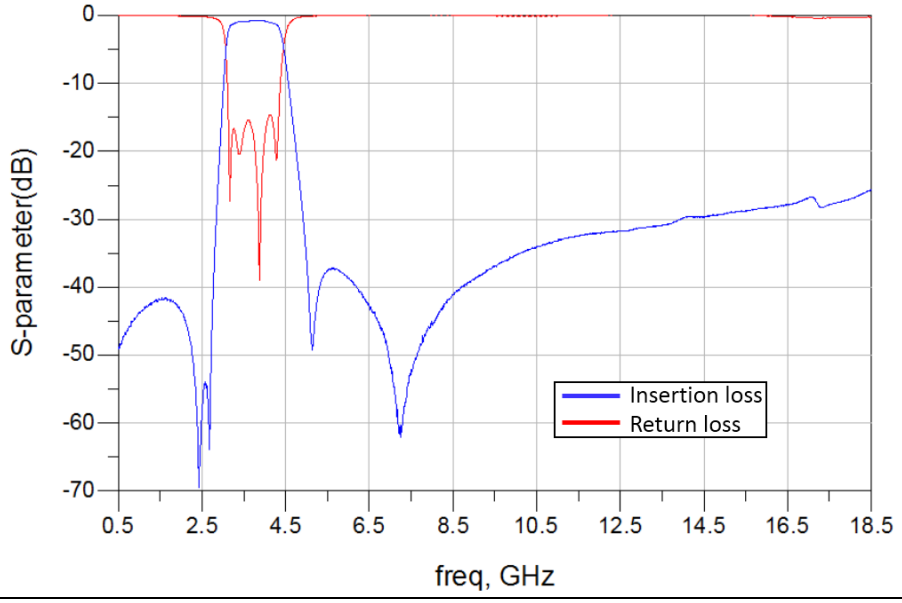

LAND PATTERN

Figure
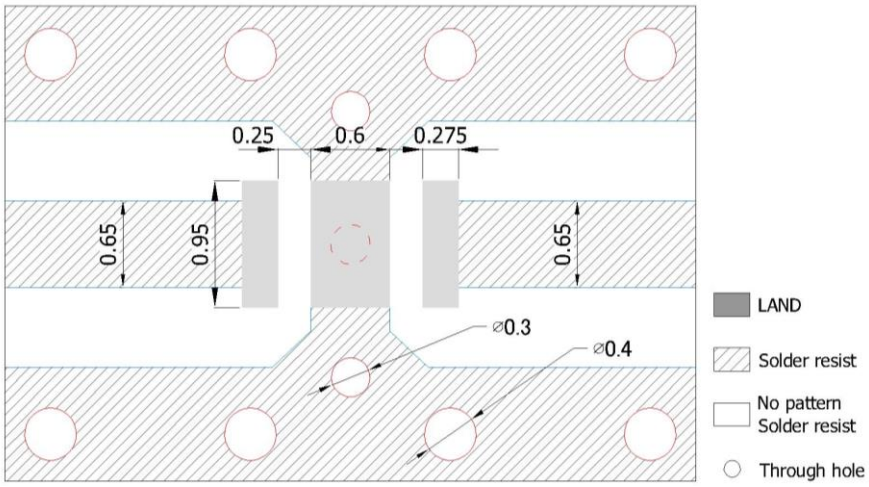
Unit : mm Line width to be designed to match 50 Ω characteristic impedance, depending on PCB material and thickness.

RELIABILITY TEST

Test item	Test condition / Test method	Specification
Solderability JIS C 0050-4.6 JESD22-B102D	*Solder bath temperature：235 ± 5°C *Immersion time：2 ± 0.5 sec Solder：Sn3Ag0.5Cu for lead-free	At least 95% of a surface of each terminal electrode must be covered by fresh solder.
Resistance to soldering heat JIS C 0050-5.4	*Preheating temperature：120~150°C, 1 minute. *Solder temperature：270±5°C *Immersion time：10±1 sec Solder：Sn3Ag0.5Cu for lead-free Measurement to be made after keeping at room temperature for 24±2 hrs	No mechanical damage. Electrical specification shall satisfy the descriptions in electrical characteristics under the operational temperature range within -40 ~ 85°C. Loss of metallization on the edges of each electrode shall not exceed 25%.
Drop Test JIS C 0044 Customer's specification.	*Height：75 cm *Test Surface：Rigid surface of concrete or steel. *Times：6 surfaces for each units；2 times for each side.	No mechanical damage. Electrical specification shall satisfy the descriptions in electrical characteristics under the operational temperature range within -40 ~ 85°C.
Vibration JIS C 0040	*Frequency：10Hz~55Hz~10Hz(1min) *Total amplitude：1.5mm *Test times：6hrs.(Two hrs each in three mutually perpendicular directions)	No mechanical damage. Electrical specification shall satisfy the descriptions in electrical characteristics under the operational temperature range within -40 ~ 85°C.
Adhesive Strength of Termination JIS C 0051- 7.4.3	*Pressurizing force： 5N (LGA terminal series)；5N(≦0603)；10N(>0603) *Test time：10±1 sec	No remarkable damage or removal of the termination.
Bending test JIS C 0051- 7.4.1	The middle part of substrate shall be pressurized by means of the pressurizing rod at a rate of about 1 mm/s per second until the deflection becomes 1mm/s and then pressure shall be maintained for 5±1 sec. Measurement to be made after keeping at room temperature for 24±2 hours	No mechanical damage. Electrical specification shall satisfy the descriptions in electrical characteristics under the operational temperature range within -40 ~ 85°C.

Temperature cycle JIS C 0025	1. 30±3 minutes at -40°C±3°C, 2. 10~15 minutes at room temperature, 3. 30±3 minutes at +85°C±3°C, 4. 10~15 minutes at room temperature, Total 100 continuous cycles Measurement to be made after keeping at room temperature for 24±2 hrs	No mechanical damage. Electrical specification shall satisfy the descriptions in electrical characteristics under the operational temperature range within -40 ~ 85°C.
High temperature JIS C 0021	*Temperature：85°C±2°C *Test duration：1000+24/-0 hours Measurement to be made after keeping at room temperature for 24±2 hrs	No mechanical damage. Electrical specification shall satisfy the descriptions in electrical characteristics under the operational temperature range within -40 ~ 85°C.
Humidity (steady conditions) JIS C 0022	*Humidity：90% to 95% R.H. *Temperature：40±2°C *Time：1000+24/-0 hrs. Measurement to be made after keeping at room temperature for 24±2 hrs ※ 500hrs measuring the first data then 1000hrs data	No mechanical damage. Electrical specification shall satisfy the descriptions in electrical characteristics under the operational temperature range within -40 ~ 85°C.
Low temperature JIS C 0020	*Temperature：-40°C±2°C *Test duration：1000+24/-0 hours Measurement to be made after keeping at room temperature for 24±2 hrs	No mechanical damage. Electrical specification shall satisfy the descriptions in electrical characteristics under the operational temperature range within -40 ~ 85°C.

SOLDERING CONDITION

Typical examples of soldering processes that provide reliable joints without any damage are given in Fig 2,

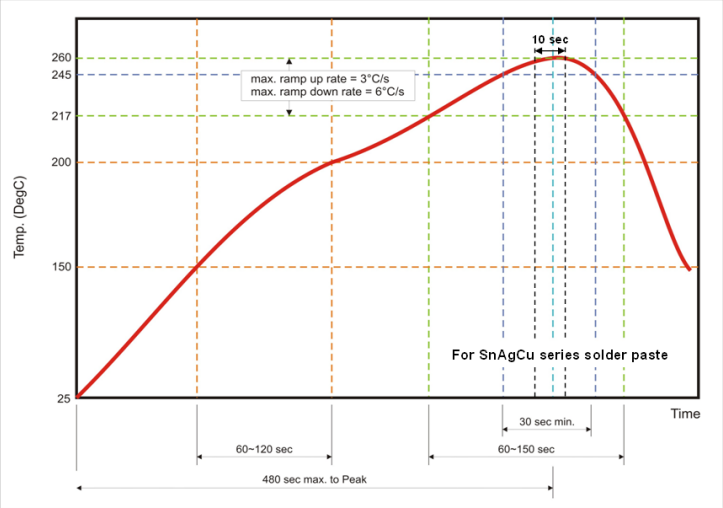

Fig 2. Infrared soldering profile

ORDERING CODE

RF	BPF	2012	3G7	W	2	T
Walsin RF device	**Product Code** BPF : Band Pass Filter	**Dimension code** Per 2 digits of Length, Width, e.g. : 2012= Length 2.0 mm, Width 1.2 mm,	**Central Frequency** 3G7 : 3.7 GHz	**Application** W: Wi-Max	**Specification** Design code	**Packing** T:Reeled

Minimum Ordering Quantity: 2000 pcs per reel.

PACKAGING

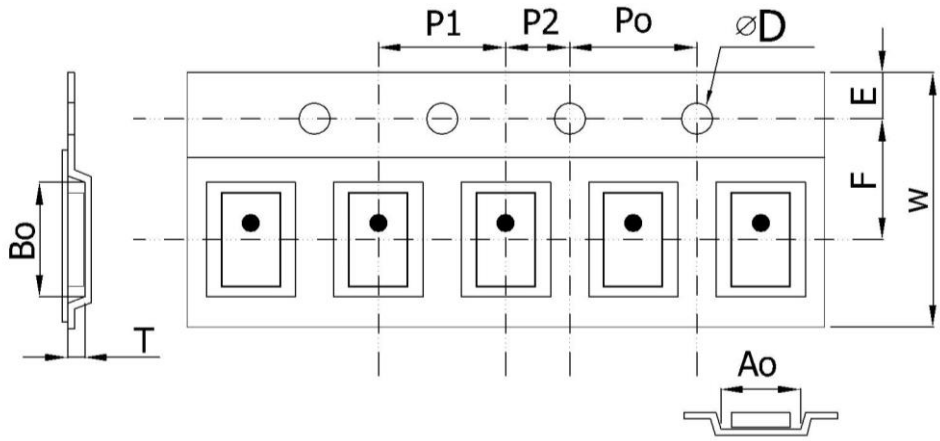

Plastic Tape specifications (unit :mm)

Index	Ao	Bo	ΦD	T	W
Dimension (mm)	1.40 ± 0.10	2.25 ± 0.10	1.55 ± 0.05	0.75 ± 0.10	8.00 ± 0.10
Index	E	F	Po	P1	P2
Dimension (mm)	1.75± 0.10	3.50 ± 0.05	4.00 ± 0.10	4.00 ± 0.10	2.00 ± 0.05

Reel dimensions

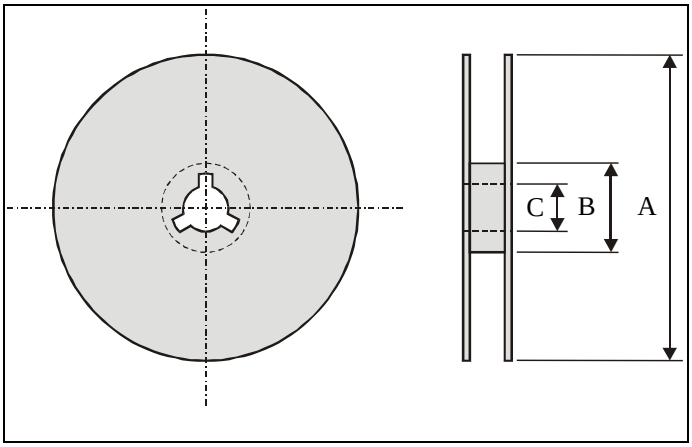

Index	A	B	C
Dimension (mm)	Φ178.0	Φ60.0	Φ13.0

Taping Quantity:2000 pieces per 7" reel

CAUTION OF HANDLING

Limitation of Applications

Please contact us before using our products for the applications listed below which require especially high reliability for the prevention of defects, which might directly cause damage to the third party's life, body or property.

(1) Aircraft equipment
(2) Aerospace equipment
(3) Undersea equipment
(4) Medical equipment
(5) Disaster prevention / crime prevention equipment
(6) Traffic signal equipment
(7) Transportation equipment (vehicles, trains, ships, etc.)
(8) Applications of similar complexity and /or reliability requirements to the applications listed in the above.

Storage condition

(1) Products should be used in 6 months from the day of WALSIN outgoing inspection.

(2) Storage environment condition.

- Products should be storage in the warehouse on the following conditions.
- Temperature : +5 to +40℃
- Humidity : 30 to 70% relative humidity
- Don't keep products in corrosive gases such as sulfur. Chlorine gas or acid or it may cause oxidization of electrode, resulting in poor solderability.
- Products should be storage on the palette for the prevention of the influence from humidity, dust and son on.
- Products should be storage in the warehouse without heat shock, vibration, direct sunlight and so on.
- Products should be storage under the airtight packaged condition.