MCDP6000 (ASTON)

USB Type-C DP Alt-mode Switching Retimer

Kinetic Technologies cannot assume responsibility for use of any circuitry other than circuitry entirely embodied in a Kinetic Technologies product. No intellectual property or circuit patent licenses are implied. Kinetic Technologies reserves the right to change the circuitry and specifications without notice at any time.

Table of Contents

1. Features 3
2. Outline 4
3. System Diagram 5
4. Power Distribution Diagram 6
5. Application Block Diagram 7
6. RD4 Board Description 8
6.1. Board Picture 8
6.2. Getting Started 10
6.2.1. Typical Connection 10
6.3. Description 11
6.3.1. Overview 11
6.3.2. Main Power Switch 12
6.3.3. Main Power LED 13
6.3.4. I2C Interface(3pin) 14
6.3.5. SWD I/F for NXP 15
6.3.6. DC 5V+-10% Input, >3A 16
6.3.7. CPU Reset 16
6.3.8. Status LED Indicator 16
6.3.9. GProbe I/F 17
6.3.10. User Switch 17
6.3.11. UFP Type-C (USB Only) 17
6.3.12. Board Serial Number 17
6.3.13. VBUS decoupling capacitor 18
6.3.14. Orientation LED 18
6.3.15. DP Input Connector 18
6.3.16. DFP Type-C Connector 18
6.3.17. AUX Monitor 19
6.3.18. Type-C Monitor 20
6.3.19. 5V Power Outlet/Input 21
6.3.20. J-Link 19pin JTAG I/F 22
6.3.21. REF_IN 23
6.3.22. REF_OUT 24
6.4. Display Definition of Status LEDs 25
6.5. Frame Ground 26
6.6. PCB Design 27
6.6.1. PCB Stack-up Specification 27
6.6.2. Design Materials 27
7. Recommended Accessories 28
7.1. AC Adapters 28
7.2. Cables 29

1. Features

Full functionality of MCDP6000 Type-C DP Alt-mode Switching Retimer
MCDP9000 USB Type-C Port Controller + MCU(NXP LPC1549JBD64 + Firmware)

Form factor: 48mm x 69mm
Material: FR4 t=1.6mm, 6 layers

1x Type-C Connector for USB Input
1x Full size Display Port Connector for Display Port Input
1x Type-C Connector for DP Alt mode support USB Type-C at DFP(Downstream Facing Port)
1x U.FL(Hirose) External Clock input
1x U.FL(Hirose) Clock output for external device

1x Power Slide Switch for the system power
1x Power Supply: DC+5V Input (Alternate input barrel plug or Type-C Connector)
** VBUS in the USB Input at UFP can be used as an external power supply for this system. (Default: Disabled)

1x MCU Reset button
1x USB Micro-B (Communication to the MCU)

1x Type-C at UFP Polarity Detection Indicator(LED)

[Debug Connectors]
1x Display Port AUX Channel Monitor pins at DP Input
1x CC Communication & SBU Signal Monitor pins at DFP Type-C
1x I2C Interface pins (this net is connected to MCU(as I2C master) and MCDP6000(as I2C slave)
1x GPIOx4 pins from MCDP6000
1x SWD(Single Wire Debug) Interface for J-Link debugger

2. Outline

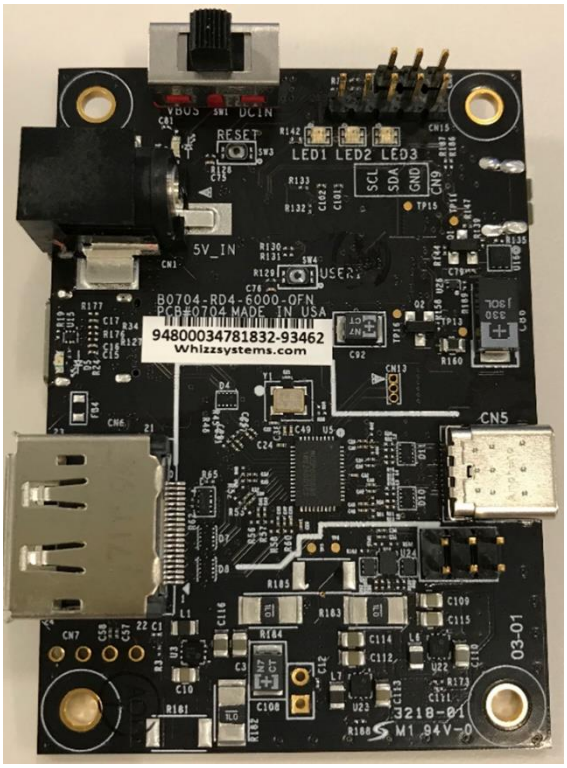

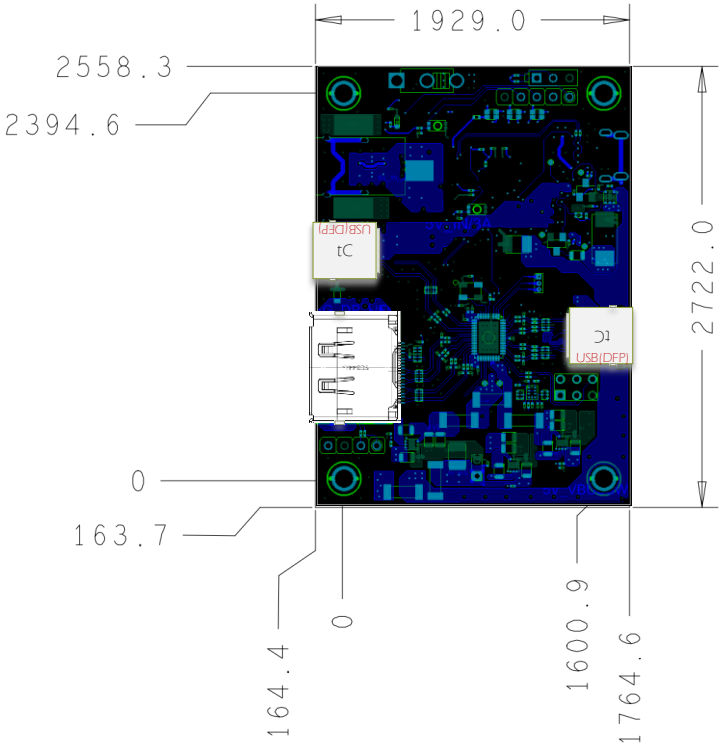

Figure 2-1. Dimensions (mil)

3. System Diagram

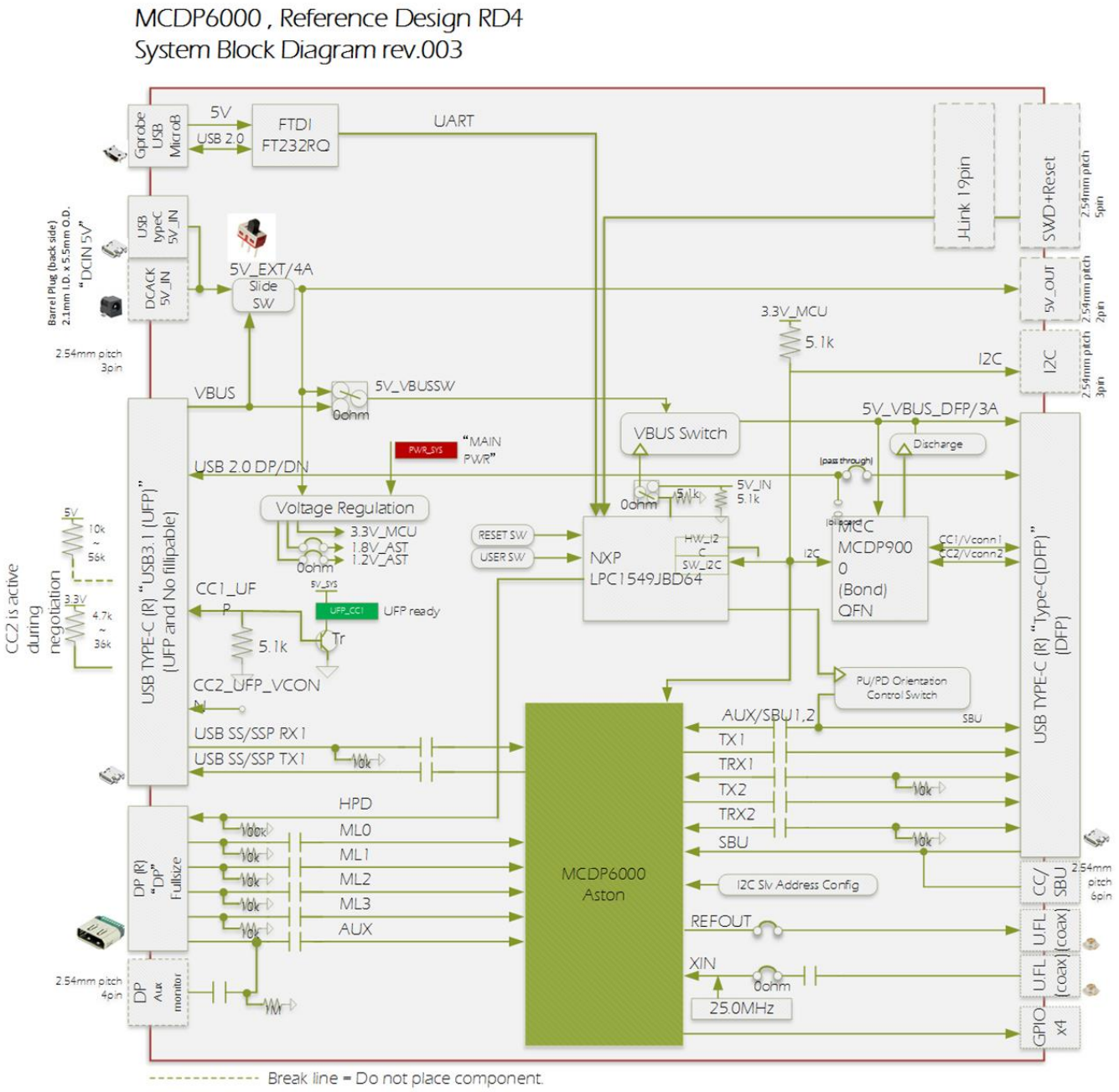

Figure 3-1. System Block Diagram

4. Power Distribution Diagram

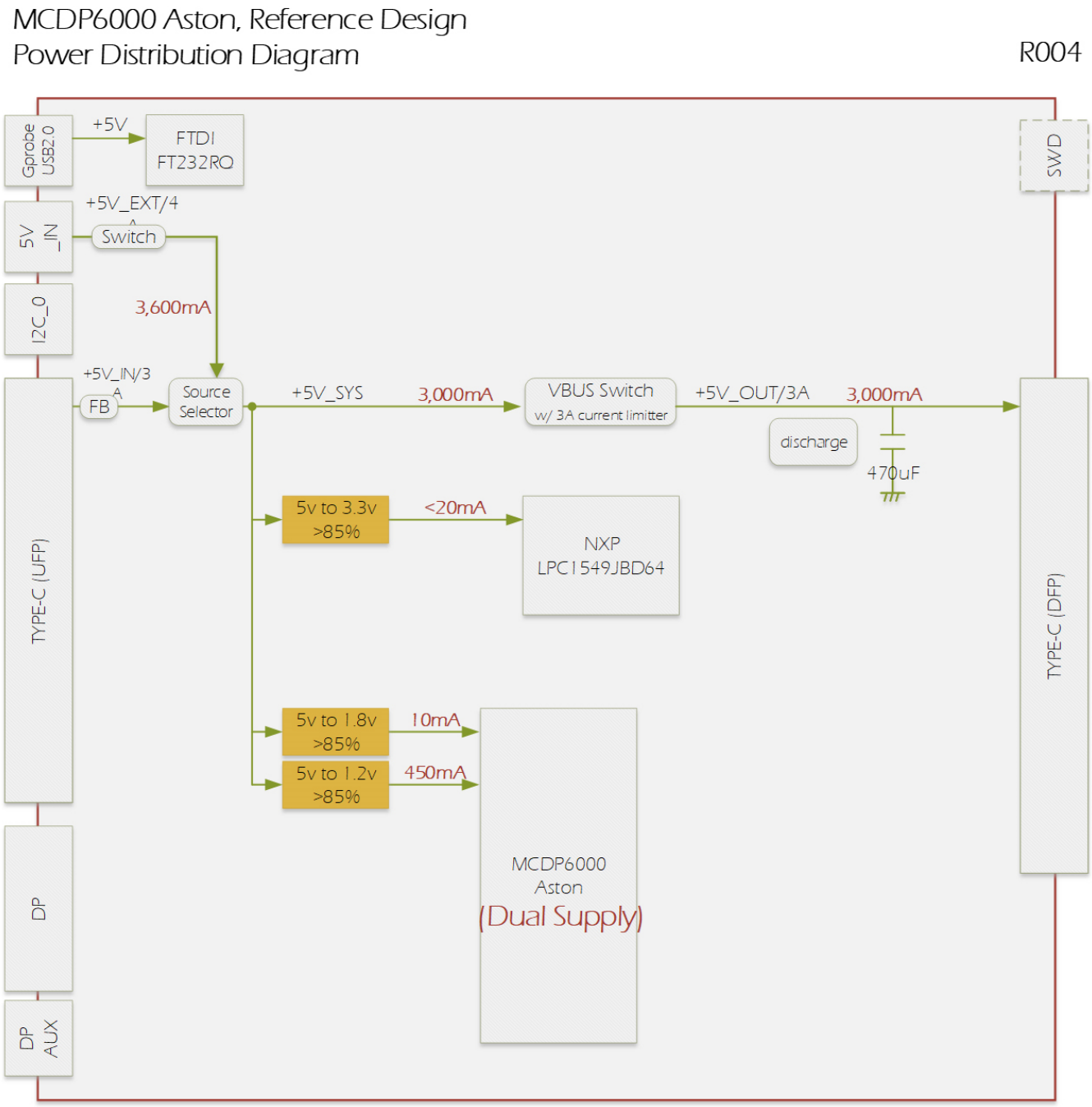

Figure 4-1. Power Distribution Diagram

5. Application Block Diagram

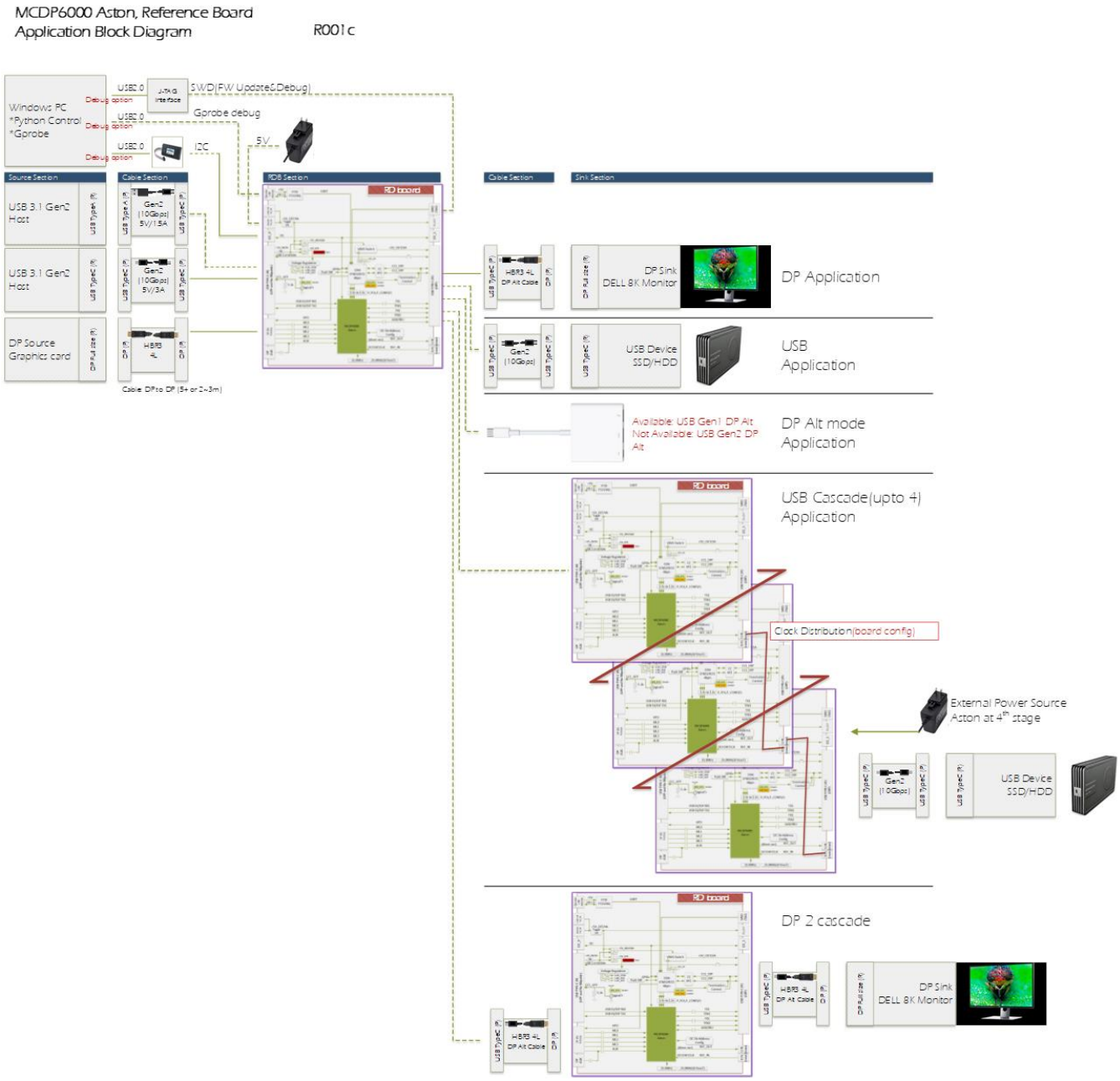

Figure 5-1. Application Block Diagram

6. RD4 Board Description

6.1. Board Picture

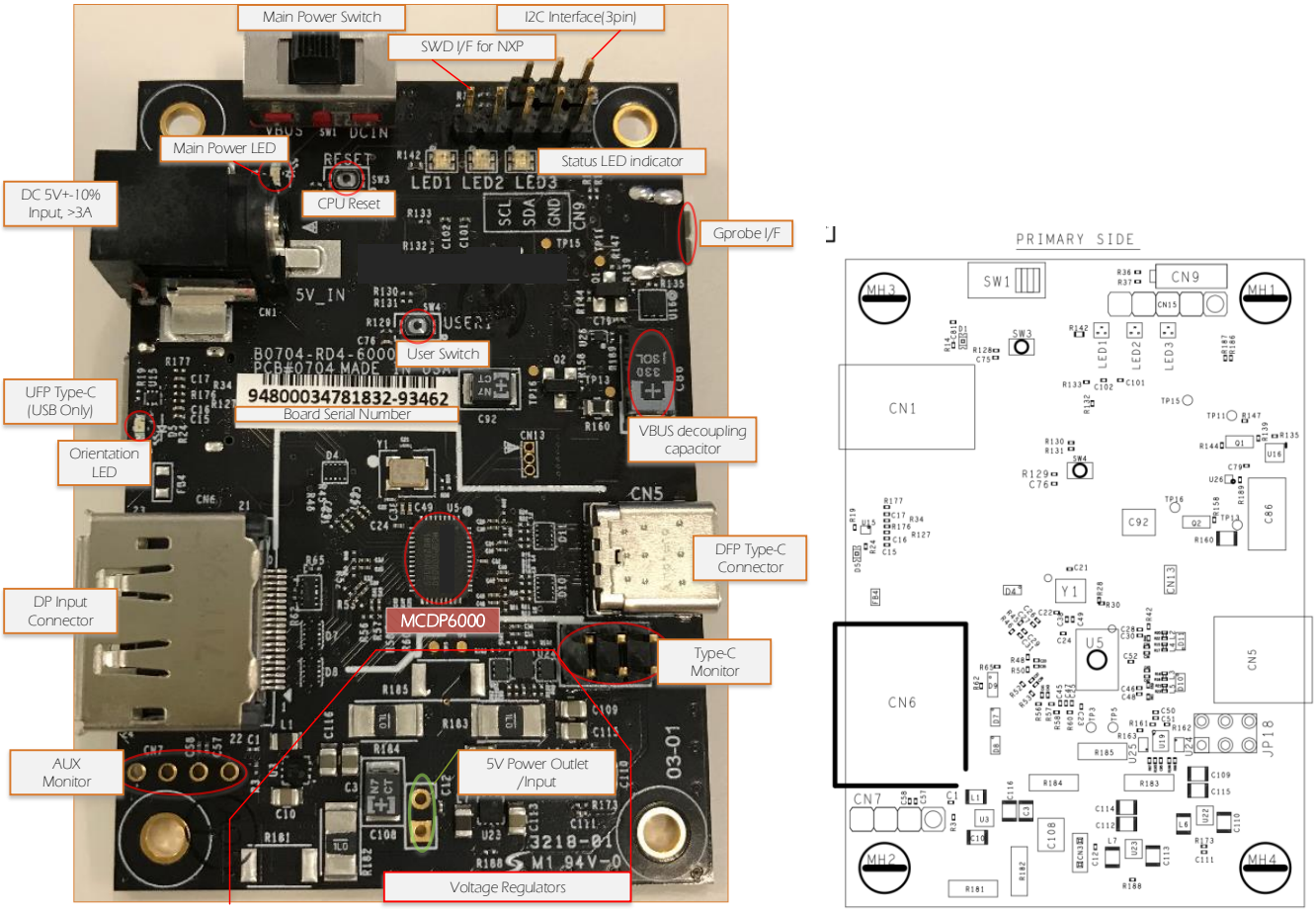

Figure 6-1. RD4-6000 Board Picture (Top Side)

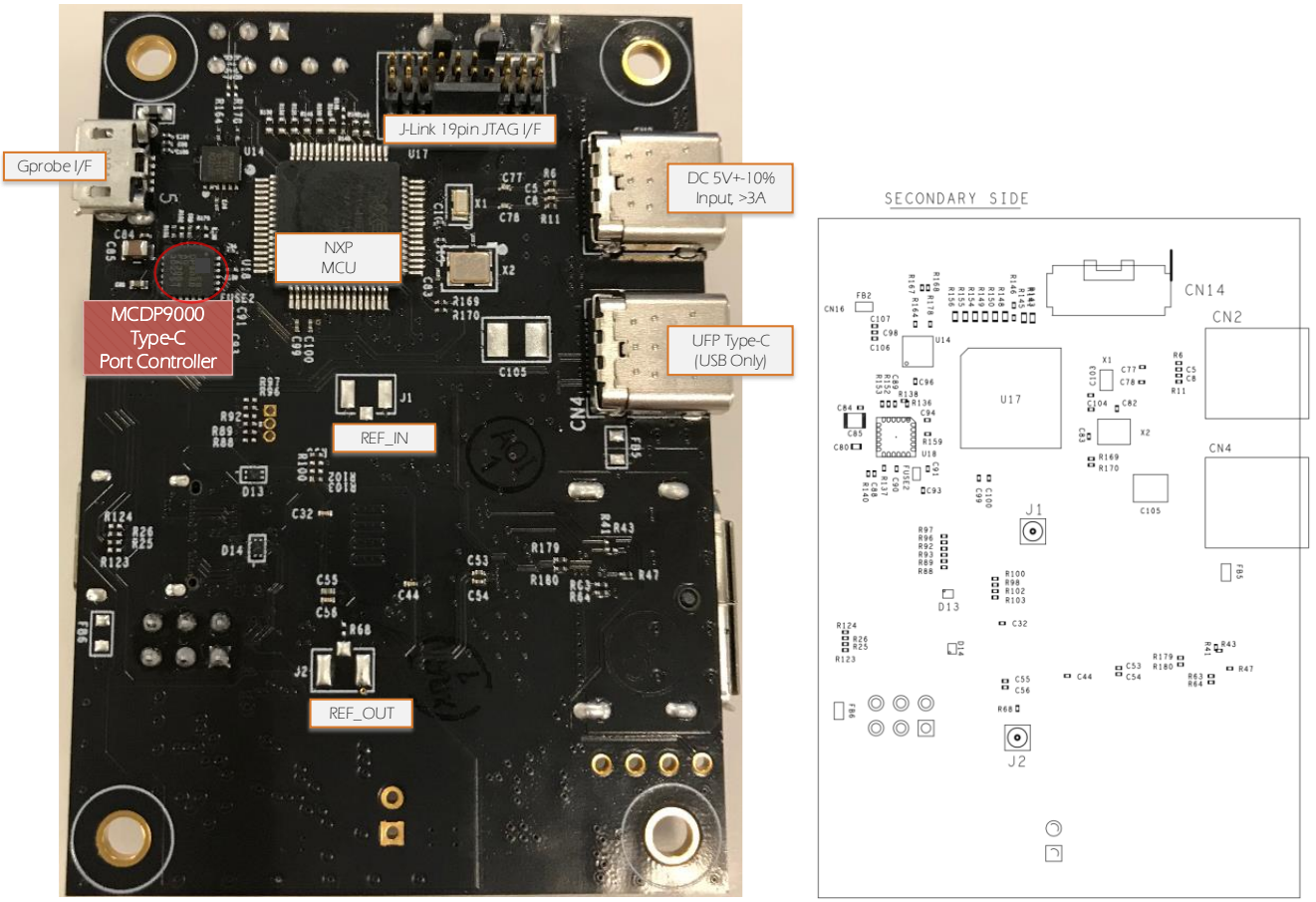

Figure 6-2. RD4-6000 Board Picture (Bottom Side)

6.2. Getting Started

6.2.1. Typical Connection

It's recommended to use AD Adapter for stably powering USB devices such a HDD drive etc.
If you're using USB host controller with Type-C connector which has Vconn, you may find the proper cable orientation easily (Green LED turns on).

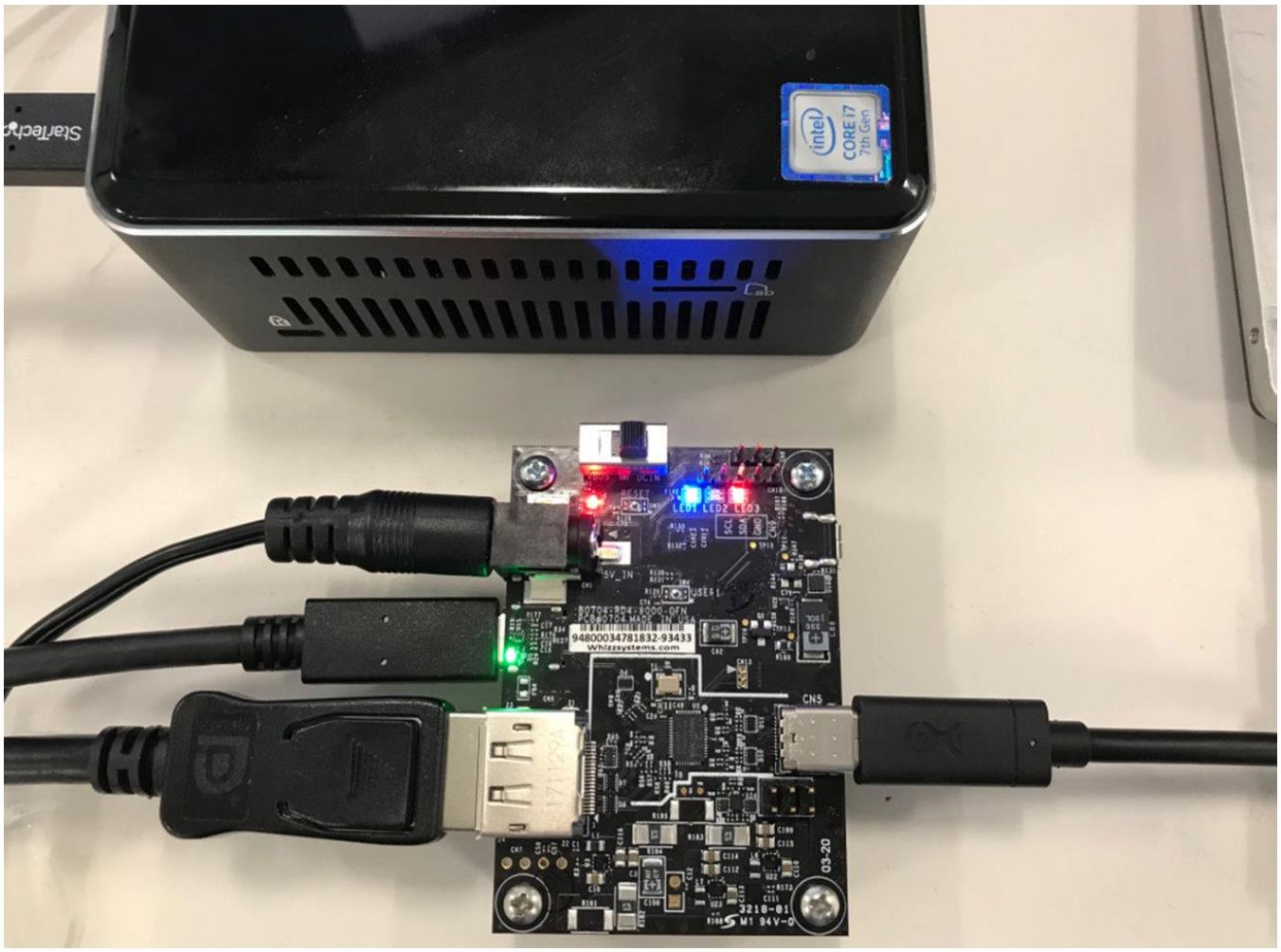

6.3. Description

6.3.1. Overview

Table 6.3-1. Board Descriptions

Label	Description	Symbol #
Main Power Switch	5V main power supply selector. “VBUS”: Use VBUS on UFP Type-C connector as power source. “DCIN”: Use DC 5V+-10% input as power source. “Center position”: System turned off.	SW1
Main Power LED	Turns on if the main power source 5V is fed.	D1
I2C Interface(3pin)	Connect I2C interface network. 3.3V I/O. This net is shared line with Master (MCU) and Slave (MCDP6000). MCDP6000 register can be overwritten through this interface.	CN9
SWD I/F for NXP	SWD (Single Wire Debugger) signal interface. These net are shared with “J-Link 19pin JTAG I/F” as below. This can be also used for firmware upgrade.	CN15
DC 5V+-10% Input, >3A	DC Barrel Jack & Type-C connector underneath the barrel jack connector for main power supply. This path is enabled with “DCIN” of Main Power Switch.	CN1 or CN2
CPU Reset	Make MCU reset. NRST of MCU.	SW3
Status LED Indicator	Three RGB LED controlled by MCU.	LED1/2/3
GProbe I/F	USB2.0 interface for GProbe control.	CN16
User Switch	Connected to MCU for future use.	SW4
UFP Type-C (USB Only)	Connect to Host PC. VBUS,USB SS/SSP, 2.0 are available. No flipping capability. Check if the “Orientation LED” is turned on when Type-C to Type-C connecter is used. Not for Type-A to Type-C connector due to Vconn is not available for indication.	CN1
Board Serial Number	Unique number for the board.	
VBUS decoupling capacitor	Decoupling capacitor for VBUS. This helps IR drop due to rush current of USB Devices (bus-powered HDD/SSD and some of highspeed USB memory)	C86
Orientation LED	In case of Type-C & Type-C cable connection, this LED is turned on if the orientation is correct. Not for Type-A & Type-C cable	D5
DP Input Connector	Connect to DP Source	CN6
DFP Type-C Connector	Connect to DP Sink via DP Alt mode cable. Be aware of the cable quality.	CN5
AUX Monitor	To monitor the AUX transaction of DP_RX	CN7
Type-C Monitor	To monitor the AUX transaction of DP_TX or USB PD communication with VBUS.	JP18
5V Power Outlet/Input	5V Power outlet for external devices. Keep the voltage 5V+-10% in case of power input. And current delivery performance is shared with main power supply from an external power input 5V or power from UFP Type-C USB connector. Have enough current rating of external power supply. Also, this can be used for external power input pin.	CN3
J-Link 19pin JTAG I/F	SWD(JTAG) interface for J-Link 19pin cable	CN14
REF_IN	External reference clock input to MCDP6000	J1
REF_OUT	Reference clock output from MCDP6000	J2

6.3.2. Main Power Switch

5V main power switch for the board. Power source can be selected from external power supply “DC 5V+-10% Input, >3A” or embedded VBUS 5V in UFP Type-C USB connector. i.e: Use ‘DC 5V’(right side) when you’re using external AC adapter with barrel jack or Type-C adapter.

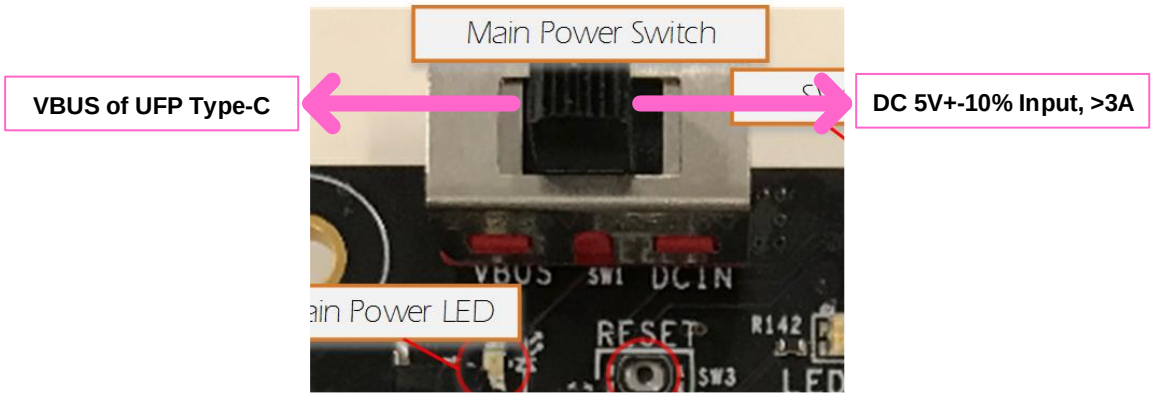

Figure 6-3. Main Power Switch

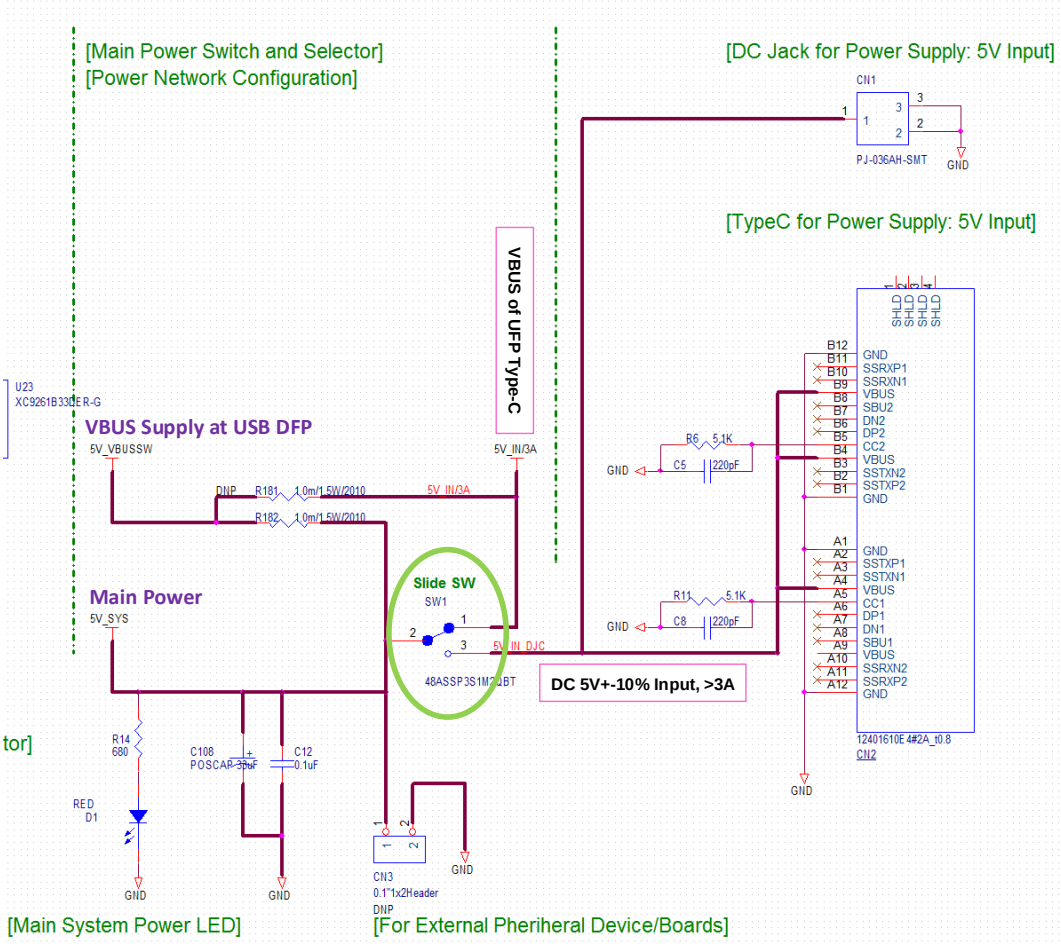

Figure 6-4. Circuit for Main Power Switch

6.3.3. Main Power LED

This LED turns on if main power 5V is suuplied.

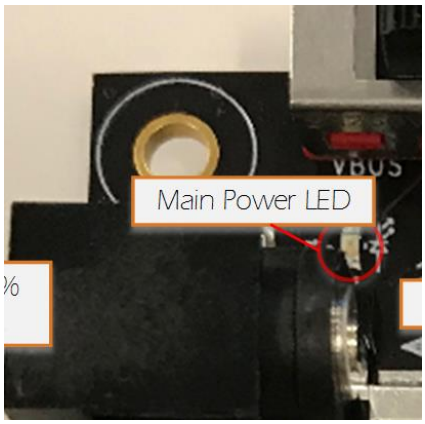

Figure 6-5. Main Power LED

6.3.4. I2C Interface(3pin)

This interface pin provides the register programming to MCDP6000 through external I2C Host Interface. (i.e Aardvark I2C/SPI host interface, https://www.totalphase.com/products/aardvark-i2cspi/).

And the I2C slave address of MCDP6000 can be changed as board option as below. Note: Firmware can recognize only the default value of board. If you change the slave address of MCDP6000, firmware need to be rebuild.

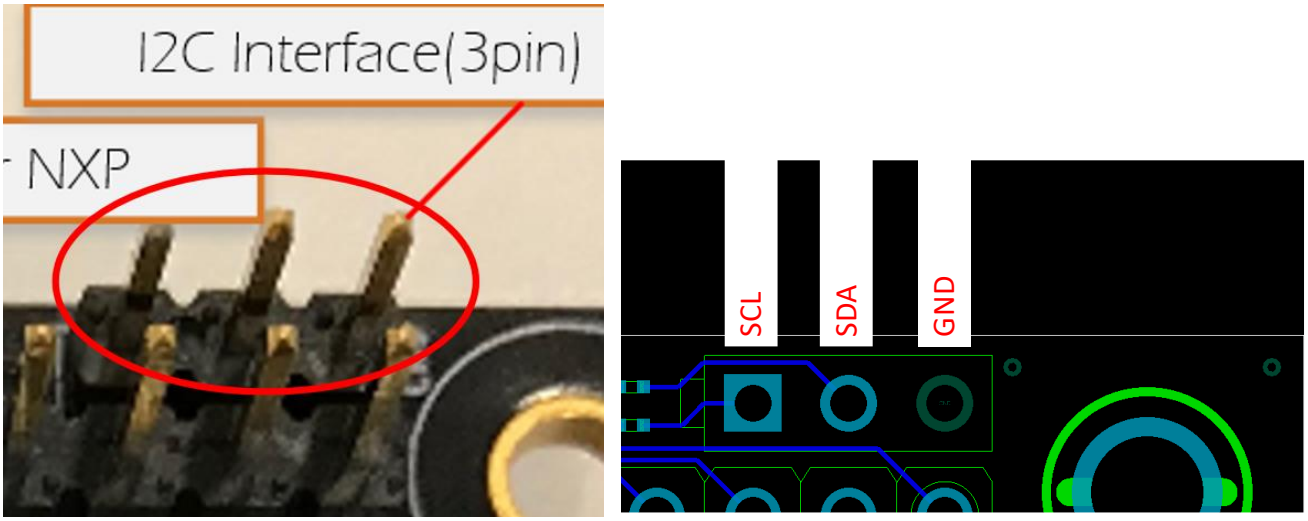

Figure 6-6. Pin Assignment of I2C Interface

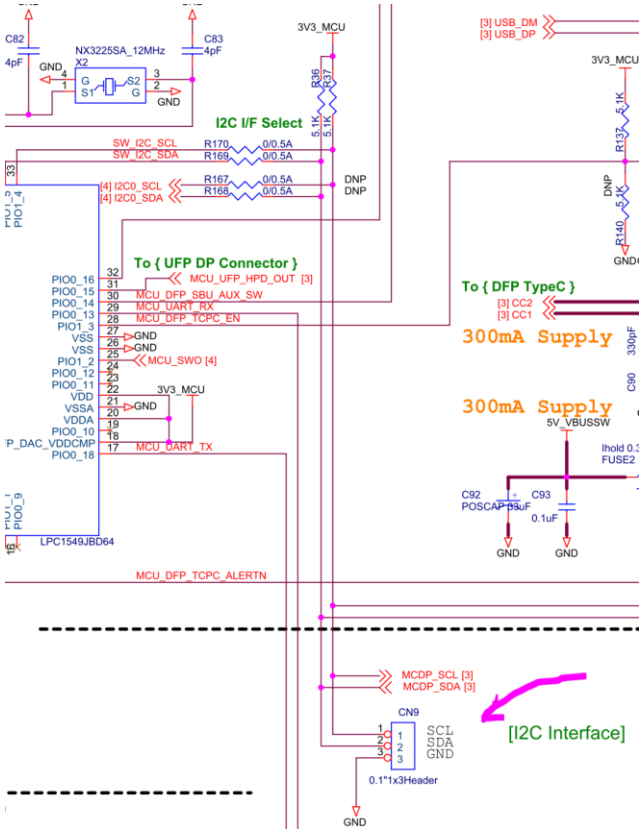

Figure 6-7. I2C Interface (CN9)

6.3.5. SWD I/F for NXP

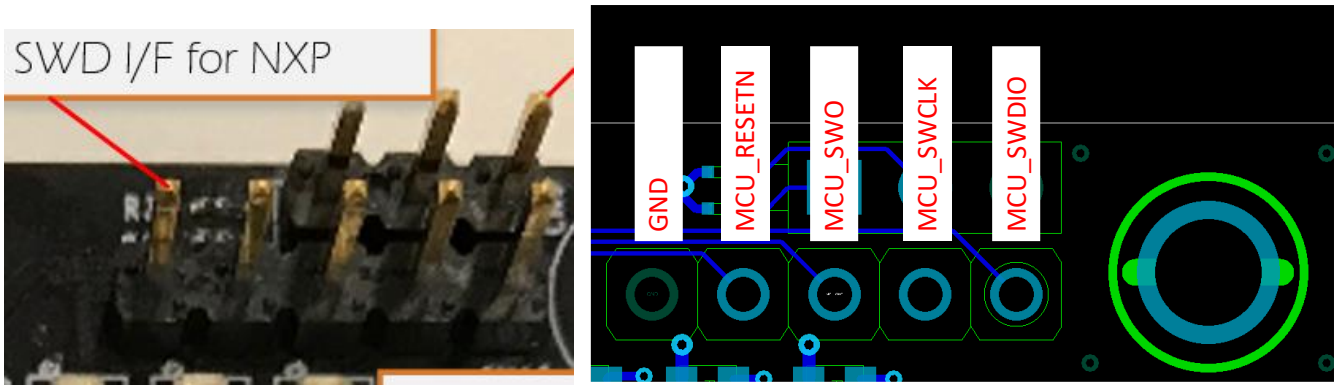

Figure 6-8. Pin Assignment of SWD I/F for NXP

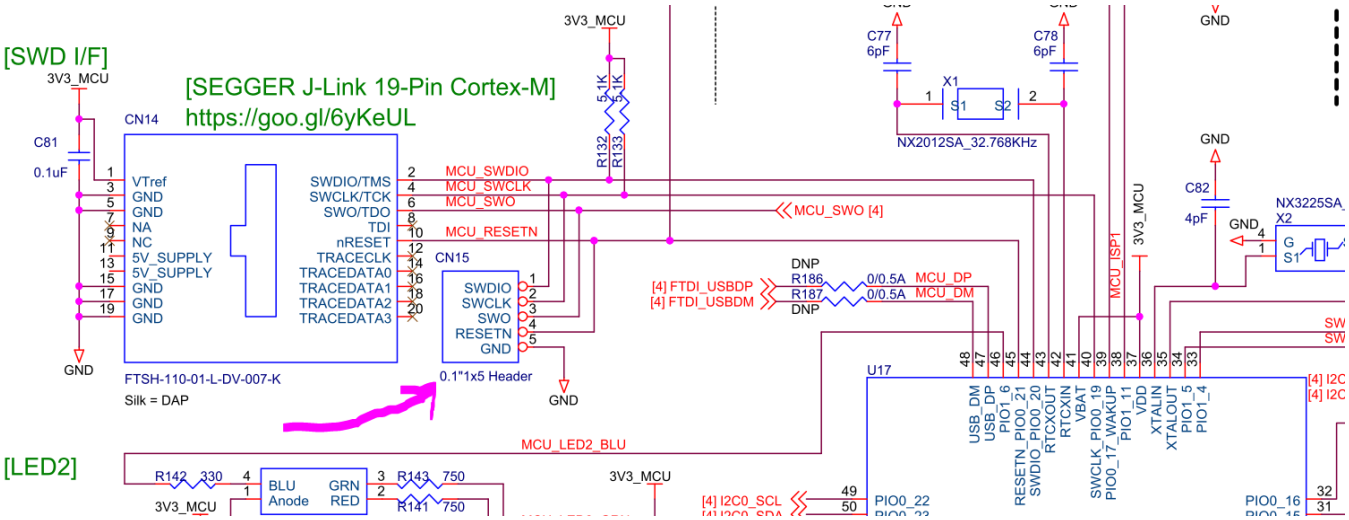

Figure 6-9. Circuit for SWD I/F (CN15)

6.3.6. DC 5V+-10% Input, >3A

External power supply input for the board. There's two general input "barrel receptacle" and "Type-C connector" underneath of this barrel plug.

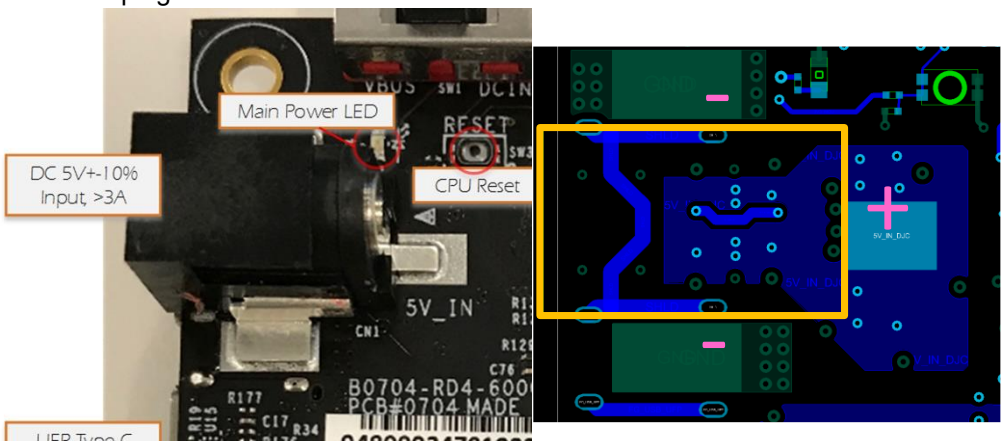

Figure 6-10. Pin Assignment of 6.2.5. DC 5V+-10% Input, >3A

6.3.7. CPU Reset

Assert the reset signal to MCU.

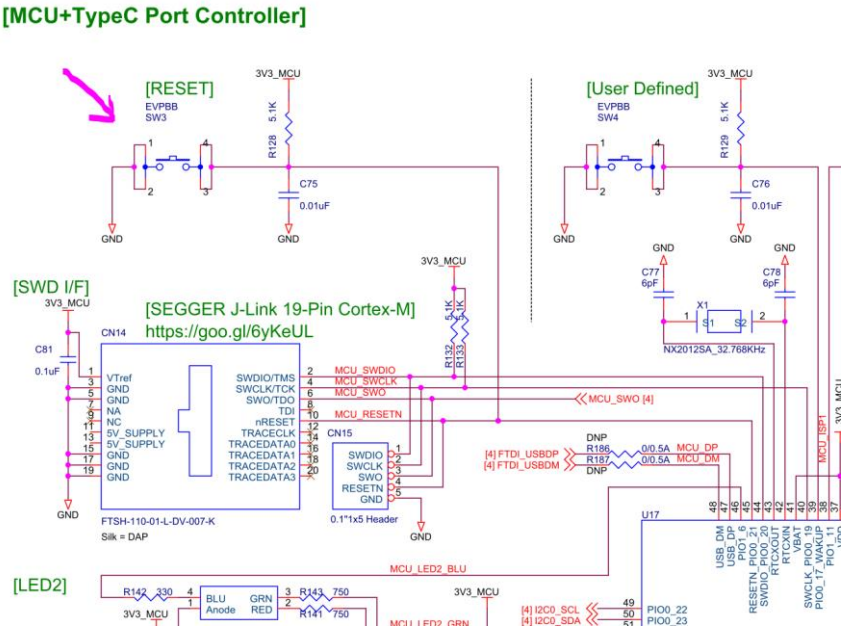

Figure 6-11. Circuit for CPU Reset

6.3.8. Status LED Indicator

These RGB-LED shows the system status. Please see the detail in next chapter.

6.3.9. GProbe I/F

GProbe interface connection. (FTDI USB Serial Device to MCU UART). Please see GProbe interface specification for detail.

6.3.10. User Switch

TBD.
This switch is connected to MCU. No functions have been implemented yet.

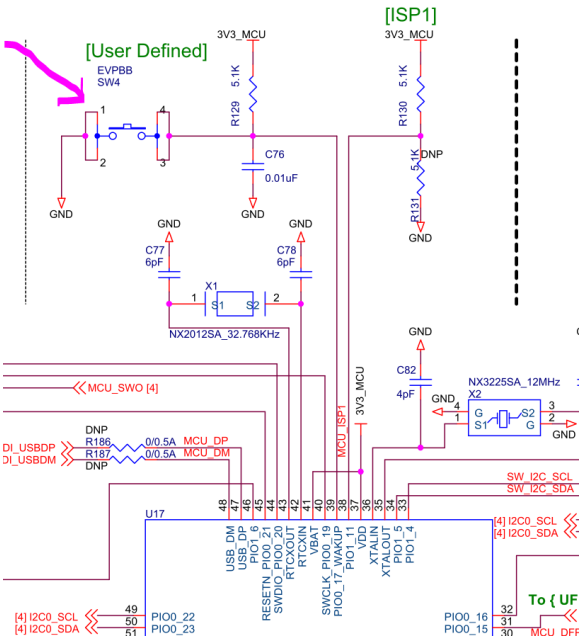

Figure 6-12. Circuit for User Switch

6.3.11. UFP Type-C (USB Only)

This is UFP Type-C USB. Though, this does not have a flipping capability. Users need to identify the orientation for proper connection. The “Orientation LED” can help to identify the proper orientation in case of Type-C to Type-C connection which has Vconn. Note: This LED uses Vconn power as power source. And this never turns on if Type-A to Type-C cable connection due to no Vconn present.

6.3.12. Board Serial Number

Unique number for each board.

6.3.13. VBUS decoupling capacitor

This capacitor helps to improve IR drop caused by rush current of USB bus-powered devices such a HDD/SSD. It rarely happens and cases unstable USB link establishment when USB bus powered device are connected if the capacitance is not enough to prevent the IR drop.
However, the capacitance value on this board is probably enough to operate the bus powered 2.5” HDD/SSD with Gen2 operation. Please consider this value carefully on your board and check if this IR drop within range of VBUS voltage requirement in any case.

Note: This board is able supply up to 3A with the limit of external power supply. If it goes over 3A, the protection circuit activates and shut off the VBUS current completely.

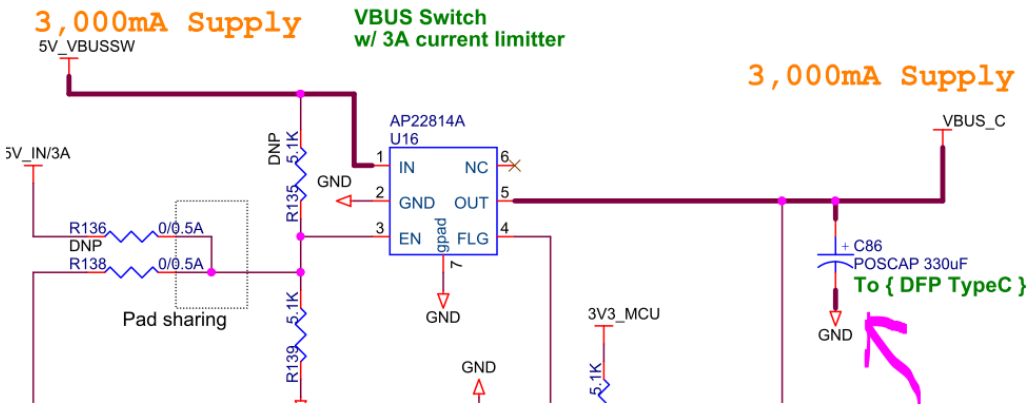

Figure 6-13. VBUS decoupling capacitor

6.3.14. Orientation LED

This USB UFP of this boards does not have flipping capability. This LED helps to know the proper orientation in case of Vconn presents.
Note: This does not work on Type-A to Type-C cable due to no Vconn present in the cable.

6.3.15. DP Input Connector

Connect to DP Source.

6.3.16. DFP Type-C Connector

Connect to DP Sink or USB Devices.

6.3.17. AUX Monitor

0.1” (2.54mm) pitch pin header can be soldered. These signals are AC coupled signal (No DC level) with 0.1uF capacitor.

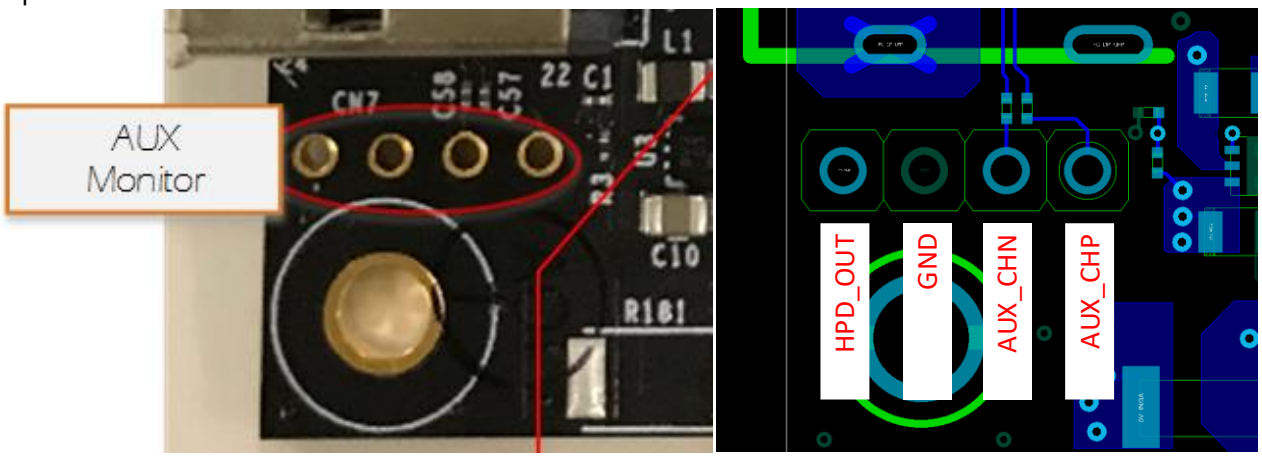

Figure 6-14. UFP DP(DP_RX), Pin assignment of Aux monitor

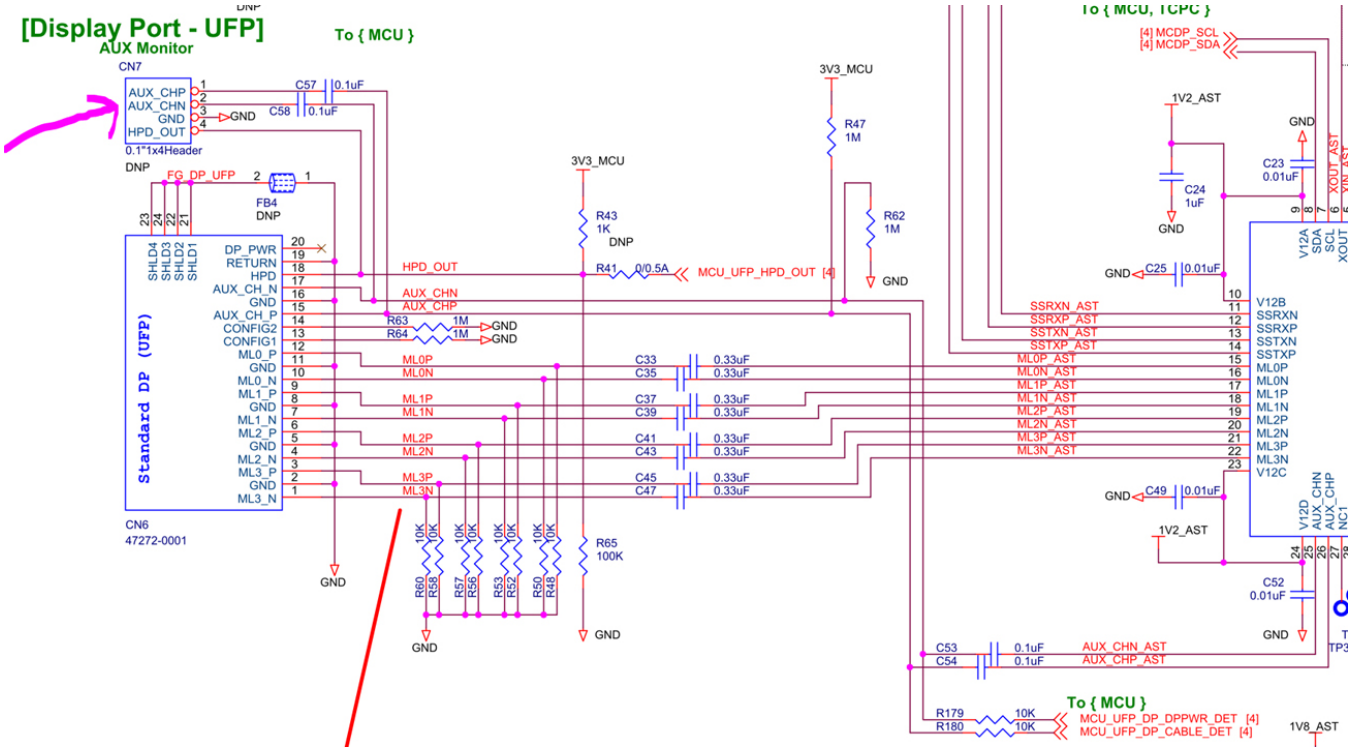

Figure 6-15. Circuit for AUX Monitor

6.3.18. Type-C Monitor

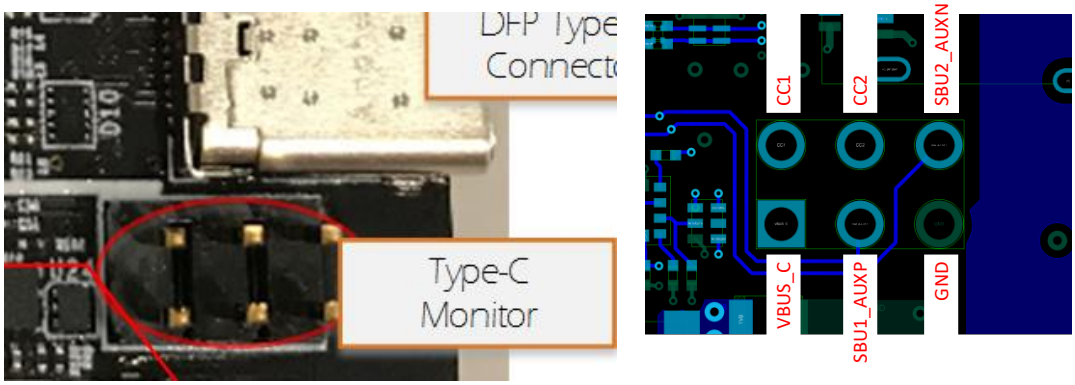

Figure 6-16. DFP USB Type-C Monitor Pin Assignment

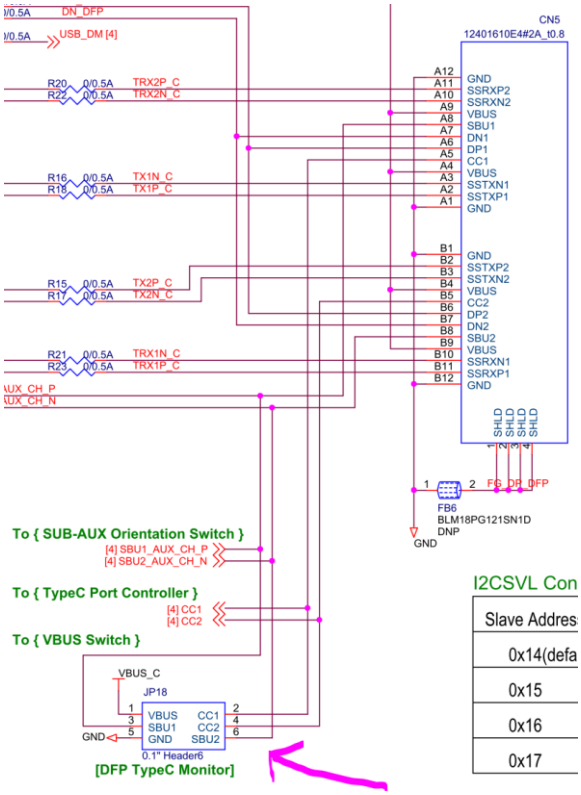

Figure 6-17. Circuit for Type-C Monitor

6.3.19. 5V Power Outlet/Input

This power outlet/input is bidirectional. It can be used for an external power supply unit or any other your boards require 5V power supply. Please note that this functionality is just for your convenient and make sure to supply 5V+-10% when you connect external power supply.

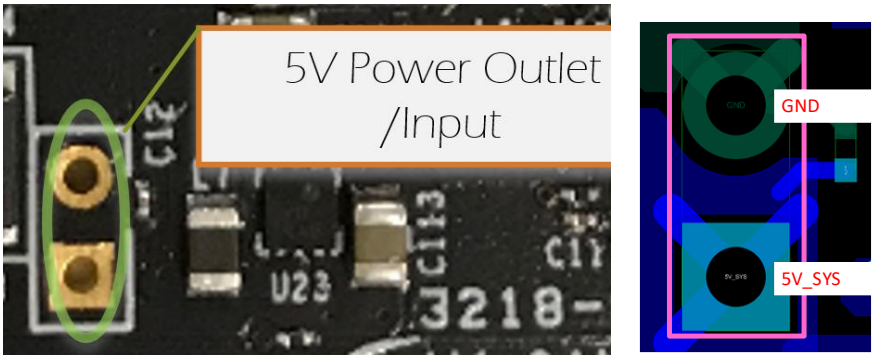

Figure 6-18. Pin Assignment of 5V Power Outlet/Input

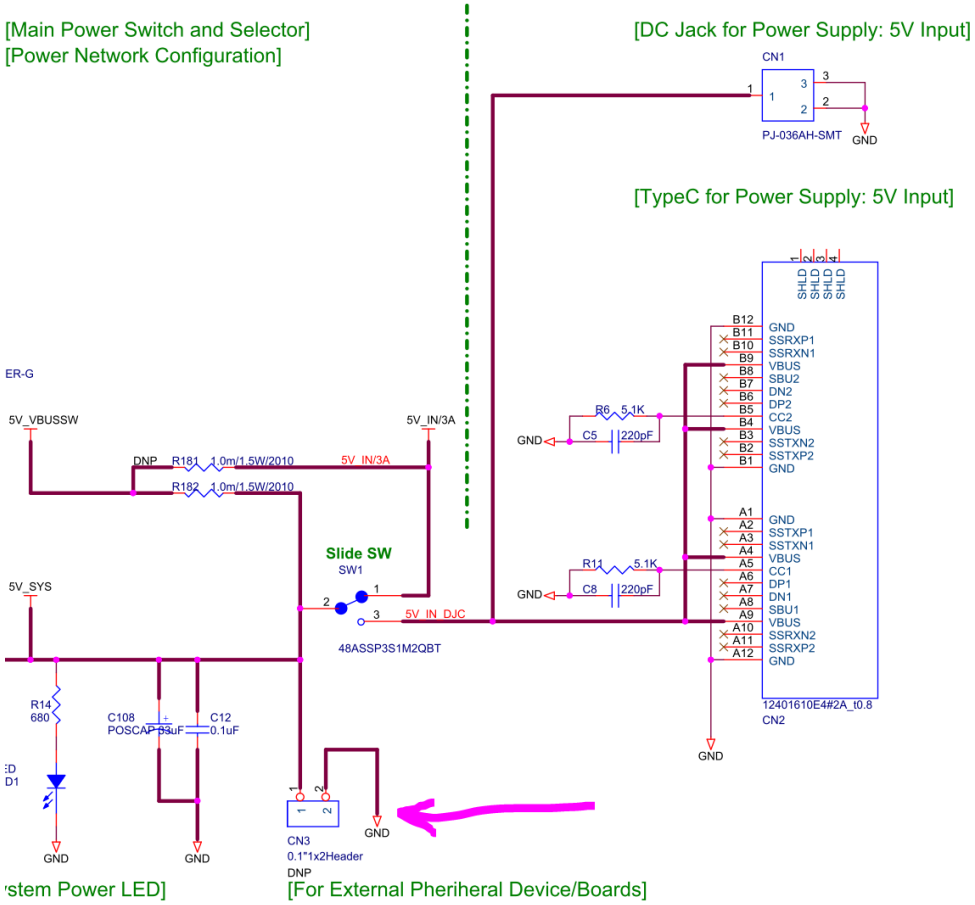

Figure 6-19. CN3 "5V Power Outlet/Input" circuit

6.3.20. J-Link 19pin JTAG I/F

SEGGER J-Link 19-Pin Cortex-M Adapter cable can be directly connected to this board. See detail in https://goo.gl/6yKeUL. Only DAP(SWDIO/SWCLK/SWO/nRESET) are available.

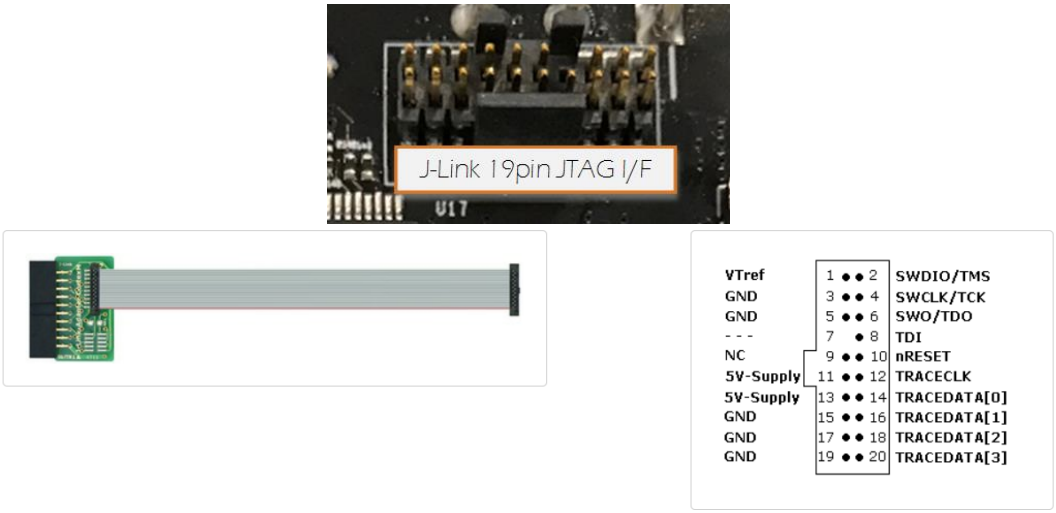

Figure 6-20. J-Link 19pin JTAG I/F

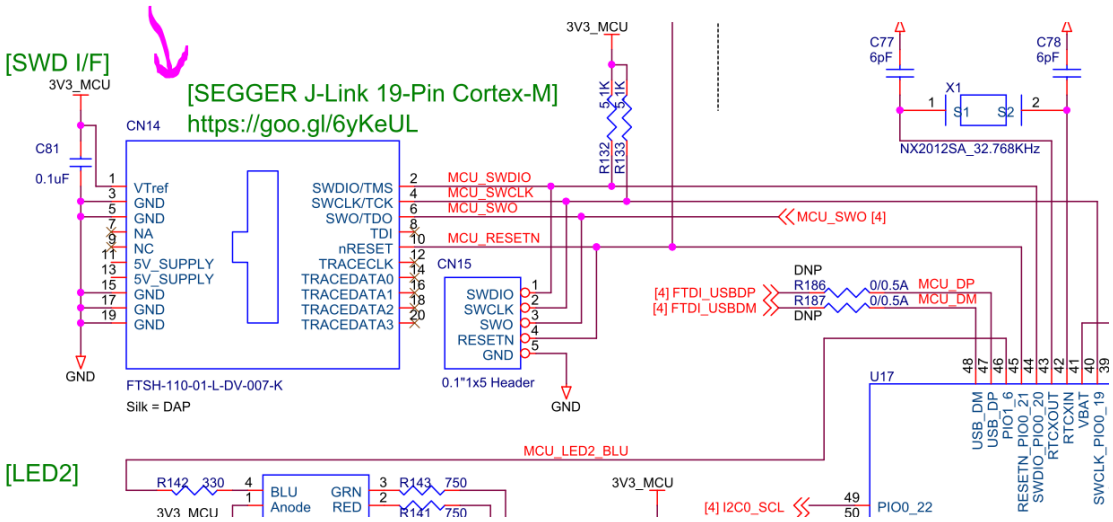

Figure 6-21. Circuit for J-Link 19pin JTAG I/F

6.3.21. REF_IN

Connect to the REF_OUT of another RD board or any other system. Clock should be 25MHz. And solder 0ohm resister or make this patter short when use this functionality.

Solder: J2, U.FL-R-SMT-1 (HIROSE)
Solder: R68, 0 ohm resister

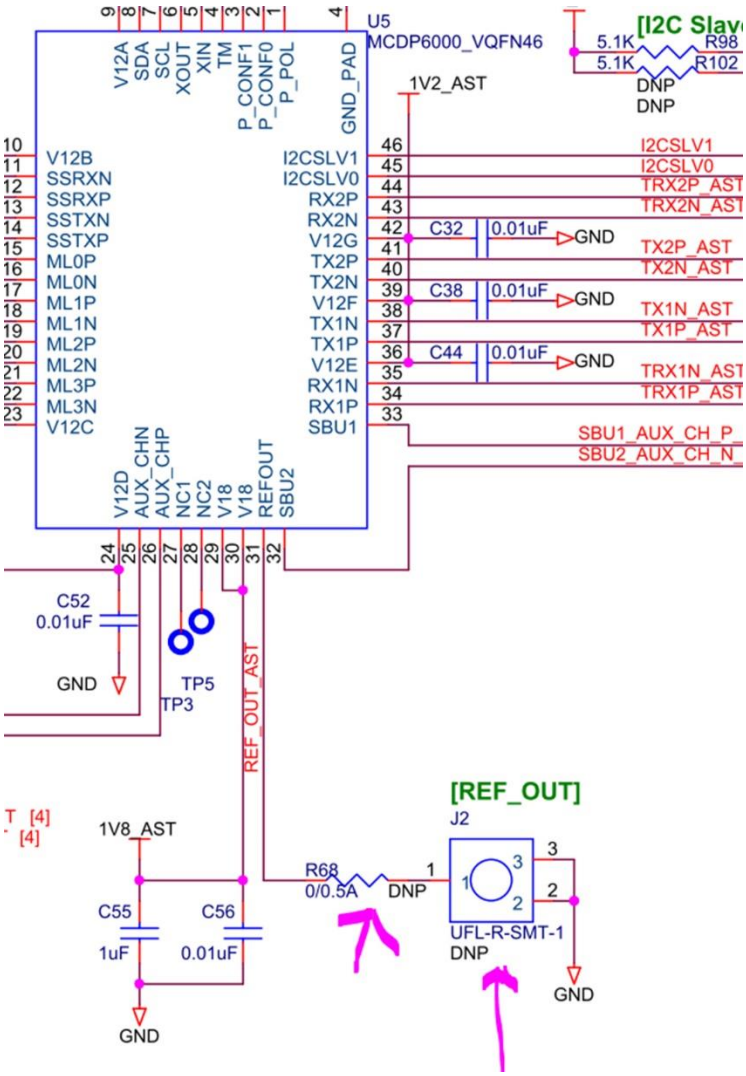

Figure 6-22. Circuit for REF_IN

6.3.22. REF_OUT

Reference clock out from MCDP6000 for cascade connection.
To use this J1 connector,
Solder: J1, U.FL-R-SMT-1(HIROSE)
Solder: R30, 0 ohm resister
Remove: R28

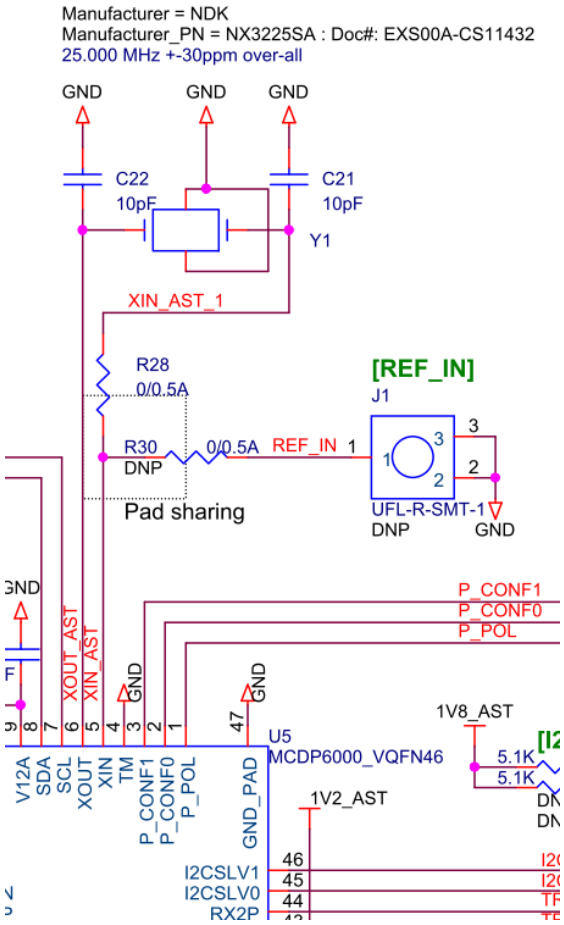

Figure 6-23. Circuit for REF_OUT

Note: For the cascade connection, we're providing ease of evaluating solution with this cabling option with U.FL connector. After soldering these micro coax connectors, this micro coax cable can be used for the connection between two boards. This is one of example for your convenience and you can purchase from Digikey.

U.FL Connector: "U.FL-R-SMT-1", https://goo.gl/FZYtLk (to Digikey)
Micro coax cable: "2015357-4", https://goo.gl/bjLKnn (to Digikey)

6.4. Display Definition of Status LEDs

Table 6.4-1. Display Definition

Status Description	LED1	LED2	LED3
Power-on	Blue		
USB3 mode in normal orientation	Blue	OFF	Blue
USB3 mode in flipped orientation	Blue	OFF	Red
DP 4-lane mode in normal orientation	Blue	Blue	OFF
DP 4-lane mode in flipped orientation	Blue	Red	OFF
USB3 + DP 2-lane mode in normal orientation	Blue	Blue	Blue
USB3 + DP 2-lane mode in flipped orientation	Blue	Red	Red

6.5. Frame Ground

This board has configurable frame-ground connection. The component (Ferrite Beads/Capacitor/Inductor) can be soldered for EMI/EMC purpose.

Default configuration of frame-ground are “Disconnected to main ground GND”.

Note: Frame Ground (Shield) is not intending to be used for the signal integrity of cable or system. If the current flow of internal signals appears on the frame ground (means that the frame ground helps signal/power integrity improvement), the emission level from cable/system is increased. And EMC will be weak because the system GND is exposed to outside. Any voltage impact on frame ground will affect the system stability. Proper component selection would be needed depending on the design of product.

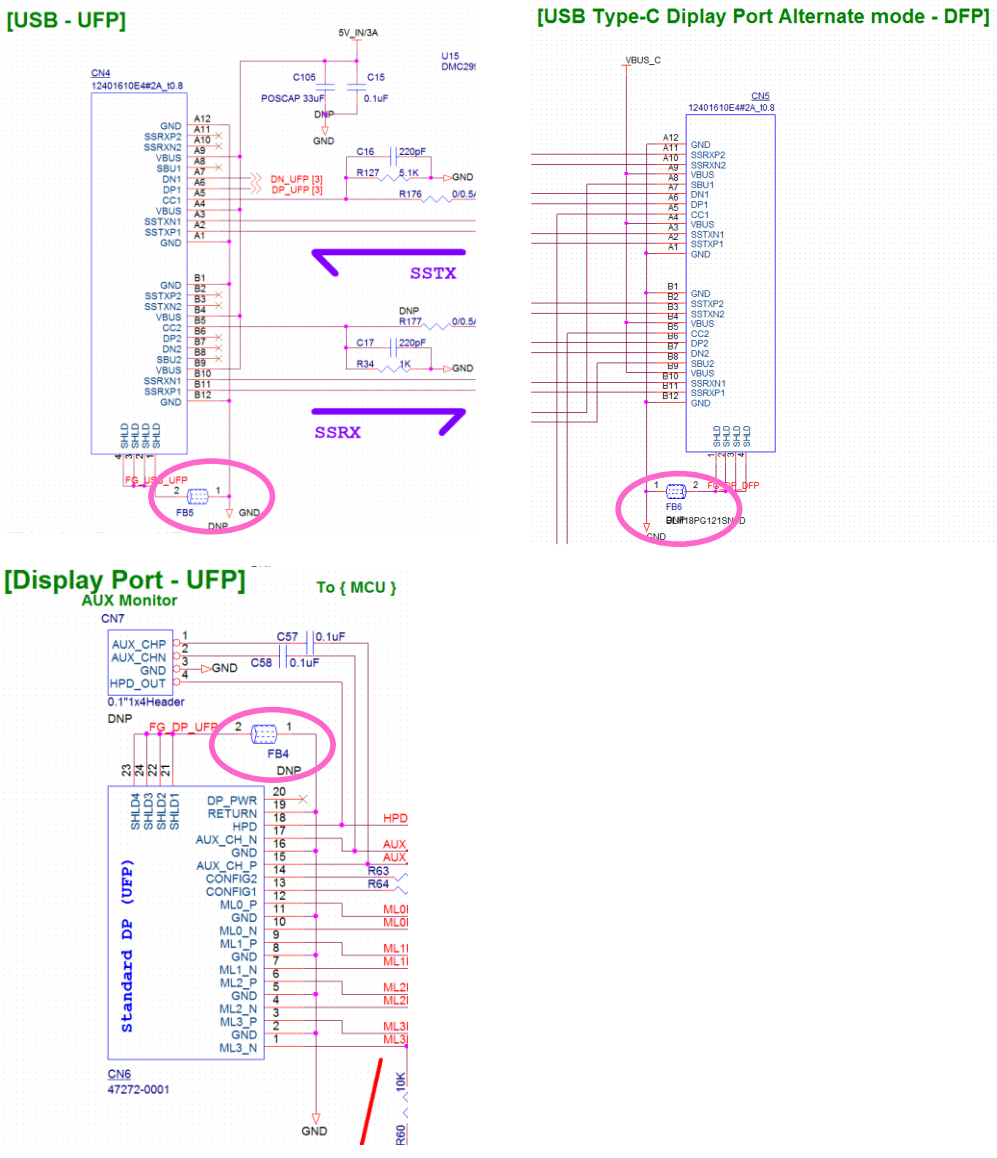

Figure 6-24. Frame Ground Circuit

6.6. PCB Design

6.6.1. PCB Stack-up Specification

Material: Isora FR4
Overall Board Thickness: 65mil +-10%
Impedance Control: 90ohm for all high-speed signal lines. (DP and USB)

Layer	Type	CU Weight	CU %	Material Description	Via Structure	Segment	Glass Style	Material Family	Dielectric constant @ 1GHz	Thickness After lamination [mil]
Soldermask										0.80
1	Mixed	H	40			Foil		Foil		1.90
				Press thk = 3.01 mil		Prepreg	1080 HRC(71)	370HR	3.77	3.01
2	Plane	1	76							1.20
				14.0 mil 1/1		Core	3-2116,1-106	370HR	4.19	14.00
3	Mixed	1	70							1.20
				Press thk = 5.84 mil		Prepreg	1080(66)	370HR	3.90	5.84
							1080(66)	370HR	3.90	
				10.0 mil --/--		Core	2-1652	370HR	4.34	10.00
				Press thk = 5.86 mil		Prepreg	1080(66)	370HR	3.90	5.86
							1080(66)	370HR	3.90	
4	Mixed	1	72							1.20
				14.0 mil 1/1		Core	3-2116,1-106	370HR	4.19	14.00
5	Plane	1	76							1.20
				Press thk = 3.01 mil		Prepreg	1080 HRC(71)	370HR	3.77	3.01
6	Signal	H	44			Foil		Foil		1.90
Soldermask										0.80

Figure 6-25. Aston RD4 PCB stack-up

Material information can be found on the Isora web site. https://www.isola-group.com/

Note: Our high-speed via structure of this board are optimized to this material (permittivity, actually) It's recommended to run FEM/FTDT 3D EM simulation in case of stack-up material change.

6.6.2. Design Materials

All our design data are available for eligible users. Please feel free to contact our worldwide FAE/Marketing team.

Schematic Editor: Cadence OrCAD Capture R17.2
Layout Editor: Cadence PCB Editor R17.2

PCB Stack-up specification, Gerber files, BOM (Bill Of Materials) are also available.

7. Recommended Accessories

7.1. AC Adapters

This list is a list for your convenience.
The board has two external power supply input “barrel receptacle” and “Type-C PD requiring 5V/3A”.

Barrel specification: Barrel Plug, 2.1mm I.D. x 5.5mm O.D. x 9.5mm

Table 7.1-1. Recommended AC Adapter List

Application	Manufacturer	Model	Description	Where to buy
DC5V Input Barrel Plug	CUI Inc	SMI36-5-V-P5	 5V/5A 25W AC/DC External Wall Mount Adapter Multi-Blade (Included) Input	https://goo.gl/2VEPF1
USB Type-C Power Adapter	Qualtek	QFWC-60-20-USCR	 5V, 9V, 12V, 15V, 20V 60W AC/DC External Wall Mount (Class II) Adapter Fixed Blade Input	https://www.digikey.com/short/z4jndz

7.2. Cables

This is a list for your convenience.
As of 2018/9/24, we have confirmed highest data rate with these cables.

Table 7.2-1. Recommended Cable List

Application	Manufacturer	Model	Description	Where to buy
DP Alt mode	StarTech.com	CDP2DPMM1MB	 Type-C to DP 1m(3ft)	https://goo.gl/KqGoQZ
	plugable	USBC-DP	 PLUGABLE USB 3.1 TYPE-C TO DISPLAYPORT ADAPTER CABLE 1.8m	https://goo.gl/Vxta53
	Cable Matters	201036	 USB-C to DisplayPort 4K 60Hz Cable, 1m(3ft)	https://goo.gl/mK9bwi
USB3.1Gen2	StarTech.com	USB31AC1M	 Type-A to C	https://goo.gl/2nXNgG
		USB31C5C1M	 Type-C to C. Power Delivery(5A)	https://goo.gl/2nXNgG
		USB31CC1M	 USB-C Cable - M/M - 1m (3ft) - USB 3.1 (10Gbps) - USB-IF Certified	https://goo.gl/2nXNgG
		USB31CUB50CM	 USB-C to Micro-B Cable - M/M - 0.5 m - USB 3.1 (10Gbps)	https://goo.gl/2nXNgG