2N2219
2N2219A

SILICON
NPN TRANSISTORS

TO-39 CASE

Central Semiconductor Corp.™

www.centralsemi.com

DESCRIPTION:
The CENTRAL SEMICONDUCTOR 2N2219 and 2N2219A are silicon NPN transistors manufactured by the epitaxial planar process, and designed for small signal general purpose and switching applications.

MARKING: FULL PART NUMBER

MAXIMUM RATINGS: (T_A=25°C unless otherwise noted)

	SYMBOL	2N2219	2N2219A	UNITS
Collector-Base Voltage	V_{CBO}	60	75	V
Collector-Emitter Voltage	V_{CEO}	30	40	V
Emitter-Base Voltage	V_{EBO}	5.0	6.0	V
Continuous Collector Current	I_C	800		mA
Power Dissipation	P_D	800		mW
Power Dissipation (T_C=25°C)	P_D	3.0		W
Operating and Storage Junction Temperature	T_J, T_{stg}	-65 to +200		°C

ELECTRICAL CHARACTERISTICS: (T_A=25°C)

		2N2219		2N2219A		
SYMBOL	**TEST CONDITIONS**	**MIN**	**MAX**	**MIN**	**MAX**	**UNITS**
I_{CBO}	V_{CB}=50V	-	10	-	-	nA
I_{CBO}	V_{CB}=60V	-	-	-	10	nA
I_{CEV}	V_{CE}=60V, V_{EB}=3.0V	-	-	-	10	nA
I_{EBO}	V_{EB}=3.0V	-	10	-	10	nA
BV_{CBO}	I_C=10μA	60	-	75	-	V
BV_{CEO}	I_C=10mA	30	-	40	-	V
BV_{EBO}	I_E=10μA	5.0	-	6.0	-	V
$V_{CE(SAT)}$	I_C=150mA, I_B=15mA	-	0.4	-	0.3	V
$V_{CE(SAT)}$	I_C=500mA, I_B=50mA	-	1.6	-	1.0	V
$V_{BE(SAT)}$	I_C=150mA, I_B=15mA	-	1.3	-	1.2	V
$V_{BE(SAT)}$	I_C=500mA, I_B=50mA	-	2.6	-	2.0	V
h_{FE}	V_{CE}=10V, I_C=100μA	35	-	35	-	
h_{FE}	V_{CE}=10V, I_C=1.0mA	50	-	50	-	
h_{FE}	V_{CE}=10V, I_C=10mA	75	-	75	-	
h_{FE}	V_{CE}=10V, I_C=150mA	100	300	100	300	
h_{FE}	V_{CE}=1.0V, I_C=150mA	50	-	50	-	
h_{FE}	V_{CE}=10V, I_C=500mA	30	-	-	-	
h_{FE}	V_{CE}=10V, I_C=500mA	-	-	40	-	

R1 (31-July 2013)

2N2219
2N2219A

SILICON
NPN TRANSISTORS

ELECTRICAL CHARACTERISTICS - Continued: (T_A=25°C)		**2N2219**		**2N2219A**		
SYMBOL	**TEST CONDITIONS**	**MIN**	**MAX**	**MIN**	**MAX**	**UNITS**
f_T	V_{CE}=20V, I_C=20mA	250	-	300	-	MHz
C_{ob}	V_{CB}=10V, f=100kHz	-	8.0	-	8.0	pF
t_{on}	V_{CC}=30V, I_C=150mA, I_B=15mA	-	35	-	35	ns
t_{off}	V_{CC}=30V, I_C=150mA, I_{B1}=I_{B2}=15mA	-	285	-	285	ns

TO-39 CASE - MECHANICAL OUTLINE

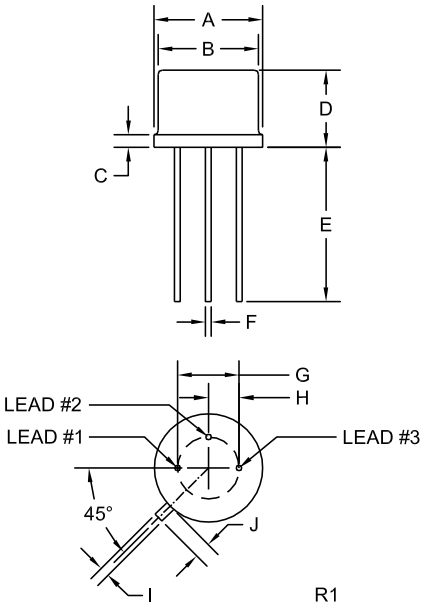

DIMENSIONS				
	INCHES		MILLIMETERS	
SYMBOL	MIN	MAX	MIN	MAX
A (DIA)	0.335	0.370	8.51	9.40
B (DIA)	0.315	0.335	8.00	8.51
C	-	0.040	-	1.02
D	0.240	0.260	6.10	6.60
E	0.500	-	12.70	-
F (DIA)	0.016	0.021	0.41	0.53
G (DIA)	0.200		5.08	
H	0.100		2.54	
I	0.028	0.034	0.71	0.86
J	0.029	0.045	0.74	1.14

TO-39 (REV: R1)

LEAD CODE:
1) Emitter
2) Base
3) Collector

MARKING: FULL PART NUMBER

R1 (31-July 2013)

2N2219
2N2219A

SILICON
NPN TRANSISTORS

TYPICAL ELECTRICAL CHARACTERISTICS

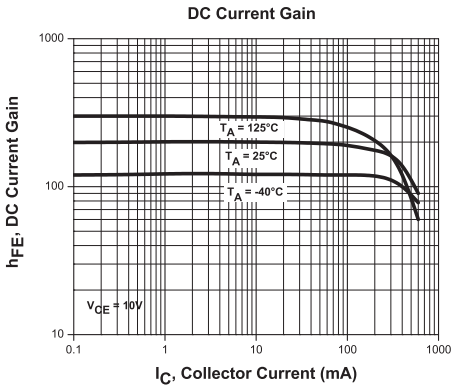

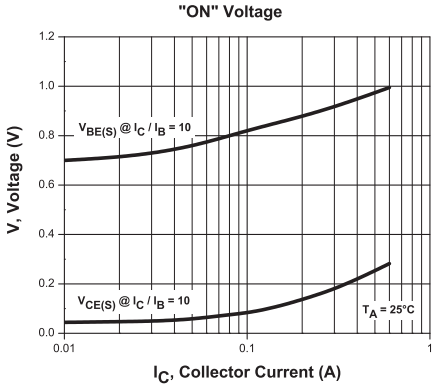

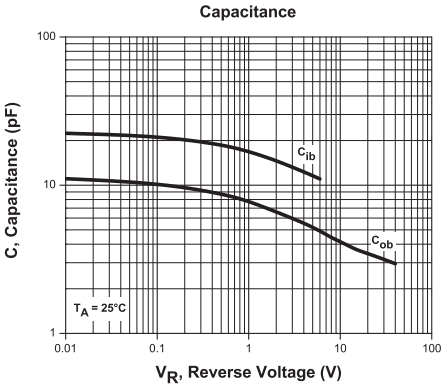

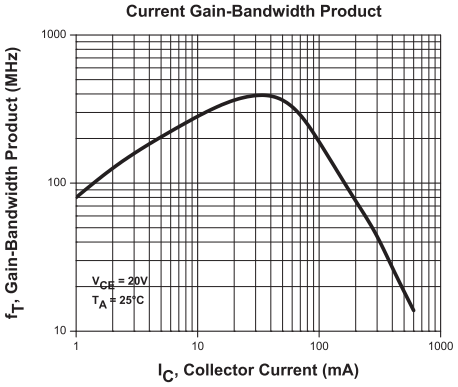

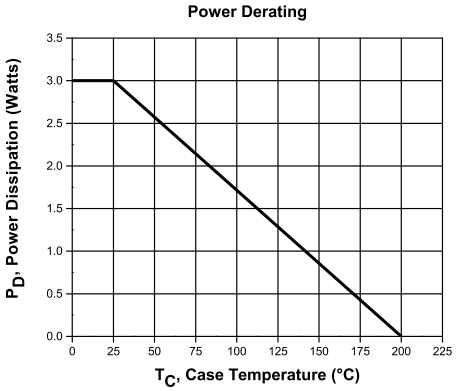

R1 (31-July 2013)

OUTSTANDING SUPPORT AND SUPERIOR SERVICES

PRODUCT SUPPORT

Central's operations team provides the highest level of support to insure product is delivered on-time.

- Supply management (Customer portals)
- Inventory bonding
- Consolidated shipping options
- Custom bar coding for shipments
- Custom product packing

DESIGNER SUPPORT/SERVICES

Central's applications engineering team is ready to discuss your design challenges. Just ask.

- Free quick ship samples (2nd day air)
- Online technical data and parametric search
- SPICE models
- Custom electrical curves
- Environmental regulation compliance
- Customer specific screening
- Up-screening capabilities
- Special wafer diffusions
- PbSn plating options
- Package details
- Application notes
- Application and design sample kits
- Custom product and package development

REQUESTING PRODUCT PLATING

1. If requesting Tin/Lead plated devices, add the suffix " TIN/LEAD" to the part number when ordering (example: 2N2222A TIN/LEAD).
2. If requesting Lead (Pb) Free plated devices, add the suffix " PBFREE" to the part number when ordering (example: 2N2222A PBFREE).

CONTACT US

Corporate Headquarters & Customer Support Team

Central Semiconductor Corp.
145 Adams Avenue
Hauppauge, NY 11788 USA
Main Tel: (631) 435-1110
Main Fax: (631) 435-1824
Support Team Fax: (631) 435-3388
www.centralsemi.com

Worldwide Field Representatives:
www.centralsemi.com/wwreps

Worldwide Distributors:
www.centralsemi.com/wwdistributors

For the latest version of Central Semiconductor's **LIMITATIONS AND DAMAGES DISCLAIMER**, which is part of Central's Standard Terms and Conditions of sale, visit: www.centralsemi.com/terms