AGB3N0CS-GEVK

AGB3N0CS Evaluation Board User's Manual

ON Semiconductor®

www.onsemi.com

EVAL BOARD USER'S MANUAL

Adapter Board Overview

The AGB3N0CS Adapter Board is an adapter that helps connect the Demo 3 Headboards with the Demo 2× Baseboard. Since the Demo 2× Baseboard does not use the same connector as the Demo 3 Headboards, the AGB3N0CS provides communication between the headboard parallel and serial connectors to communicate with the Demo 3 Headboard's interface connection.

Features

- Demo 2× Board Connectors
- Voltage Selection and Operating Mode Selector
- MIPI/HiSPi Connectors
- Demo 3 Headboard Connector

Block Diagram

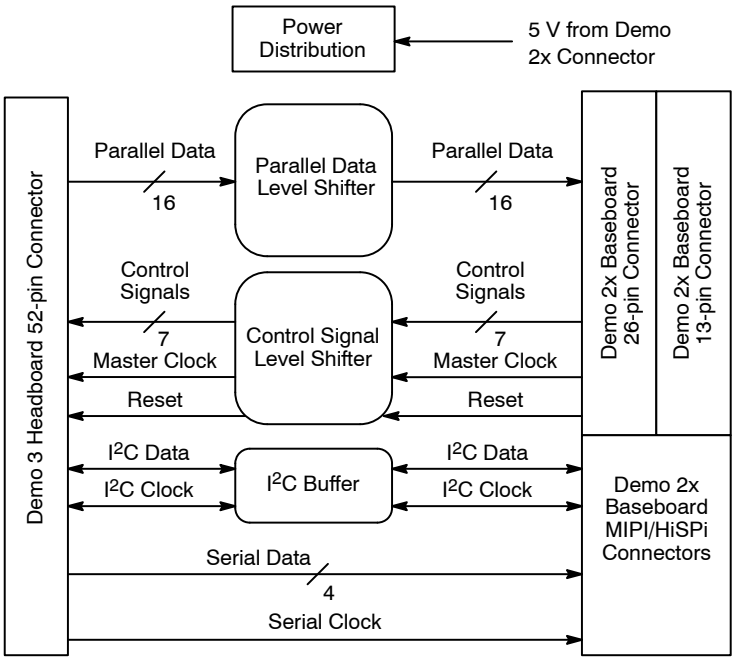

Figure 2. Block Diagram of AGB3N0CS−GEVK



Top View



Bottom View

Figure 1. AGB3N0CS Evaluation Board

© Semiconductor Components Industries, LLC, 2015

Top View

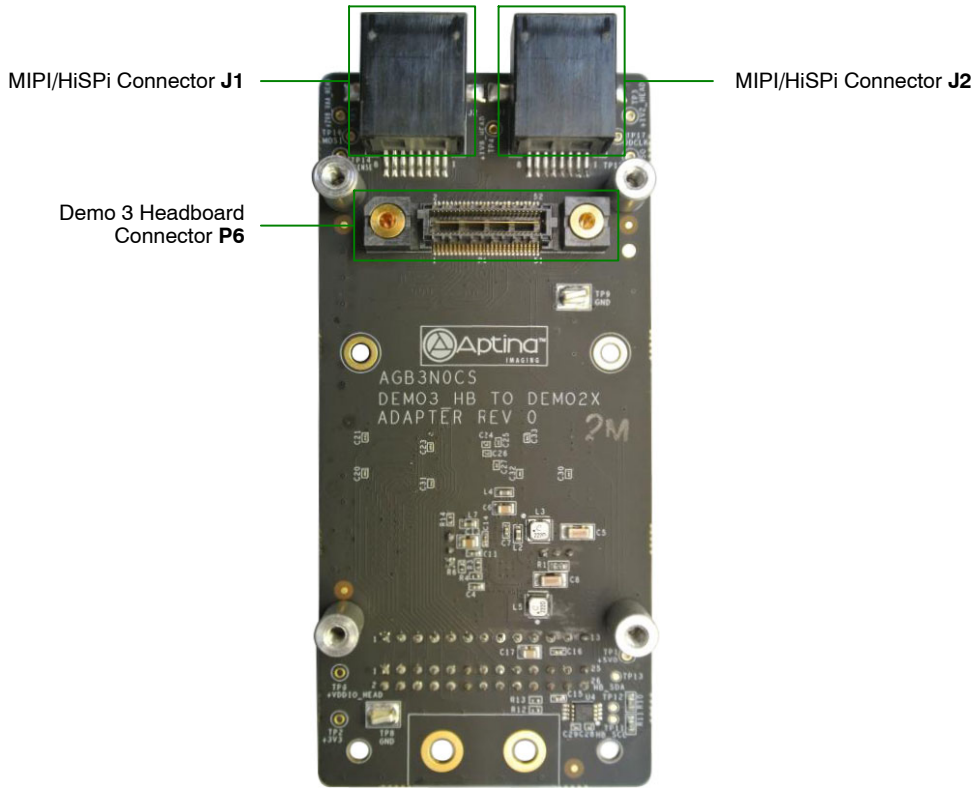

Figure 3. Top View of Adapter Board with Connectors

Bottom View

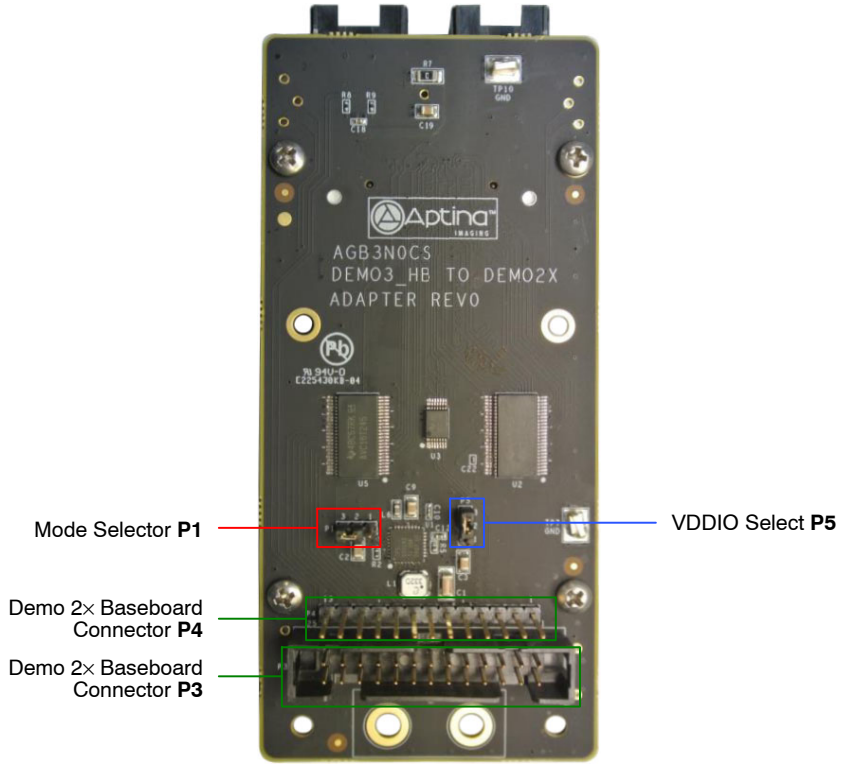

Figure 4. Bottom View of Adapter Board with Default Jumpers and Connectors

Jumper Pin Location

The jumpers on boards start with Pin 1 on the leftmost side of the pin. Grouped jumpers increase in pin size with each jumper added.

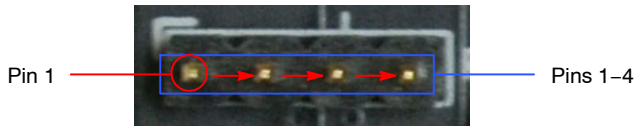

Figure 5. Pin Locations for a Single Jumper. Pin 1 is Located at the Leftmost Side

Jumper/Header Functions & Default Positions

The P1 jumper/header configuration allows mode selection to the Demo 2× Board. The 2−3 default jumper position puts the Demo 2× in power safe mode, while the 1−2 jumper position puts the Demo 2× in Forced PWM mode. The P5 jumper/header configuration allows for VDDIO selection to the Demo 2× Board. The 2−3 default jumper position connects VDDIO to +1.8 V, while the 1−2 jumper position connects VDDIO to +2.8 V.

AGB3N0CS−GEVK Connectors

The adapter board supports has various different connectors on-board, including a Demo 3 Headboard connector, two MIPI/HiSPi connectors for the Demo 2× Board, the 13-pin Demo 2× Board connector, and 26-pin Demo 2× Board connector.

Baseboard Connectors

The Demo 2× Baseboard connectors are shown in the pinout in Tables 1 and 2. The Demo 2× connectors has a 14-pin and 26-pin connector, as well as two MIPI/HiSPi connectors.

Table 1. 26-PIN DEMO 2X BASEBOARD CONNECTOR FUNCTION DESCRIPTION (P3)

Pin	Name	Description	DIR	Comment
1	S_DATA8	Parallel Data8	I/O	Parallel Data Bit
2	S_DATA9	Parallel Data9	I/O	Parallel Data Bit
3	S_DATA10	Parallel Data10	I/O	Parallel Data Bit
4	S_DATA11	Parallel Data11	I/O	Parallel Data Bit
5	S_DATA12	Parallel Data12	I/O	Parallel Data Bit
6	S_DATA13	Parallel Data13	I/O	Parallel Data Bit
7	S_DATA14	Parallel Data14	I/O	Parallel Data Bit
8	S_DATA15	Parallel Data15	I/O	Parallel Data Bit
9	S_DATA6	Parallel Data6	I/O	Parallel Data Bit
10	S_DATA7	Parallel Data7	I/O	Parallel Data Bit
11	GND	Ground	PWR	
12	GND	Ground	PWR	
13	S_LINE_VALID	Parallel Line Valid	Out	Check Line Valid Signal
14	S_SP5	General Control Signal 5	Out	Signal @ +3.3 V Level
15	NOT USED	Not Used	NA	
16	HEAD_RESET_L	Reset Signal to Sensor	In	Reset to Headboard Sensor
17	S_FRAME_VALID	Parallel Frame Valid	Out	Check Frame Valid Signal
18	HEAD_SDA	I^2C Data to Sensor	I/O	Signal @ +3.3 V Level
19	HEAD_SCL	I^2C Clock to Sensor	I/O	Signal @ +3.3 V Level
20	NOT USED	Not Used	NA	
21	+5V0_HEAD	+5V0 Power Input	PWR	For Powering Up the Headboard
22	+5V0_HEAD	+5V0 Power Input	PWR	For Powering Up the Headboard
23	S_PIXCLK	Parallel Pixel Clock	In	Parallel Data Pixel Clock
24	GND	Ground	PWR	
25	GND	Ground	PWR	
26	MCLK	Master Clock	In	Master Clock from Demo 3 Board

Table 2. 14-PIN DEMO 2X BASEBOARD CONNECTOR FUNCTION DESCRIPTION (P4)

Pin	Name	Description	DIR	Comment
1	GND	Ground	PWR	
2	S_DATA4	Parallel Data4	I/O	Parallel Data Bit
3	S_DATA5	Parallel Data5	I/O	Parallel Data Bit
4	S_DATA2	Parallel Data2	I/O	Parallel Data Bit
5	S_DATA3	Parallel Data3	I/O	Parallel Data Bit
6	S_DATA0	Parallel Data0	I/O	Parallel Data Bit
7	S_DATA1	Parallel Data1	I/O	Parallel Data Bit
8	S_SP0	General Control Signal 0	Out	Signal @ +3.3 V Level
9	S_SP1	General Control Signal 1	Out	Signal @ +3.3 V Level
10	S_SP2	General Control Signal 2	Out	Signal @ +3.3 V Level
11	S_SP3	General Control Signal 3	Out	Signal @ +3.3 V Level
12	S_SP4	General Control Signal 4	Out	Signal @ +3.3 V Level
13	+3V3_HEAD	+3.3 V to Headboard	PWR	For Powering Up the Headboard
14	GND	Ground	PWR	

onsemi, ONSEMI, and other names, marks, and brands are registered and/or common law trademarks of Semiconductor Components Industries, LLC dba "**onsemi**" or its affiliates and/or subsidiaries in the United States and/or other countries. **onsemi** owns the rights to a number of patents, trademarks, copyrights, trade secrets, and other intellectual property. A listing of **onsemi**'s product/patent coverage may be accessed at www.onsemi.com/site/pdf/Patent−Marking.pdf. **onsemi** is an Equal Opportunity/Affirmative Action Employer. This literature is subject to all applicable copyright laws and is not for resale in any manner.

The evaluation board/kit (research and development board/kit) (hereinafter the "board") is not a finished product and is not available for sale to consumers. The board is only intended for research, development, demonstration and evaluation purposes and will only be used in laboratory/development areas by persons with an engineering/technical training and familiar with the risks associated with handling electrical/mechanical components, systems and subsystems. This person assumes full responsibility/liability for proper and safe handling. Any other use, resale or redistribution for any other purpose is strictly prohibited.

THE BOARD IS PROVIDED BY ONSEMI TO YOU "AS IS" AND WITHOUT ANY REPRESENTATIONS OR WARRANTIES WHATSOEVER. WITHOUT LIMITING THE FOREGOING, ONSEMI (AND ITS LICENSORS/SUPPLIERS) HEREBY DISCLAIMS ANY AND ALL REPRESENTATIONS AND WARRANTIES IN RELATION TO THE BOARD, ANY MODIFICATIONS, OR THIS AGREEMENT, WHETHER EXPRESS, IMPLIED, STATUTORY OR OTHERWISE, INCLUDING WITHOUT LIMITATION ANY AND ALL REPRESENTATIONS AND WARRANTIES OF MERCHANTABILITY, FITNESS FOR A PARTICULAR PURPOSE, TITLE, NON−INFRINGEMENT, AND THOSE ARISING FROM A COURSE OF DEALING, TRADE USAGE, TRADE CUSTOM OR TRADE PRACTICE.

onsemi reserves the right to make changes without further notice to any board.

You are responsible for determining whether the board will be suitable for your intended use or application or will achieve your intended results. Prior to using or distributing any systems that have been evaluated, designed or tested using the board, you agree to test and validate your design to confirm the functionality for your application. Any technical, applications or design information or advice, quality characterization, reliability data or other services provided by **onsemi** shall not constitute any representation or warranty by **onsemi**, and no additional obligations or liabilities shall arise from **onsemi** having provided such information or services.

onsemi products including the boards are not designed, intended, or authorized for use in life support systems, or any FDA Class 3 medical devices or medical devices with a similar or equivalent classification in a foreign jurisdiction, or any devices intended for implantation in the human body. You agree to indemnify, defend and hold harmless **onsemi**, its directors, officers, employees, representatives, agents, subsidiaries, affiliates, distributors, and assigns, against any and all liabilities, losses, costs, damages, judgments, and expenses, arising out of any claim, demand, investigation, lawsuit, regulatory action or cause of action arising out of or associated with any unauthorized use, even if such claim alleges that **onsemi** was negligent regarding the design or manufacture of any products and/or the board.

This evaluation board/kit does not fall within the scope of the European Union directives regarding electromagnetic compatibility, restricted substances (RoHS), recycling (WEEE), FCC, CE or UL, and may not meet the technical requirements of these or other related directives.

FCC WARNING − This evaluation board/kit is intended for use for engineering development, demonstration, or evaluation purposes only and is not considered by **onsemi** to be a finished end product fit for general consumer use. It may generate, use, or radiate radio frequency energy and has not been tested for compliance with the limits of computing devices pursuant to part 15 of FCC rules, which are designed to provide reasonable protection against radio frequency interference. Operation of this equipment may cause interference with radio communications, in which case the user shall be responsible, at its expense, to take whatever measures may be required to correct this interference.

onsemi does not convey any license under its patent rights nor the rights of others.

LIMITATIONS OF LIABILITY: **onsemi** shall not be liable for any special, consequential, incidental, indirect or punitive damages, including, but not limited to the costs of requalification, delay, loss of profits or goodwill, arising out of or in connection with the board, even if **onsemi** is advised of the possibility of such damages. In no event shall **onsemi**'s aggregate liability from any obligation arising out of or in connection with the board, under any theory of liability, exceed the purchase price paid for the board, if any.

The board is provided to you subject to the license and other terms per **onsemi**'s standard terms and conditions of sale. For more information and documentation, please visit www.onsemi.com.

PUBLICATION ORDERING INFORMATION

LITERATURE FULFILLMENT:
Email Requests to: orderlit@onsemi.com

onsemi Website: www.onsemi.com

TECHNICAL SUPPORT
North American Technical Support:
Voice Mail: 1 800−282−9855 Toll Free USA/Canada
Phone: 011 421 33 790 2910

Europe, Middle East and Africa Technical Support:
Phone: 00421 33 790 2910
For additional information, please contact your local Sales Representative