Allied Vision

mipi

Alvium
1500 C-210m

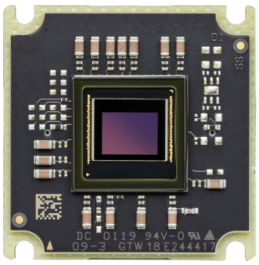

- AR0521 CMOS sensor
- ALVIUM image processing
- MIPI CSI-2 interface
- Various hardware options

Hardware option: Bare Board

Alvium 1500 C – Powerful camera modules for embedded vision

Revolutionary MIPI CSI-2 camera module

Alvium 1500 C-210 with ON Semi AR0521SR (HD mode) runs 119.0 frames per second at 2.1 MP resolution.

Alvium 1500 C is a revolutionary MIPI CSI-2 camera optimized for embedded vision applications. The Alvium 1500 C offers the performance and versatility of industrial cameras for the embedded world. Equipped with industrial-grade CMOS sensors from ON Semiconductor, Alvium 1500 C cameras deliver excellent image quality and high frame rates.

The standardized CSI-2 driver ensures quick integration with the flexibility to change camera models easily.

To operate Alvium CSI-2 cameras on your vision system, Allied Vision provides different access modes: - Direct Register Access (DRA) to control the cameras via registers for advanced users. - Video4Linux2 Access allows to control the cameras via established V4L2 API and applications like GStreamer and OpenCV. Open-source CSI-2 drivers are available on GitHub for different boards and system on chips (SoCs).

See the Alvium Cameras Hardware Options for lens mount and housing options, as well as the Customization and OEM Solutions webpage for additional options.

Allied Vision

Specifications

Product code	14627
Interface	MIPI CSI-2, up to 4 lanes
Resolution	1928 (H) × 1088 (V)
Spectral range	300 to 1100 nm
Sensor	ON Semi AR0521SR (HD mode)
Sensor type	CMOS
Shutter mode	Rolling shutter
Sensor size	Type 1/3.6
Pixel size	2.2 µm × 2.2 µm
Lens mounts (available)	C-Mount
Max. frame rate at full resolution	119 fps using 2 to 4 lanes, RAW8 (GREY)
ADC	10 Bit
Image buffer (RAM)	256 KByte
Non-volatile memory (Flash)	1024 KByte

Imaging performance

Imaging performance data is based on the evaluation methods in the EMVA 1288 Release 3.1 standard for characterization of image sensors and cameras. Measurements are typical values for monochrome models measured without optical filter.

Quantum efficiency at 529 nm	79 %
Temporal dark noise	5.9 e^-
Saturation capacity	9890 e^-
Dynamic range	63 dB
Absolute sensitivity threshold	7.1 e^-

Output	
Bit depth	10-bit Bit
Raw pixel formats	RAW8 (GREY), RAW10 (Y10) [MIPI CSI-2 (FOURCC)]

General purpose inputs/outputs (GPIOs)	
TTL I/Os	2 programmable GPIOs

Operating conditions/dimensions	
Operating temperature	-20 °C to +85 °C (cooling areas)
Power requirements (DC)	5 VDC over MIPI CSI-2
Power consumption	Typical: 1.9 W
Mass	10 g
Body dimensions (L × W × H in mm)	7 × 26 × 26
Regulations	2011/65/EU, including amendment 2015/863/EU (RoHS)

Quantum efficiency

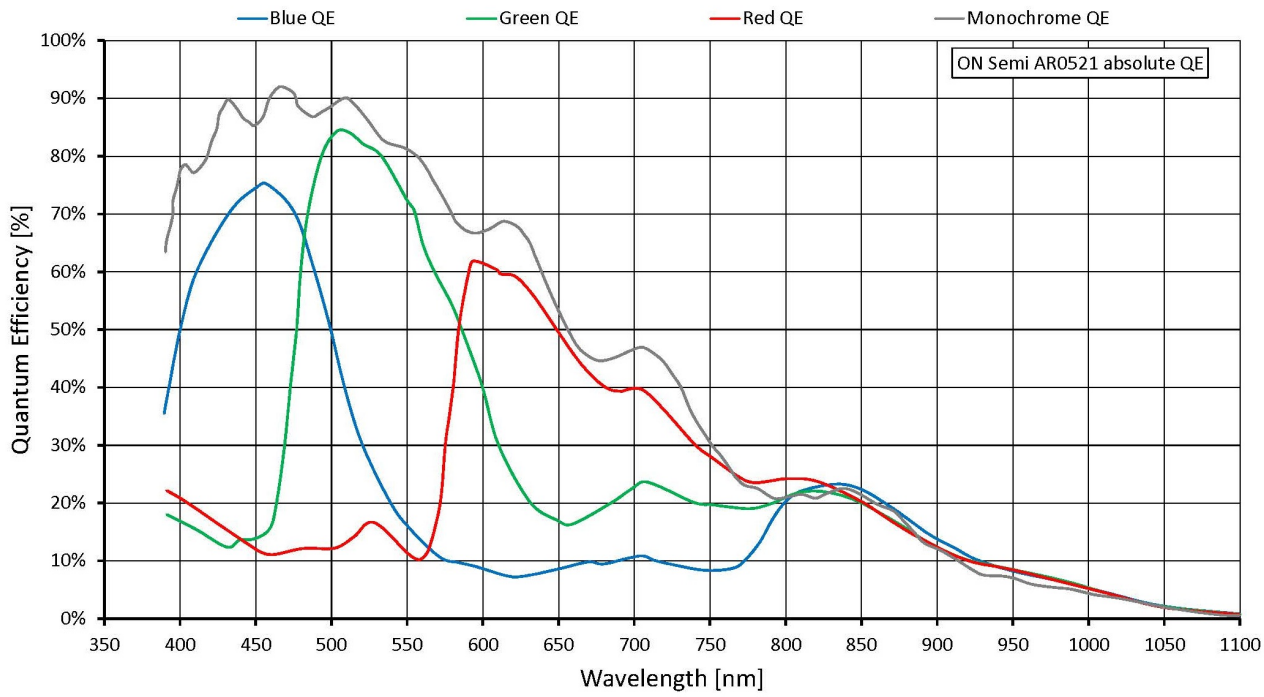

Features

Image control: Auto

- Auto exposure
- Auto gain
- Auto white balance (color models)

Image control: Other

- Black level
- Color transformation (incl. hue, saturation; color models)
- De-Bayering up to 5×5 (color models)
- DPC (defect pixel correction)
- FPNC (fixed pattern noise correction)
- Gamma
- Reverse X/Y
- ROI (region of interest)

Camera control

- Acquisition frame rate
- Firmware update in the field
- I/O and trigger control
- Temperature monitoring

Technical drawing

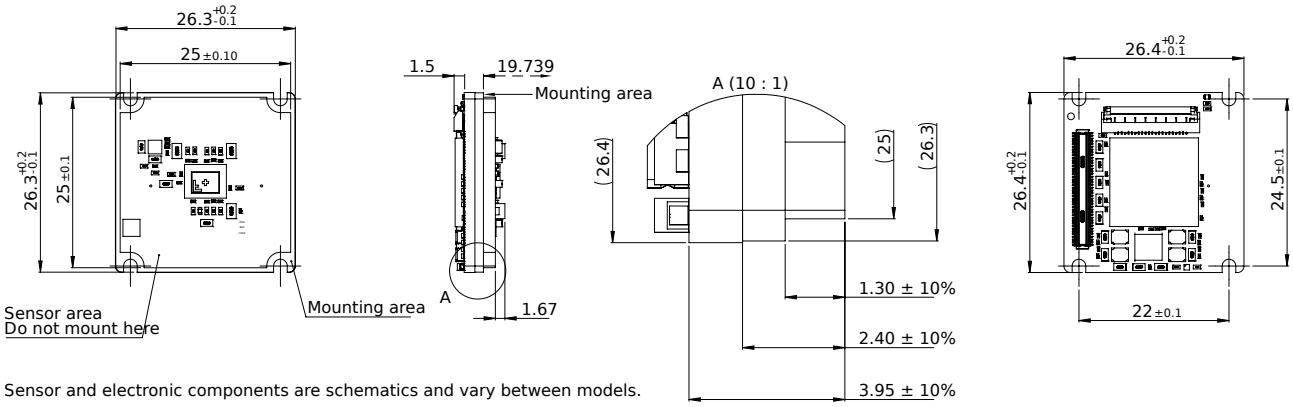

Sensor and electronic components are schematics and vary between models.