FEMALE FACE VIEW	
4 POLE	5 POLE
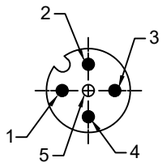	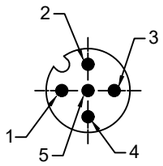
WIRING DIAGRAM	
1 BROWN 2 WHITE 3 BLUE 4 BLACK 5 NOT USED	1 BROWN 2 WHITE 3 BLUE 4 BLACK 5 GRAY

PART NO	ENGINEERING NO.	FINISHED LENGTH	POLES	CABLE DIA.
1200660969	884031K03M003	0.3M [1FT]	4	.26/6.6
1202010015	884031K03M200	20M [65FT 7 IN]		
1200661045	885031K03M005	0.5M [1FT 8 IN]	5	.28/7.1
1200661961	885031K03M200	20M [65FT 7 IN]		

MALE FACE VIEW	
4 POLE	5 POLE
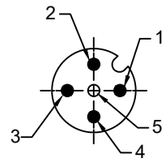	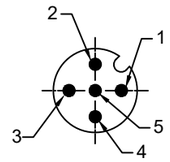
WIRING DIAGRAM	
1 BROWN 2 WHITE 3 BLUE 4 BLACK 5 NOT USED	1 BROWN 2 WHITE 3 BLUE 4 BLACK 5 GRAY

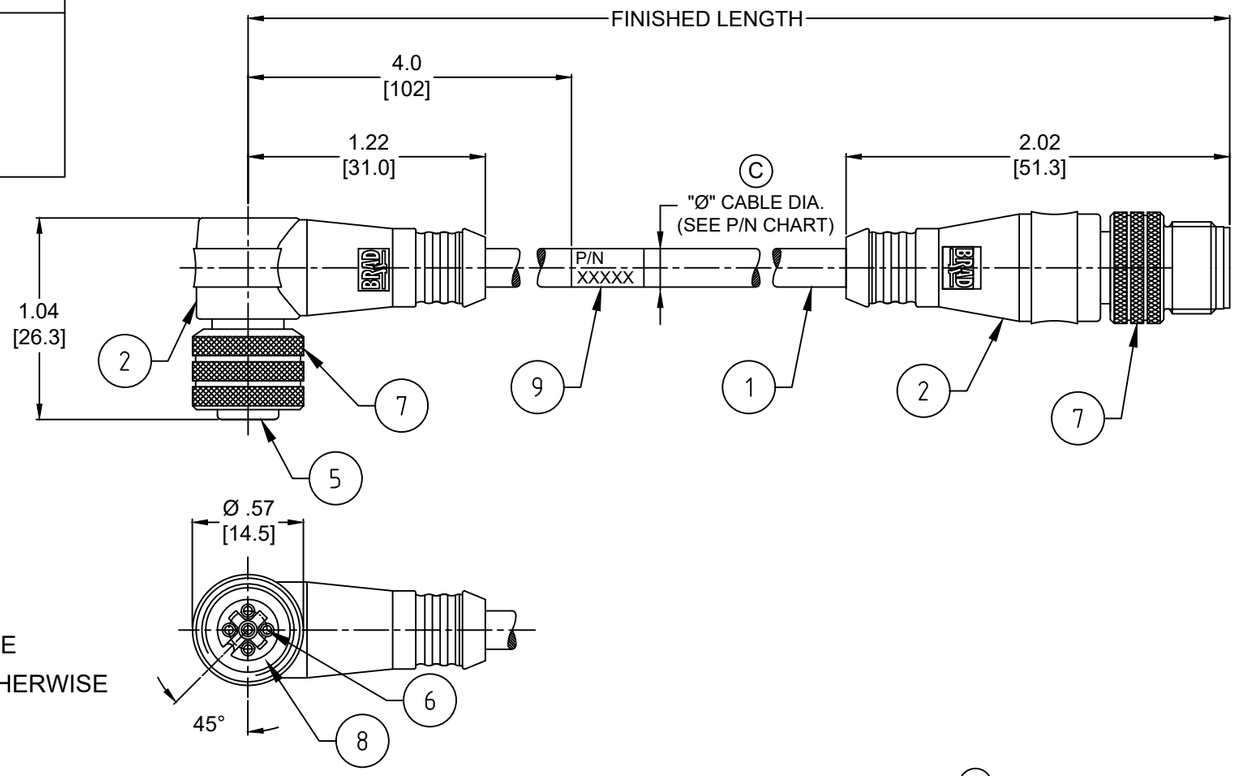

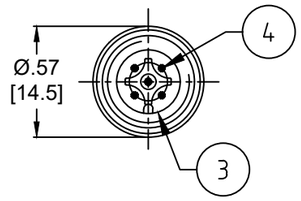

NOTES:

1. MATERIAL: AS NOTED
2. FINISH: AS NOTED
3. ELECTRICAL:
   VOLTAGE: 250V
   CURRENT: 4A
4. TEMP RATING: -20°TO +105°C
5. PROTECTION: IP67 (WHEN MATED)
6. COUPLING THREAD: M12X1
7. UL RECOGNIZED FILE: E152210
   CSA CERTIFIED FILE: LR6837 Ⓒ
8. ALL DIMENSIONS ARE FOR REFERENCE
   UNLESS TOLERANCED OR NOTED OTHERWISE

CABLE FLEX CHARACTERISTICS Ⓒ

TORSIONAL FLEX TEST	10 MILLION CYCLES PER MIL-C-13777G
BEND FLEX TEST	10 MILLION CYCLES PER MIL-C-13777G
WELD SLAG RESISTANCE	WOODHEAD STANDARD S-300

9	WRAP LABEL	VINYL	BLACK/YELLOW	Ⓒ
8	O-RING	VITON	RED	
7	COUPLER	BRASS	TEFLON/NICKEL	
6	CONTACT SOCKET	COPPER ALLOY	GOLD OVER NICKEL	
5	INSERT (FEMALE)	PUR	BLACK	
4	CONTACT PIN	COPPER ALLOY	GOLD OVER NICKEL	
3	INSERT (MALE)	PUR	BLACK	
2	OVERMOLD	TPC	YELLOW	Ⓒ
1	CABLE #18/4-5 AWG	TPE JACKET	YELLOW	
ITEM	DESCRIPTION	MATERIAL	FINISH	

PART NO. MATRIX Ⓒ

884031K03M003

POLES (4 & 5)

FINISHED LENGTH
M005 = 0.5 METER
M010 = 1 METER
M100 = 10 METER

Ⓒ

CABLE LENGTH TOLERANCES
<.3M [1FT]: +19mm-0 [+.75in-0]
.3 - .9M [1 - 3FT]: +44.5mm-0 [+1.75in-0]
.9 - 1.8M [3 - 6FT]: +55.6mm-0 [+2.19in-0]
1.8 - 3.7M [6 - 12FT: +88.9mm-0 [+3.50in-0]
3.7 - 7.3M [12 - 24FT]: +165.1mm-0 [+6.50in-0]
7.3-14.6M [24 - 48FT]: +317.5mm-0 [+12.50in-0]
14.6 - 30.5M [48-100FT]: +622.3mm-0 [+24.50in-0]
OVER 30M [100FT] +2% OF FINISHED LENGTH

THIS DRAWING CONTAINS INFORMATION THAT IS PROPRIETARY TO MOLEX ELECTRONIC TECHNOLOGIES, LLC AND SHOULD NOT BE USED WITHOUT WRITTEN PERMISSION

FUNCTIONAL SYMBOLS: FA=0, FC=0, FP=0
DIVISIONAL SYMBOLS

DIMENSION UNITS: INCH/MM
SCALE: NTS

GENERAL TOLERANCES (UNLESS SPECIFIED)

	mm	INCH
4 PLACES	±----	±----
3 PLACES	±----	±----
2 PLACES	±----	±----
1 PLACE	±----	±----
0 PLACES	±----	±----
ANGULAR TOL ±	---- °	

DRAFT WHERE APPLICABLE MUST REMAIN WITHIN DIMENSIONS

CURRENT REV DESC: ITEM #2 WAS TPE. ITEM #9 WAS MYLAR. REMOVED 3 POLE DETAILS. ADDED UL, CSA, TOL CHART & CABLE DIA. MODIFIED PN CHART & FACE VIEWS

EC NO: 669893
DRWN: ABENJAMINLW 2021/06/30
CHK'D: RSTONE 2021/07/12
APPR: BWOODMAN 2021/07/14

INITIAL REVISION:
DRWN: LSTEMMLE 2010/02/01
APPR: FPACHER 2010/02/03

molex

MICRO-CHANGE CORDSET, M12
4-5 POLE, FEMALE 90DEG - MALE STRAIGHT,
SINGLE KEY, #18 AWG TPE HI-FLEX

PRODUCT CUSTOMER DRAWING

DOCUMENT NUMBER	DOC TYPE	DOC PART	REVISION
SD-120066-021	PSD	001	C

THIRD ANGLE PROJECTION	DRAWING	SERIES	MATERIAL NUMBER	CUSTOMER	SHEET NUMBER
	A3-SIZE	120066	SEE CHART	GENERAL MARKET	1 OF 1

DOCUMENT STATUS	P1	RELEASE DATE	2021/07/14 21:16:12

FORMAT: ACAD-tb-prod-A3
REVISION: B
DATE: 2020/01/14