ON Semiconductor®

NC7S14
TinyLogic® HS Inverter with Schmitt Trigger Input

General Description

The NC7S14 is a single high performance CMOS Inverter with Schmitt Trigger input. The circuit design provides hysteresis between the positive-going and negative going input thresholds thereby improving noise margins.

Advanced Silicon Gate CMOS fabrication assures high speed and low power circuit operation over a broad V_{CC} range. ESD protection diodes inherently guard both input and output with respect to the V_{CC} and GND rails.

Features

- Space saving SOT23 or SC70 5-lead package
- Ultra small MicroPak™ leadless package
- Schmitt input hysteresis: > 1V typ
  High speed: t_{PD} 4.5 ns typ
- Low quiescent power: I_{CC} < 1 µA
- Balanced output drive: 2 mA I_{OL}, –2 mA I_{OH}
- Broad V_{CC} operating range: 2V – 6V
- Balanced propagation delays
- Specified for 3V operation

Ordering Code:

Order Number	Package Number	Package Top Mark	Package Description	Supplied As
NC7S14M5X	MA05B	7S14	5-Lead SOT23, JEDEC MO-178, 1.6mm	3k Units on Tape and Reel
NC7S14P5X	MAA05A	S14	5-Lead SC70, EIAJ SC-88a, 1.25mm Wide	3k Units on Tape and Reel
NC7S14L6X	MAC06A	UU	6-Lead MicroPak, 1.0mm Wide	5k Units on Tape and Reel

Logic Symbol

IEEE/IEC

Pin Descriptions

Pin Names	Description
A	Input
Y	Output
NC	No Connect

Function Table

$Y = \overline{A}$

Input	Output
A	**Y**
L	H
H	L

H = HIGH Logic Level

L = LOW Logic Level

Connection Diagrams

Pin Assignments for SC70 and SOT23

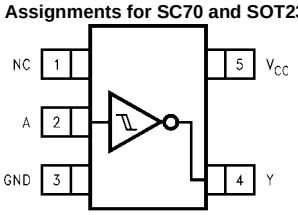

(Top View)

Pad Assignments for MicroPak

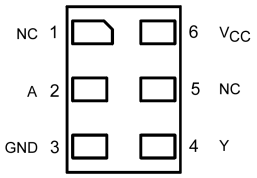

(Top Thru View)

© 2004 Semiconductor Components Industries, LLC. December-2017, Rev. 2

Publication Order Number: NC7S14/D

Absolute Maximum Ratings (Note 1)

Supply Voltage (V_{CC})	–0.5V to +7.0V
DC Input Diode Current (I_{IK})	
@$V_{IN} \leq -0.5V$	–20 mA
@$V_{IN} \geq V_{CC}$ +0.5V	+20 mA
DC Input Voltage (V_{IN})	–0.5V to V_{CC} +0.5V
DC Output Diode Current (I_{OK})	
@$V_{OUT} < -0.5V$	–20 mA
@$V_{OUT} > V_{CC}$ +0.5V	+20 mA
DC Output Voltage (V_{OUT})	–0.5V to V_{CC} +0.5V
DC Output Source or Sink Current (I_{OUT})	±12.5 mA
DC V_{CC} or Ground Current per Output Pin (I_{CC} or I_{GND})	±25 mA
Storage Temperature (T_{STG})	–65°C to +150°C
Junction Temperature (T_J)	150°C
Lead Temperature (T_L) (Soldering, 10 seconds)	260°C
Power Dissipation (P_D) @ +85°C	
SOT23-5	200 mW
SC70-5	150 mW

Recommended Operating Conditions (Note 2)

Supply Voltage (V_{CC})	2.0V to 6.0V
Input Voltage (V_{IN})	0V to V_{CC}
Output Voltage (V_{OUT})	0V to V_{CC}
Operating Temperature (T_A)	–40°C to +85°C
Thermal Resistance (θ_{JA})	
SOT23-5	300°C/W
SC70-5	425°C/W

Note 1: Absolute maximum ratings are those values beyond which damage to the device may occur. The databook specifications should be met, without exception, to ensure that the system design is reliable over its power supply, temperature, and output/input loading variables. ON Semiconductor does not recommend operation of circuits outside the databook specifications.

Note 2: Unused inputs must be held HIGH or LOW. They may not float.

DC Electrical Characteristics

Symbol	Parameter	V_{CC} (V)	$T_A = +25°C$ Min	Typ	Max	$T_A = -40°C$ to $+85°C$ Min	Max	Units	Conditions
V_P	Positive Threshold Voltage	2.0	1.0	1.29	1.5	1.0	1.6	V	
		3.0	1.5	1.90	2.2	1.5	2.2		
		4.5	2.3	2.73	3.15	2.3	3.15		
		6.0	3.0	3.56	4.2	3.0	4.2		
V_N	Negative Threshold Voltage	2.0	0.3	0.70	0.9	0.3	0.9	V	
		3.0	0.6	1.05	1.35	0.6	1.35		
		4.5	1.13	1.66	2.0	1.13	2.0		
		6.0	1.5	2.24	2.6	1.5	2.6		
V_H	Hysteresis Voltage	2.0	0.3	0.59	1.0	0.3	1.0	V	
		3.0	0.4	0.85	1.3	0.4	1.3		
		4.5	0.6	1.08	1.4	0.6	1.4		
		6.0	0.8	1.31	1.7	0.8	1.7		
V_{OH}	HIGH Level Output Voltage	2.0	1.90	2.0		1.90		V	$I_{OH} = -20\ \mu A$, $V_{IN} = V_{IL}$
		3.0	2.90	3.0		2.90			
		4.5	4.40	4.5		4.40			
		6.0	5.90	6.0		5.90			
		3.0	2.68	2.87		2.63		V	$V_{IN} = V_{IL}$, $I_{OH} = -1.3$ mA
		4.5	4.18	4.37		4.13			$I_{OH} = -2$ mA
		6.0	5.68	5.86		5.63			$I_{OH} = -2.6$ mA
V_{OL}	LOW Level Output Voltage	2.0		0.0	0.10		0.10	V	$I_{OH} = 20\ \mu A$, $V_{IN} = V_{IH}$
		3.0		0.0	0.10		0.10		
		4.5		0.0	0.10		0.10		
		6.0		0.0	0.10		0.10		
		3.0		0.1	0.26		0.33	V	$V_{IN} = V_{IH}$, $I_{OL} = 1.3$ mA
		4.5		0.1	0.26		0.33		$I_{OL} = 2$ mA
		6.0		0.1	0.26		0.33		$I_{OL} = 2.6$ mA

DC Electrical Characteristics (Continued)

Symbol	Parameter	V_{CC} (V)	$T_A = +25°C$ Min	Typ	Max	$T_A = -40°C$ to $+85°C$ Min	Max	Units	Conditions
I_{IN}	Input Leakage Current	6.0			±0.1		±1.0	μA	$V_{IN} = V_{CC}$, GND
I_{CC}	Quiescent Supply Current	6.0			1.0		10.0	μA	$V_{IN} = V_{CC}$, GND

AC Electrical Characteristics

Symbol	Parameter	V_{CC} (V)	$T_A = +25°C$ Min	Typ	Max	$T_A = -40°C$ to $+85°C$ Min	Max	Units	Conditions	Figure Number
t_{PLH} t_{PHL}	Propagation Delay	5.0		4.5	21			ns	$C_L = 15$ pF	Figures 1, 3
		2.0		20	100		125	ns	$C_L = 50$ pF	
		3.0		12	27		35			
		4.5		8.5	20		25			
		6.0		7.5	17		21			
t_{TLH} t_{THL}	Output Transition Time	5.0		3	8			ns	$C_L = 15$ pF	Figures 1, 3
		2.0		25	125		145	ns	$C_L = 50$ pF	
		3.0		16	35		45			
		4.5		11	25		30			
		6.0		9	21		24			
C_{IN}	Input Capacitance	Open		2	10		10	pF		
C_{PD}	Power Dissipation Capacitance	5.0		7				pF	(Note 3)	Figure 2

Note 3: C_{PD} is defined as the value of the internal equivalent capacitance which is derived from dynamic operating current consumption (I_{CCD}) at no output loading and operating at 50% duty cycle. (See Figure 2.) C_{PD} is related to I_{CCD} dynamic operating current by the expression:
$I_{CCD} = (C_{PD})(V_{CC})(f_{IN}) + (I_{CC}static)$.

AC Loading and Waveforms

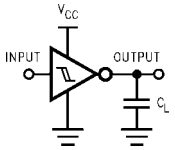

C_L includes load and stray capacitance

Input PRR = 1.0 MHz, t_w = 500 ns

FIGURE 1. AC Test Circuit

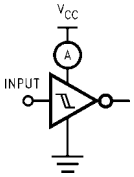

Input = AC Waveforms;

PRR = variable; Duty Cycle = 50%

FIGURE 2. I_{CCD} Test Circuit

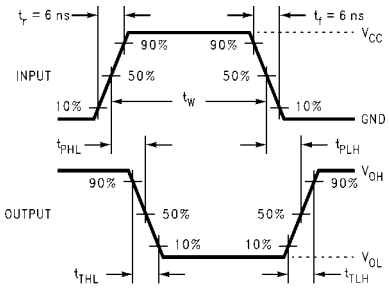

FIGURE 3. AC Waveforms

Tape and Reel Specification

TAPE FORMAT for SC70 and SOT23

Package Designator	Tape Section	Number Cavities	Cavity Status	Cover Tape Status
M5X, P5X	Leader (Start End)	125 (typ)	Empty	Sealed
	Carrier	3000	Filled	Sealed
	Trailer (Hub End)	75 (typ)	Empty	Sealed

TAPE DIMENSIONS inches (millimeters)

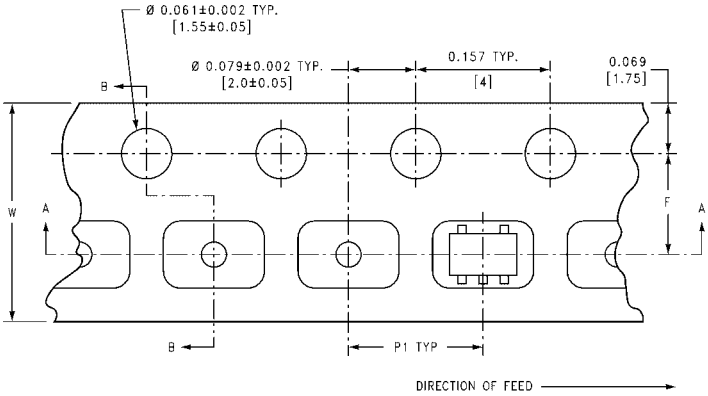

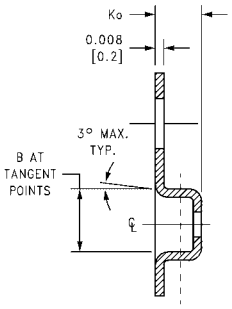

SECTION B–B

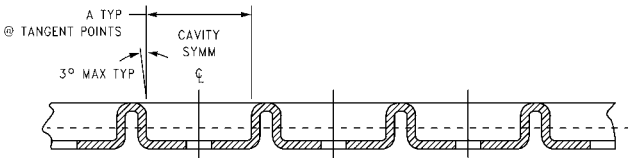

SECTION A–A

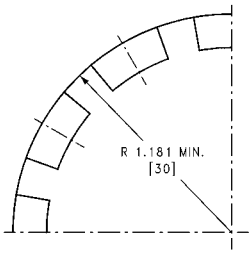

BEND RADIUS NOT TO SCALE

Package	Tape Size	DIM A	DIM B	DIM F	DIM K_o	DIM P1	DIM W
SC70-5	8 mm	0.093 (2.35)	0.096 (2.45)	0.138 ±0.004 (3.5 ±0.10)	0.053 ±0.004 (1.35 ±0.10)	0.157 (4)	0.315 ±0.004 (8 ±0.1)
SOT23-5	8 mm	0.130 (3.3)	0.130 (3.3)	0.138 ±0.002 (3.5 ±0.05)	0.055 ±0.004 (1.4 ±0.11)	0.157 (4)	0.315 ±0.012 (8 ±0.3)

Tape and Reel Specification (Continued)

TAPE FORMAT for MircoPak

Package Designator	Tape Section	Number Cavities	Cavity Status	Cover Tape Status
L6X	Leader (Start End)	125 (typ)	Empty	Sealed
	Carrier	5000	Filled	Sealed
	Trailer (Hub End)	75 (typ)	Empty	Sealed

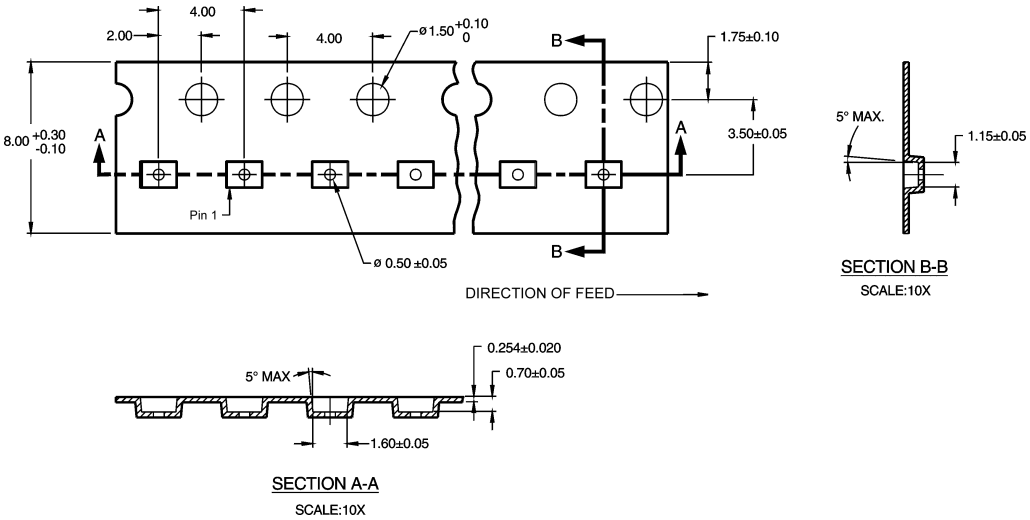

REEL DIMENSIONS inches (millimeters)

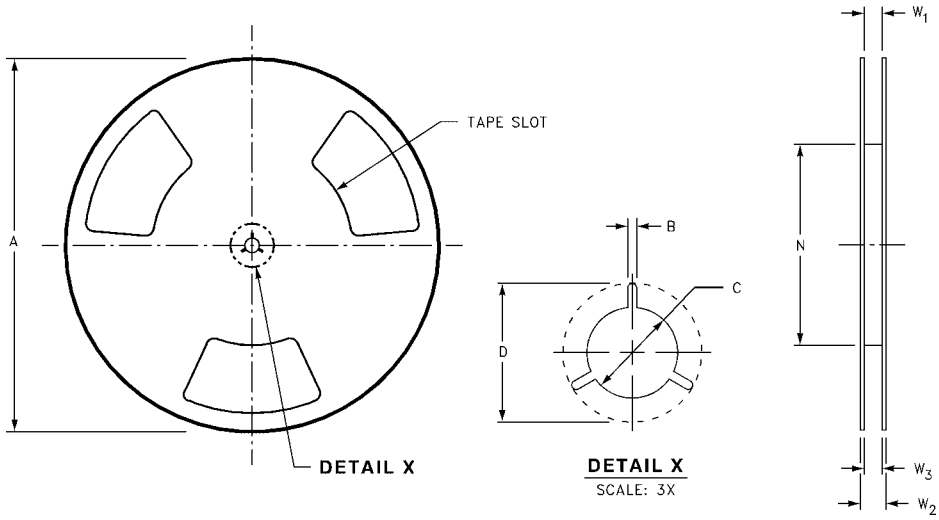

Tape Size	A	B	C	D	N	W1	W2	W3
8 mm	7.0 (177.8)	0.059 (1.50)	0.512 (13.00)	0.795 (20.20)	2.165 (55.00)	0.331 +0.059/–0.000 (8.40 +1.50/–0.00)	0.567 (14.40)	W1 +0.078/–0.039 (W1 +2.00/–1.00)

Physical Dimensions inches (millimeters) unless otherwise noted

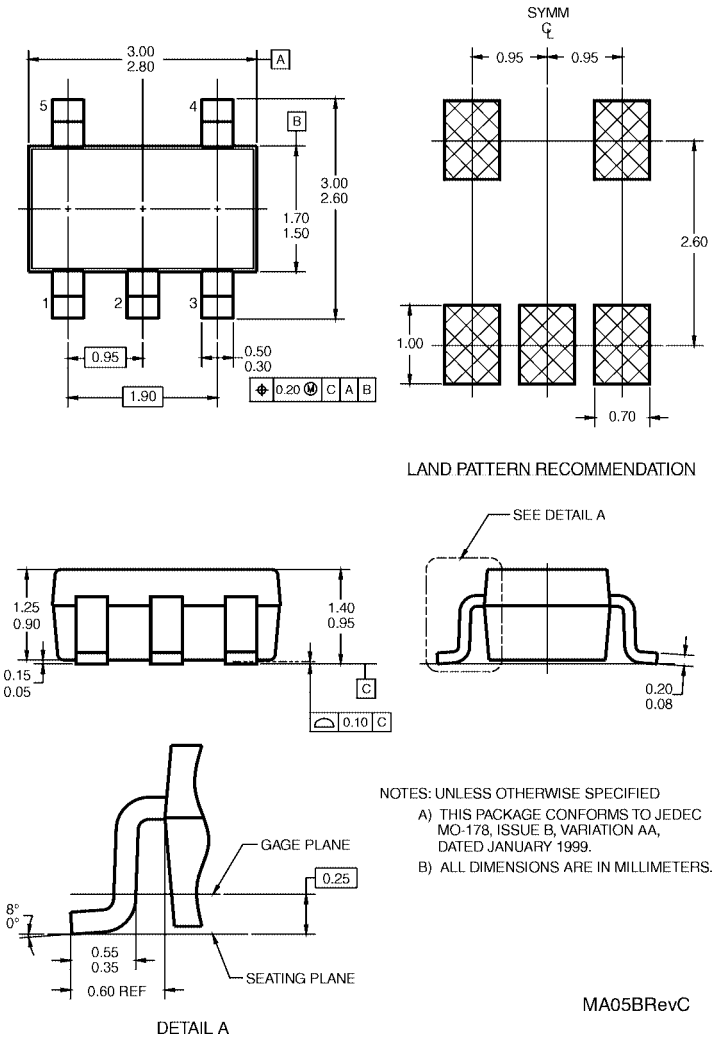

5-Lead SOT23, JEDEC MO-178, 1.6mm
Package Number MA05B

Physical Dimensions inches (millimeters) unless otherwise noted (Continued)

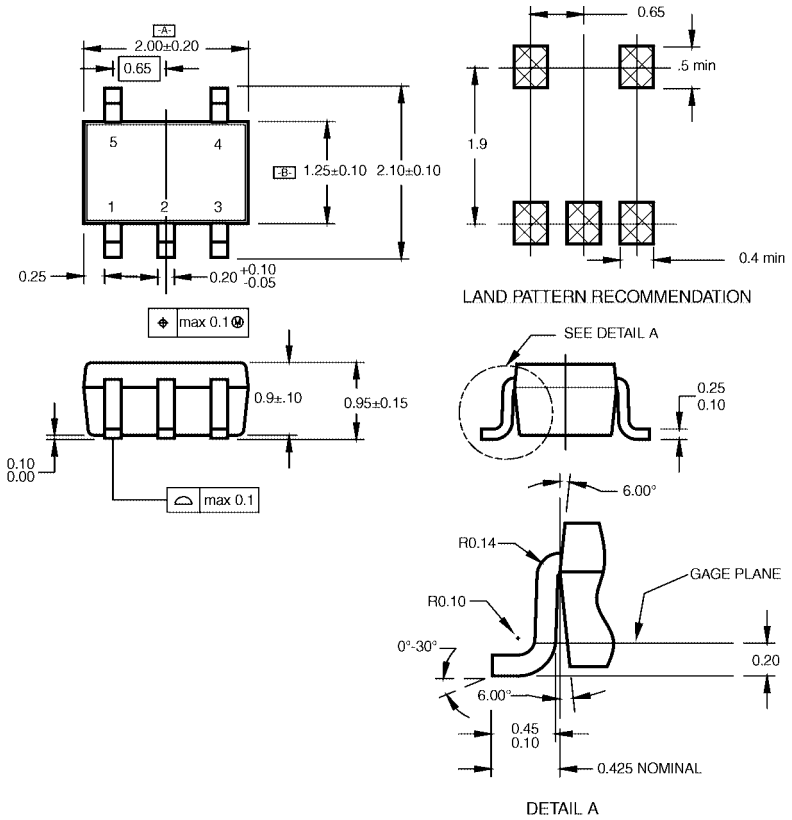

NOTES:

A. CONFORMS TO EIAJ REGISTERED OUTLINE DRAWING SC88A.
B. DIMENSIONS DO NOT INCLUDE BURRS OR MOLD FLASH.
C. DIMENSIONS ARE IN MILLIMETERS.

MAA05ARevC

5-Lead SC70, EIAJ SC-88a, 1.25mm Wide
Package Number MAA05A

Physical Dimensions inches (millimeters) unless otherwise noted (Continued)

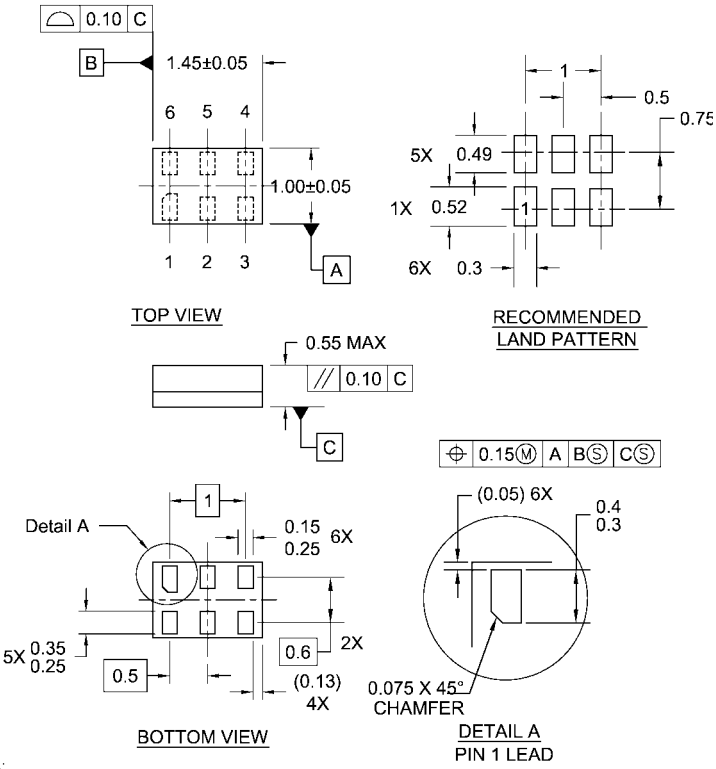

Notes:

1. JEDEC PACKAGE REGISTRATION IS ANTICIPATED
2. DIMENSIONS ARE IN MILLIMETERS
3. DRAWING CONFORMS TO ASME Y14.5M-1994

MAC06ARevB

6-Lead MicroPak, 1.0mm Wide
Package Number MAC06A

ON Semiconductor does not assume any responsibility for use of any circuitry described, no circuit patent licenses are implied and ON Semiconductor reserves the right at any time without notice to change said circuitry and specifications.

LIFE SUPPORT POLICY

ON Semiconductor 'S PRODUCTS ARE NOT AUTHORIZED FOR USE AS CRITICAL COMPONENTS IN LIFE SUPPORT DEVICES OR SYSTEMS WITHOUT THE EXPRESS WRITTEN APPROVAL OF THE PRESIDENT OF ON SEMICONDUCTOR CORPORATION. As used herein:

1. Life support devices or systems are devices or systems which, (a) are intended for surgical implant into the body, or (b) support or sustain life, and (c) whose failure to perform when properly used in accordance with instructions for use provided in the labeling, can be reasonably expected to result in a significant injury to the user.
2. A critical component in any component of a life support device or system whose failure to perform can be reasonably expected to cause the failure of the life support device or system, or to affect its safety or effectiveness.

ON Semiconductor and ON are trademarks of Semiconductor Components Industries, LLC dba ON Semiconductor or its subsidiaries in the United States and/or other countries. ON Semiconductor owns the rights to a number of patents, trademarks, copyrights, trade secrets, and other intellectual property. A listing of ON Semiconductor's product/patent coverage may be accessed at www.onsemi.com/site/pdf/Patent−Marking.pdf. ON Semiconductor reserves the right to make changes without further notice to any products herein. ON Semiconductor makes no warranty, representation or guarantee regarding the suitability of its products for any particular purpose, nor does ON Semiconductor assume any liability arising out of the application or use of any product or circuit, and specifically disclaims any and all liability, including without limitation special, consequential or incidental damages. Buyer is responsible for its products and applications using ON Semiconductor products, including compliance with all laws, regulations and safety requirements or standards, regardless of any support or applications information provided by ON Semiconductor. "Typical" parameters which may be provided in ON Semiconductor data sheets and/or specifications can and do vary in different applications and actual performance may vary over time. All operating parameters, including "Typicals" must be validated for each customer application by customer's technical experts. ON Semiconductor does not convey any license under its patent rights nor the rights of others. ON Semiconductor products are not designed, intended, or authorized for use as a critical component in life support systems or any FDA Class 3 medical devices or medical devices with a same or similar classification in a foreign jurisdiction or any devices intended for implantation in the human body. Should Buyer purchase or use ON Semiconductor products for any such unintended or unauthorized application, Buyer shall indemnify and hold ON Semiconductor and its officers, employees, subsidiaries, affiliates, and distributors harmless against all claims, costs, damages, and expenses, and reasonable attorney fees arising out of, directly or indirectly, any claim of personal injury or death associated with such unintended or unauthorized use, even if such claim alleges that ON Semiconductor was negligent regarding the design or manufacture of the part. ON Semiconductor is an Equal Opportunity/Affirmative Action Employer. This literature is subject to all applicable copyright laws and is not for resale in any manner.

PUBLICATION ORDERING INFORMATION

LITERATURE FULFILLMENT:
Literature Distribution Center for ON Semiconductor
19521 E. 32nd Pkwy, Aurora, Colorado 80011 USA
Phone: 303−675−2175 or 800−344−3860 Toll Free USA/Canada
Fax: 303−675−2176 or 800−344−3867 Toll Free USA/Canada
Email: orderlit@onsemi.com

N. American Technical Support: 800−282−9855 Toll Free USA/Canada
Europe, Middle East and Africa Technical Support:
Phone: 421 33 790 2910
Japan Customer Focus Center
Phone: 81−3−5817−1050

ON Semiconductor Website: **www.onsemi.com**

Order Literature: http://www.onsemi.com/orderlit

For additional information, please contact your local Sales Representative