CATALOG NUMBER	MATERIAL NUMBER	CABLE RANGE	LENGTH "M"	N.P.T. FITTING SIZE	FORM SIZE	UL LISTED	CSA APPROVED
5630M	1300990165	.312-.375 / 7.92-9.53	4.50±0.50 / 114.3±12.7	1/2	2	NO	NO
5631M	1300990167	.375-.437 / 9.53-11.10	5.50±0.50 / 139.7±12.7				
5632M	1300990169	.437-.500 / 11.10-12.70	6.50±0.50 / 165.1±12.7				
5647M	1300990189	.500-.562 / 12.70-14.27	6.75±0.50 / 171.5±12.7				
5648M	1300990190	.562-.625 / 14.27-15.88	6.75±0.50 / 171.5±12.7				
5628M	1300990164	.375-.437 / 9.53-11.10	6.00±0.50 / 152.4±12.7	3/4	3	NO	NO
5633M	1300990171	.437-.562 / 11.10-14.27	6.00±0.50 / 152.4±12.7				
5634M	1300990173	.500-.625 / 12.70-15.88	6.75±0.50 / 171.5±12.7				
5635M	1300990175	.562-.687 / 14.27-17.45	9.00±1.00 / 228.6±25.4				
5640M	1300990185	.625-.750 / 15.88-19.05	9.00±1.00 / 228.6±25.4				
5645M	1300990187	.687-.812 / 17.45-20.62	9.50±1.00 / 241.3±25.4				
5636M	1300990177	.562-.687 / 14.27-17.45	9.00±1.00 / 228.6±25.4	1	4	NO	NO
5637M	1300990179	.625-.750 / 15.88-19.05	9.50±1.00 / 241.3±25.4				
5638M	1300990181	.750-.875 / 19.05-22.23	9.50±1.00 / 241.3±25.4				
5646M	1300990188	.812-.937 / 20.62-23.80	8.75±1.00 / 222.3±25.4				
5639M	1300990183	.875-1.000 / 22.23-25.40	8.75±1.00 / 222.3±25.4				
5590M	1300990138	.875-1.000 / 22.23-25.40	9.00±1.00 / 228.6±25.4	1 1/4	5	NO	NO
5591M	1300990139	1.000-1.125 / 25.40-28.58	9.50±1.00 / 241.3±25.4				
5592M	1300990140	1.125-1.250 / 28.58-31.75	9.50±1.00 / 241.3±25.4				

ASSEMBLED GRIP

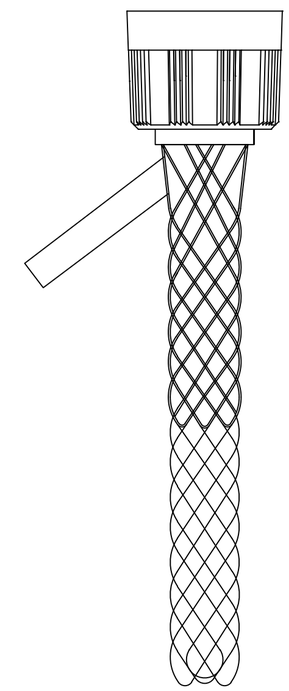

INSTRUCTIONS INCLUDED WITH GRIP

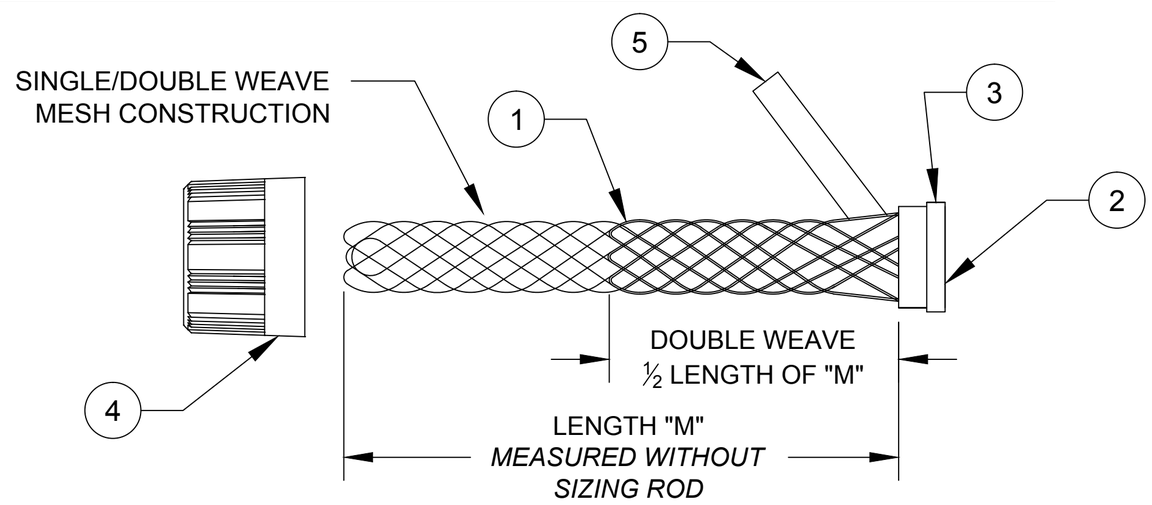

ITEM	DESCRIPTION	MATERIAL
1	WIRE MESH	STAINLESS STEEL
2	INNER RING	STAINLESS STEEL
3	OUTER RING	STAINLESS STEEL
4	COMPRESSION NUT	NYLON (YELLOW)
5	LABEL	MYLAR

RELEASE SALES DWG
EC NO: IPG2014-2068
DRWN: HRUIZ01 2014/10/01
CH'KD: HKNEELAN 2014/10/01
APPR: JFMURPHY 2014/11/18
DESCRIPTION
REV A

QUALITY SYMBOL
▼=0
(C)=0

GENERAL TOLERANCES (UNLESS SPECIFIED)

	mm	INCH
4 PLACES	±---	±---
3 PLACES	±---	±.005
2 PLACES	±.13	±.010
1 PLACE	±.25	±.020

ANGULAR ±1/2°

DRAFT WHERE APPLICABLE MUST REMAIN WITHIN DIMENSIONS

DIMENSION STYLE: INCH/MM
SCALE: NTS
DESIGN UNITS: INCH
THIRD ANGLE PROJECTION

DRAWN BY: HRUIZ01 DATE: 2014/10/01
CHECKED BY: HKNEELAN DATE: 2014/10/01
APPROVED BY: JFMURPHY DATE: 2014/11/18

TITLE: STRAIN RELIEF WATERTITE CORD GRIP METALLIC MESH

molex MOLEX INCORPORATED

MATERIAL NO.: SEE TABLE
DOCUMENT NO.: SD-130099-007
SHEET NO.: 1 0F 1
SIZE: C

THIS DRAWING CONTAINS INFORMATION THAT IS PROPRIETARY TO MOLEX INCORPORATED AND SHOULD NOT BE USED WITHOUT WRITTEN PERMISSION