MATERIAL NO.	ENGINEERING NO.	FINISHED LENGTH
1300070140	208000A01F0301	3 FT (0.91 M)
1300070143	208000A01F0601	6 FT (1.82 M)
1300070146	208000A01F1201	12 FT (3.65 M)
1300070150	208000A01F2001	20 FT (6.09 M)

CABLE LENGTH TOLERANCES
<.3M [1FT]: +19mm-0 [+.75in-0]
.3 - .9M [1 - 3FT]: +44.5mm-0 [+1.75in-0]
.9 - 1.8M [3 - 6FT]: +55.6mm-0 [+2.19in-0]
1.8 - 3.7M [6 - 12FT: +88.9mm-0 [+3.50in-0]
3.7 - 7.3M [12 - 24FT]: +165.1mm-0 [+6.50in-0]
7.3-14.6M [24 - 48FT]: +317.5mm-0 [+12.50in-0]
14.6 - 30.5M [48-100FT]: +622.3mm-0 [+24.50in-0]
OVER 30M [100FT] +2% OF FINISHED LENGTH

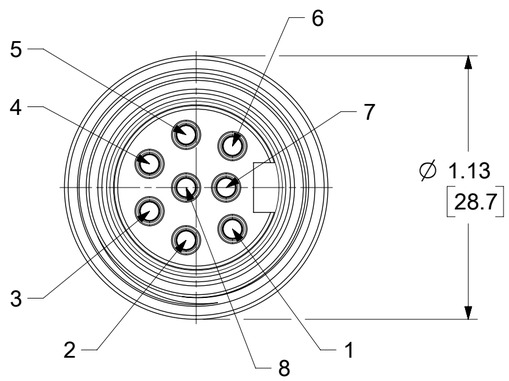

FEMALE FACE VIEW
SCALE: 2X

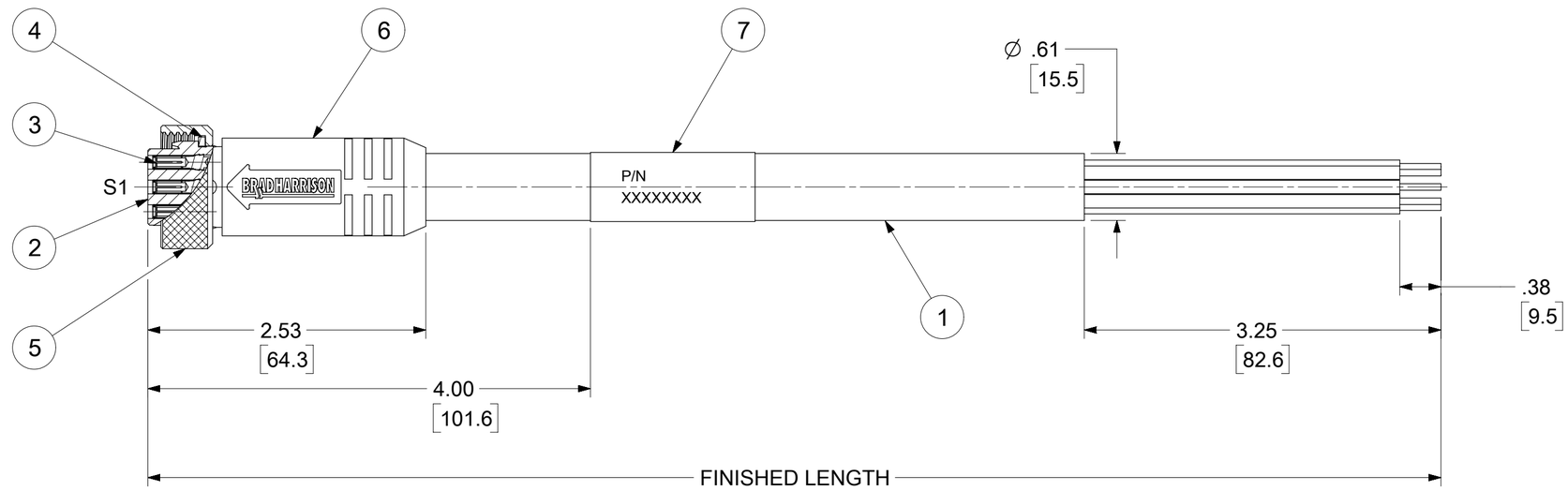

NOTES:
1. MATERIAL: AS NOTED
2. FINISH: AS NOTED
3. ELECTRICAL:
   VOLTAGE: 320V PER IEC60664
   600V PER UL2238
   CURRENT: 7A
4. TEMP RATING: -20°C TO +105°C
5. PROTECTION: IP67 (WHEN MATED)
6. CSA CERTIFIED FILE: LR6837
7. UL RECOGNIZED FILE: E152210
8. ASSEMBLY IS ROHS COMPLIANT
9. ALL DIMS ARE FOR REFERENCE UNLESS TOLERANCED OR NOTED OTHERWISE

WIRING DIAGRAM

S1

1	ORANGE
2	BLUE
3	WHITE/BLACK
4	BLACK
5	WHITE
6	RED
7	GREEN/YELLOW
8	RED/BLACK

PART NUMBER LEGEND

208000A01F0301

COUPLING: ST.STEEL

FINISHED LENGTH
F005=0.5 FT
F020= 2 FT
F200= 20 FT

ITEM	DESCRIPTION	MATERIAL	FINISH
7	LABEL	VINYL	BLACK/YELLOW
6	OVERMOLD	TPE	YELLOW
5	COUPLING NUT	ST.STEEL	PASSIVATED
4	FRICTION RING	NYLON	WHITE
3	SOCKET CONTACT	Cu ALLOY	GOLD OVER NICKEL
2	FEMALE INSERT	TPE	YELLOW
1	CABLE, 16-8, STOOW/ST	PVC JACKET	YELLOW

DOCUMENT STATUS	P1	RELEASE DATE	2022/06/09 17:05:16

FUNCTIONAL SYMBOLS
FA = 0
FC = 0
FP = 0
DIVISIONAL SYMBOLS

THIS DRAWING CONTAINS INFORMATION THAT IS PROPRIETARY TO MOLEX ELECTRONIC TECHNOLOGIES, LLC AND SHOULD NOT BE USED WITHOUT WRITTEN PERMISSION

DIMENSION UNITS: INCH/MM
SCALE: 1:1

GENERAL TOLERANCES (UNLESS SPECIFIED)

	MM	INCH
4 PLACES	±	±
3 PLACES	±	±
2 PLACES	±	±
1 PLACE	±	±
0 PLACES	±	±
ANGULAR TOL	± °	

DRAFT WHERE APPLICABLE MUST REMAIN WITHIN DIMENSIONS

CURRENT REV DESC: INITIAL RELEASE

EC NO: 709518
DRWN: RSTONE 2022/06/06
CHK'D: MZIELINSKI 2022/06/07
APPR: BWOODMAN 2022/06/09

INITIAL REVISION:
DRWN: RSTONE 2022/06/06
APPR: BWOODMAN 2022/06/09

THIRD ANGLE PROJECTION | DRAWING: C-SIZE | SERIES: 130007

molex

MINI CHANGE CORDSET, B SIZE, 8 POLE, SS FEMALE, STRAIGHT, SINGLE KEY, 16 AWG

PRODUCT CUSTOMER DRAWING

DOCUMENT NUMBER	DOC TYPE	DOC PART	REVISION
1300070140	PSD	000	A

MATERIAL NUMBER	CUSTOMER	SHEET NUMBER
SEE TABLE	GENERAL MARKET	1 OF 1

FORMAT: Eng-legs-master-tb-prod-C
REVISION: E
DATE: 2020/01/14