GlobTek, Inc.
www.globtek.com
186 Veterans Drive,
Northvale, NJ 07647
Tel. (201) 784-1000
Fax (201) 784-0111

Drawing Title: GTM96600-6030-R3A, ICT / ITE / Medical Power Supply/Class 2/Household Power Supply, Efficiency Level: USA DOE Level VI / Eco-design Directive 2009/125/EC, (EU) 2019/1782, Case Color/Style: GlobTek Black, Wall Plug-in+Desktop Combination, Regulated Switchmode AC-DC Power Supply AC Adaptor, Input Rating: 100-240V~, 50-60 Hz, IEC 60320/C6 w/ Wall Blades Option , Output Rating: 60W, 30.0V@2.0A, Output Configuration: 1500 mm, 18/2 Cond, Round Black, T-plug system (includes 5.5x2.5, 5.5x2.1, 3.5x1.3mm plugs in each kit), Ferrite: Core size: 17.5*28.5*12.5, GlobTek Black, GT Cord # C30638, Pin Out: Polarity Configuration T00 All plugs are Medical Grade, Locking, Polarized once installed, and single use only. Product demonstration link: https://en.globtek.com/news/t00-changeable-output-plug-system-for-power-supplies MOLDED CONNECTORS AVAILABLE, Blades/Input Cord: R-Series Desktop Insert, Approvals: cULus (12V only); PSE; CB 60335; Fuse 60335; 230V CoC Tier 2; ETL; NRCan (5V only); South Africa; cETLus 60601-1; CB 62368; UKCA; UL 1310; Conforms to 62368-1; Morocco; Korea (21.0V-28.0V Only); NOM (12V only); NOM (5V only); ETL 62368; S-Mark 60950; CB 60950; ETL 60950; Class I; RCM; CCC; CB 60601-1; S-Mark IEC/EN 60601-1; EAC; ETL; CE; China RoHS; Level VI; LPS 60950; RoHS; Ukraine; VCC

Model No. GTM96600-6030-R3A

Part No./Ordering No. RR9LR2000T00CIMR6B | Rev C2

In Addition to GlobTek Inc.'s renewed ISO9001:2015 - Quality Management System Certification, GlobTek Inc. is now certified to:

ISO13485:2016 - Medical Devices Quality Management System Certification
ISO14001:2015 - Environmental Management System Certification

ISO Certificates are available online at https://www.globtek.com/iso-certificates/

The acceptance of this specification and use of the product described in this document indicates the acceptance and binding of the customer to Globtek TERMS AND CONDITIONS (attached to the end of this document), which supersede all other agreements, terms, and conditions (https://en.globtek.com/terms-and-conditions/).

The purchaser of this product (Customer) agrees that it is their sole responsibility to determine suitability/fitness of the product described in this specification for their application and to take precautions for protection against any hazards attendant to the handling and use of the product.

Footnote:

GlobTek Inc. will not be liable for the safety and performance of these power supplies/battery packs if unauthorized access and repair occurs. End user should consult applicable UL, CSA or EN standards for proper installation instruction.

Limitation of Use:

GlobTek products are intended for use with commercial, medical, and/or industrial equipment only. GlobTek product are not authorized for use as mission critical components in life support hazardous environment, nuclear or aircraft applications without prior written approval from the CEO of GlobTek Inc.
Contents of this document are subject to change without prior notice.

Customer Approval of Specification:

Please approve, sign and send back to GlobTek so we can complete order processing.
A delay in receipt of this form will delay delivery schedule.

Company Name:	Customer P/N:
Quote Number:	Date:
Authorized Representative Name:	Authorized Representative Signature:

PROPRIETARY INFORMATION
PROPRIETARY OF GLOBTEK, INC. ANY REPRODUCTION, DISCLOSURE OR USE OF THIS DRAWING, IN WHOLE OR IN PART, IS HEREBY PROHIBITED EXCEPT AS SPECIFIED IN WRITING BY GLOBTEK, INC. © GlobTek, Inc. 2016 - 2022
guest /09/02/2022 10:39:58 AM CLONED FROM GS-1046(R)

REVISION HISTORY

REV	DESCRIPTION	SUB	DATE	APPROVED
C2	Add UKCA approval to the label	QA	11/09/2021	QA
C1	Update label specs to ISO 15223 medical device compliant label, add Morocco approval	QA	05/28/2020	QA
C	Change ferrite core size to 2 pass (1 turn) 17.5*28.5*12.5 mm (from T00/C6724 to T00/C30638)	QA	03/18/2019	QA
B	Update RoHS 2 to RoHS, Ukraine, grounding configuration, add CCC,BOOK,ETL.EAC.RCM	QA	08/29/2018	QA
A	Initial release	rchiu	11/22/2016	QA

POWER SUPPLY INFORMATION

TYPE:	Wall Plug-in+Desktop Combination
TECHNOLOGY:	Regulated Switchmode AC-DC Power Supply AC Adaptor
CASE COLOR:	GlobTek Black
NAMEPLATE RATED INPUT:	100-240V~, 50-60 Hz, 1.5 A
INPUT CONFIG:	IEC 60320/C6 w/ Wall Blades Option
WATTS:	60.0
VOLTS OUT:	30.0
CURRENT OUT (Amps):	2.0
BLADE/CORD INCLUDED:	R-DI R-Series Desktop Insert
BLADE/CORD INSTALLED:	R-DI :R-Series Desktop Insert
INGRESS PROTECTION:	IP40, IP54 Option available
GROUNDING CONFIGURATION:	(E1) Earthed output
EFFICIENCY LEVEL:	USA DOE Level VI / Eco-design Directive 2009/125/EC, (EU) 2019/1782 - Europe Code of Conduct on Energy Efficiency of External Power Supplies - Version 5
OUTPUT CONFIGURATION:	1500 mm, 18/2 Cond, Round Black, T-plug system (includes 5.5x2.5, 5.5x2.1, 3.5x1.3mm plugs in each kit), Ferrite: Core size: 17.5*28.5*12.5, GlobTek Black, GT Cord # C30638
OVERMOLDED:	Yes
OUTPUT CONNECTOR GENDER:	not applicable
CONNECTOR PIN OUT:	Polarity Configuration T00 All plugs are Medical Grade, Locking, Polarized once installed, and single use only. Product demonstration link: https://en.globtek.com/news/t00-changeable-output-plug-system-for-power-supplies MOLDED CONNECTORS AVAILABLE
LABEL SPECS:	ISO 15223 medical device compliant label,L-1470
SPECIAL BARCODE LABEL MATERIAL:	No
PACK SPEC:	Packing for DT (hybrid) model with T00 plug and manual
USER MANUAL:	809-PSURKITUSERMANUAL on A4 paper

PROPRIETARY INFORMATION
PROPRIETARY OF GLOBTEK, INC. ANY REPRODUCTION, DISCLOSURE OR USE OF THIS DRAWING, IN WHOLE OR IN PART, IS HEREBY PROHIBITED EXCEPT AS SPECIFIED IN WRITING BY GLOBTEK, INC. © GlobTek, Inc. 2016 - 2022
guest /09/02/2022 10:39:58 AM CLONED FROM GS-1046(R)

GlobTek, Inc.
www.globtek.com
186 Veterans Drive,
Northvale, NJ 07647
Tel. (201) 784-1000
Fax (201) 784-0111

Drawing Title: GTM96600-6030-R3A, ICT / ITE / Medical Power Supply/Class 2/Household Power Supply, Efficiency Level: USA DOE Level VI / Eco-design Directive 2009/125/EC, (EU) 2019/1782, Case Color/Style: GlobTek Black, Wall Plug-in+Desktop Combination, Regulated Switchmode AC-DC Power Supply AC Adaptor, Input Rating: 100-240V~, 50-60 Hz, IEC 60320/C6 w/ Wall Blades Option , Output Rating: 60W, 30.0V@2.0A, Output Configuration: 1500 mm, 18/2 Cond, Round Black, T-plug system (includes 5.5x2.5, 5.5x2.1, 3.5x1.3mm plugs in each kit), Ferrite: Core size: 17.5*28.5*12.5, GlobTek Black, GT Cord # C30638, Pin Out: Polarity Configuration T00 All plugs are Medical Grade, Locking, Polarized once installed, and single use only. Product demonstration link: https://en.globtek.com/news/t00-changeable-output-plug-system-for-power-supplies MOLDED CONNECTORS AVAILABLE, Blades/Input Cord: R-Series Desktop Insert, Approvals: cULus (12V only); PSE; CB 60335; Fuse 60335; 230V CoC Tier 2; ETL; NRCan (5V only); South Africa; cETLus 60601-1; CB 62368; UKCA; UL 1310; Conforms to 62368-1; Morocco; Korea (21.0V-28.0V Only); NOM (12V only); NOM (5V only); ETL 62368; S-Mark 60950; CB 60950; ETL 60950; Class I; RCM; CCC; CB 60601-1; S-Mark IEC/EN 60601-1; EAC; ETL; CE; China RoHS; Level VI; LPS 60950; RoHS; Ukraine; VCC

Model No. GTM96600-6030-R3A

Part No./Ordering No. RR9LR2000T00CIMR6B | Rev C2

Notes/Modifications/Customizations (notes in this section supersede the values shown in the standard spec):

DIMENSIONS ARE IN MM UNLESS SPECIFIED OTHERWISE.

Â

PROPRIETARY INFORMATION
PROPRIETARY OF GLOBTEK, INC. ANY REPRODUCTION, DISCLOSURE OR USE OF THIS DRAWING, IN WHOLE OR IN PART, IS HEREBY PROHIBITED EXCEPT AS SPECIFIED IN WRITING BY GLOBTEK, INC. © GlobTek, Inc. 2016 - 2022
guest /09/02/2022 10:39:58 AM CLONED FROM GS-1046(R)

ELECTRICAL SPECIFICATIONS

Input

Input Voltage:	Specified: 90-264VAC, Nameplate: 100-240VAC 100% rated load current for 90-264VAC 85% rated load current for 85-264VAC 100% rated load current for 110-370VDC
Input Frequency:	Specified: 47-63Hz, Nameplate: 50-60Hz
No Load Input Power:	<75mW @ 230VAC (EU CoC Tier 2 compliant) for ≤ 49W rating <150mW @ 230VAC (EU CoC Tier 2 compliant) for > 49W rating
Inrush Current:	30A/60A max. (cold start @ 115V/230VAC)
Efficiency:	DoE Level VI and EU CoC Tier 2 compliant

Output

Turn-on Delay:	1 second max. @ 115VAC and full load
Output Regulation:	± 5% (measured at output connector)
Line Regulation:	± 0.5% typ. (measured at output connector)
Ripple:	1% or 100mV, whichever is greater (using a 47μF low-ESR cap + 0.1μF ceramic capacitor, measured @ 20MHz BW, at output connector)
Transient Response:	5% max. deviation, 1ms typ. recovery time (with 40% to 70% load step)
Hold-up Time:	8ms typ. (nominal input voltage and full load)
Power Indicator:	Green LED

Protections

Input Protection:	MOV transient suppressor, input line fusing
Over-Current Protection:	110 - 160% of rated output current, auto-restart, current limit range determined by normal output power rating, not de-rated power rating
Short-Circuit Protection:	Auto-restart
Over-Voltage Protection:	110 - 130%, latched off, cycle AC to reset
Over-Temperature Protection:	On-chip temperature sensor (integrated in primary-side switching controller), shut down at Tj = ~140°C, latched off, cycle AC to reset

Environmental

MTBF:	1,500,000 hours @ 25°C ambient, full load (Telcordia SR-332, Issue 3)
Operating Temperature:	-20°C to 40°C (full load)
Storage Temperature:	-30°C to 80°C

PROPRIETARY INFORMATION
PROPRIETARY OF GLOBTEK, INC. ANY REPRODUCTION, DISCLOSURE OR USE OF THIS DRAWING, IN WHOLE OR IN PART, IS HEREBY PROHIBITED EXCEPT AS SPECIFIED IN WRITING BY GLOBTEK, INC. © GlobTek, Inc. 2016 - 2022
guest /09/02/2022 10:39:58 AM CLONED FROM GS-1046(R)

Humidity:	0% to 95% relative humidity, non-condensing
Altitude:	5000m
Cooling:	Convection
RoHS:	Complies with EU 2011/65/EU and China SJ/T 11363-2006
Note 1:	Regarding operating temperature a. See below de-rating table for output power capability at alternate temperature b. Extended low-end temperature range available as a custom option

Safety

Dielectric Withstand Voltage:	4000VAC or 5656VDC from input to output 3000VAC or 4242VDC from input to earth (Class I models only)
Touch Current:	Class I: 20µA max. Class II: 85µA max. Class II F2: 20µA max.
Earth Leakage Current	Class I: 300µA max. Class II: N/A
Means of Protection:	2 x MOPP
Output Isolation Options:	Class I: C6 or C14 inlet (output negative tied to Earth contact) Class II: C8 or C18 inlet Class II FE: C6 or C14 inlet (output isolated from Earth contact) Review isolation options by reading our white paper PSU Isolation and Identity.
Earth Continuity Test:	< 0.1Ω between earth pin (on AC inlet) and PCB termination point (Class I models only)
Compliant Standards:	See listing at end of this datasheet for specific standards

EMC

Applicable Standards:	Medical: EN60601-1-2, 4th edition Emissions: EN55032, EN61000-6-3, EN61000-6-4, CISPR11, CISPR22 Immunity: EN55024, EN61000-6-1, EN61000-6-2
Conducted Emissions:	Class B, FCC Part 15, Class B (with resistive load)
Radiated Emissions:	Class B, FCC Part 15, Class B (with resistive load)
Harmonic Current Voltage Distortion:	EN61000-3-2, Class A
Voltage Fluctuations/Flicker:	EN61000-3-3
Electrostatic Discharge (ESD) Immunity:	EN61000-4-2, 10KV contact discharge, 20KV air discharge
Radiated RF Immunity:	EN61000-4-3, 10V/m 80-1000MHz, 3V/m 1-2.7GHz, 80% 1KHz AM
EFT/Burst Immunity:	EN61000-4-4, 4KV/100kHz.
Line Surge Immunity:	EN61000-4-5, 2KV differential, 4KV common-mode
Conducted RF Immunity:	EN61000-4-6, 3VRMS, 80% 1KHz AM
Power Frequency Magnetic Field Immunity:	EN61000-4-8, 3A/m
Voltage Dip Immunity:	EN61000-4-11

PROPRIETARY INFORMATION
PROPRIETARY OF GLOBTEK, INC. ANY REPRODUCTION, DISCLOSURE OR USE OF THIS DRAWING, IN WHOLE OR IN PART, IS HEREBY PROHIBITED EXCEPT AS SPECIFIED IN WRITING BY GLOBTEK, INC. © GlobTek, Inc. 2016 - 2022
guest /09/02/2022 10:39:58 AM CLONED FROM GS-1046(R)

Enclosure

Housing:	High impact plastic, 94V0 polycarbonate, non-vented
AC Input Mechanical Options:	Desktop: C6, C7, C14, or C18 inlet Hybrid: Desktop inlet or changeable blades for wall-plug-in style, Class I or Class II input
Markings:	Label and/or pad printed and/or laser-etched into case

Special Options

1. Removal of LED (cost reduction or aesthetic purpose)
2. Custom cordsets, various cordage types, and connector types
3. Custom markings
4. Short term output surge capability for motors or other high peak current loads. (Available up to 120W for 1 second at nameplate voltage range. Higher levels possible for limited input voltage range, or larger allowed voltage dip.)
5. Reduced leakage current
6. Tightened output voltage tolerance
7. Reduced output ripple level
8. Reduced output power rating
9. High reliability PCB laminate with plated through-holes for IPC610 Class 2 compliance
10. Low temperature option, down to -40°C
11. Special housing and cordset colors
12. "Back EMF" upgrade, for motor loads and other high inductance applications with reverse energy flow requirements
13. Improved ingress protection (IP) rating

Output Connectors

- Several output connector options are available with various output current ratings. GlobTek can supply 10A rated 2.1mm and 2.5mm style DC Power Jacks, to complement our 10A output rated 2.1mm and 2.5mm DC power plugs used on our output cordsets.
- Please visit our real-time listing of mating connector product offering: https://en.globtek.com/news/high-current-coaxial-barrel-plug-jacks-for-high-wattage-power-supplies

TO ADDRESS SYSTEM-LEVEL EMI CONCERNS, FERRITE CHOKES/BEADS MAY BE ADDED/REVISED UPON REQUEST. A SAMPLE KIT OF GLOBTEK'S STANDARD FERRITES IS AVAILABLE UNDER GLOBTEK P/N: EMI-MITIGATION-KIT1

FOR ADDITIONAL INFORMATION, PLEASE READ OUR WHITE PAPER AT:
https://en.globtek.com/technical-articles/ferrite-kit-radiated-emi-suppression-kit-for-globtek-power-supplies-cable-assemblies

INGRESS PROTECTION: IP40, IP54 Option available

PROPRIETARY INFORMATION
PROPRIETARY OF GLOBTEK, INC. ANY REPRODUCTION, DISCLOSURE OR USE OF THIS DRAWING, IN WHOLE OR IN PART, IS HEREBY PROHIBITED EXCEPT AS SPECIFIED IN WRITING BY GLOBTEK, INC. © GlobTek, Inc. 2016 - 2022
guest /09/02/2022 10:39:58 AM CLONED FROM GS-1046(R)

GlobTek, Inc.
www.globtek.com
186 Veterans Drive,
Northvale, NJ 07647
Tel. (201) 784-1000
Fax (201) 784-0111

Drawing Title: GTM96600-6030-R3A, ICT / ITE / Medical Power Supply/Class 2/Household Power Supply, Efficiency Level: USA DOE Level VI / Eco-design Directive 2009/125/EC, (EU) 2019/1782, Case Color/Style: GlobTek Black, Wall Plug-in+Desktop Combination, Regulated Switchmode AC-DC Power Supply AC Adaptor, Input Rating: 100-240V~, 50-60 Hz, IEC 60320/C6 w/ Wall Blades Option , Output Rating: 60W, 30.0V@2.0A, Output Configuration: 1500 mm, 18/2 Cond, Round Black, T-plug system (includes 5.5x2.5, 5.5x2.1, 3.5x1.3mm plugs in each kit), Ferrite: Core size: 17.5*28.5*12.5, GlobTek Black, GT Cord # C30638, Pin Out: Polarity Configuration T00 All plugs are Medical Grade, Locking, Polarized once installed, and single use only. Product demonstration link: https://en.globtek.com/news/t00-changeable-output-plug-system-for-power-supplies MOLDED CONNECTORS AVAILABLE, Blades/Input Cord: R-Series Desktop Insert, Approvals: cULus (12V only); PSE; CB 60335; Fuse 60335; 230V CoC Tier 2; ETL; NRCan (5V only); South Africa; cETLus 60601-1; CB 62368; UKCA; UL 1310; Conforms to 62368-1; Morocco; Korea (21.0V-28.0V Only); NOM (12V only); NOM (5V only); ETL 62368; S-Mark 60950; CB 60950; ETL 60950; Class I; RCM; CCC; CB 60601-1; S-Mark IEC/EN 60601-1; EAC; ETL; CE; China RoHS; Level VI; LPS 60950; RoHS; Ukraine; VCC

Model No. GTM96600-6030-R3A

Part No./Ordering No. RR9LR2000T00CIMR6B | Rev C2

3D File Download https://www.globtek.com/dl/GTM96600-R3.igs

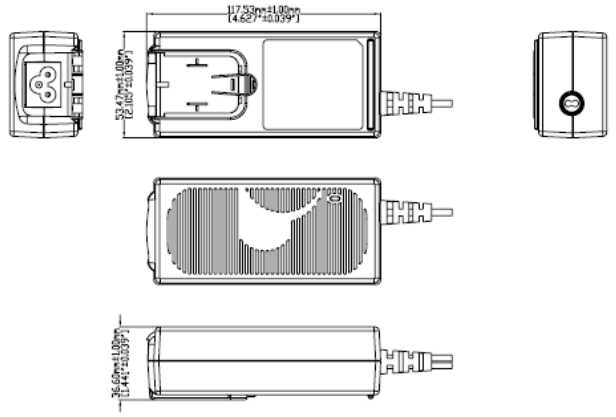

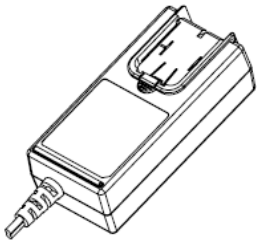

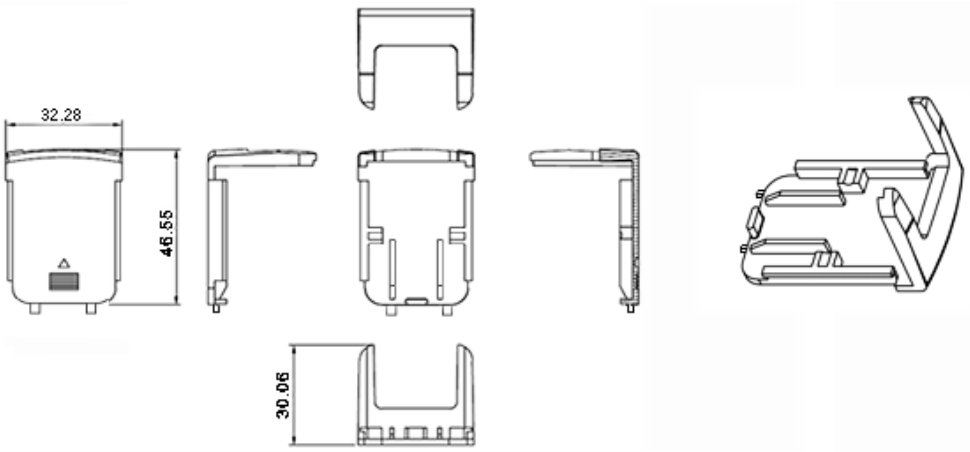

Unit shipped without an installed input plug.

"Desktop insert" installed.

PROPRIETARY INFORMATION
PROPRIETARY OF GLOBTEK, INC. ANY REPRODUCTION, DISCLOSURE OR USE OF THIS DRAWING, IN WHOLE OR IN PART, IS HEREBY PROHIBITED EXCEPT AS SPECIFIED IN WRITING BY GLOBTEK, INC. © GlobTek, Inc. 2016 - 2022
guest /09/02/2022 10:39:58 AM CLONED FROM GS-1046(R)

DERATING CURVE

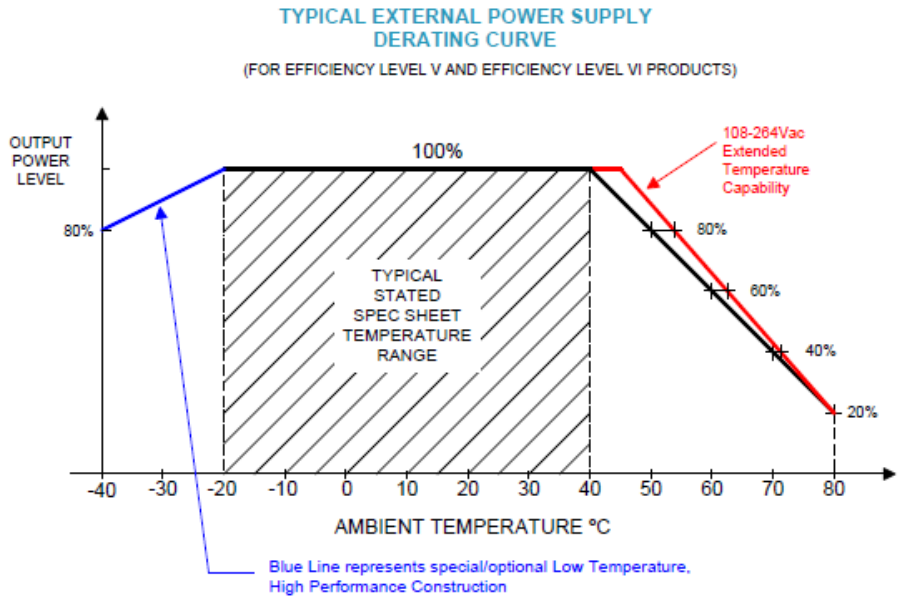

+74C operation with an output power of 19.2W; and cold start at -40C

PROPRIETARY INFORMATION
PROPRIETARY OF GLOBTEK, INC. ANY REPRODUCTION, DISCLOSURE OR USE OF THIS DRAWING, IN WHOLE OR IN PART, IS HEREBY PROHIBITED EXCEPT AS SPECIFIED IN WRITING BY GLOBTEK, INC. © GlobTek, Inc. 2016 - 2022
guest /09/02/2022 10:39:58 AM CLONED FROM GS-1046(R)

GlobTek, Inc.
www.globtek.com
186 Veterans Drive,
Northvale, NJ 07647
Tel. (201) 784-1000
Fax (201) 784-0111

Drawing Title: GTM96600-6030-R3A, ICT / ITE / Medical Power Supply/Class 2/Household Power Supply, Efficiency Level: USA DOE Level VI / Eco-design Directive 2009/125/EC, (EU) 2019/1782, Case Color/Style: GlobTek Black, Wall Plug-in+Desktop Combination, Regulated Switchmode AC-DC Power Supply AC Adaptor, Input Rating: 100-240V~, 50-60 Hz, IEC 60320/C6 w/ Wall Blades Option , Output Rating: 60W, 30.0V@2.0A, Output Configuration: 1500 mm, 18/2 Cond, Round Black, T-plug system (includes 5.5x2.5, 5.5x2.1, 3.5x1.3mm plugs in each kit), Ferrite: Core size: 17.5*28.5*12.5, GlobTek Black, GT Cord # C30638, Pin Out: Polarity Configuration T00 All plugs are Medical Grade, Locking, Polarized once installed, and single use only. Product demonstration link: https://en.globtek.com/news/t00-changeable-output-plug-system-for-power-supplies MOLDED CONNECTORS AVAILABLE, Blades/Input Cord: R-Series Desktop Insert, Approvals: cULus (12V only); PSE; CB 60335; Fuse 60335; 230V CoC Tier 2; ETL; NRCan (5V only); South Africa; cETLus 60601-1; CB 62368; UKCA; UL 1310; Conforms to 62368-1; Morocco; Korea (21.0V-28.0V Only); NOM (12V only); NOM (5V only); ETL 62368; S-Mark 60950; CB 60950; ETL 60950; Class I; RCM; CCC; CB 60601-1; S-Mark IEC/EN 60601-1; EAC; ETL; CE; China RoHS; Level VI; LPS 60950; RoHS; Ukraine; VCC

Model No. GTM96600-6030-R3A

Part No./Ordering No. RR9LR2000T00CIMR6B | Rev C2

INPUT CONFIGURATION

(E1) Earthed output

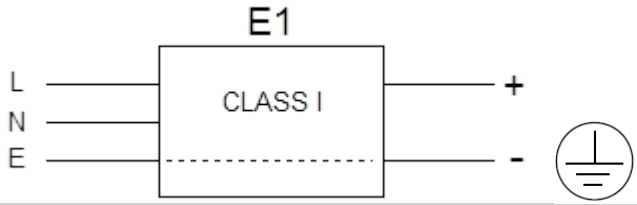

Alternate grounding configurations available upon request.

Blades/Cord Included:R-DI:R-Series Desktop Insert

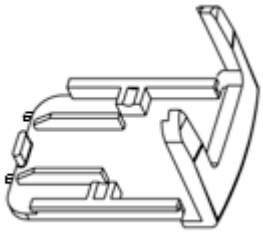

Desktop Insert Installed

Blades/Cord Installed:R-DI:R-Series Desktop Insert

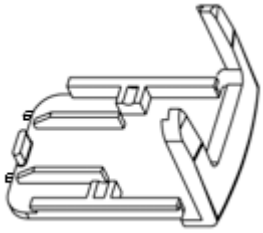

Desktop Insert Installed

IEC 60320/C6 AC Inlet Connector, Class I, Earth Ground (aka "Mickey Mouse")

PROPRIETARY INFORMATION
PROPRIETARY OF GLOBTEK, INC. ANY REPRODUCTION, DISCLOSURE OR USE OF THIS DRAWING, IN WHOLE OR IN PART, IS HEREBY PROHIBITED EXCEPT AS SPECIFIED IN WRITING BY GLOBTEK, INC. © GlobTek, Inc. 2016 - 2022
guest /09/02/2022 10:39:58 AM CLONED FROM GS-1046(R)

Blade Insertion Instructions

R-Blade Style Instruction Video

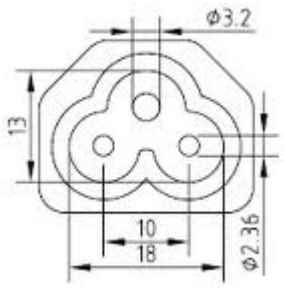

Mates with IEC 60320/C5 Plug

This series of Interchangeable Blade products may be used with Proprietary Interchangeable Blades as described below or with standard international power cords.

Optional INPUT BLADES: R-Socket: below are available blades configurations which are "not included" (unless stated above); may be purchased separately, packaged with power supply, or as a separate "R-KIT" if specified

1. Class I model NEMA 5-15P (Type B), Class I AC power plug with 2 blades & ground pin, R-NA-3(R)
2. Australian AS 3112 (Type I) configuration: SAA 3 pins Class I, R-SAA-3(R)
3. UK BS 1363 (Type G) configuration: UK 3 pins (Ground) Class I, R-UK-3(R)
4. European CEE 7/7 (Type E and F) configuration: European plug 2 PINS + ground, Class I, R-EU-3(R)
5. Desktop Insert

Kits

05. R-KIT-3(R) 1,2,3,4 above
06. R-KIT-3-INTL(R): 2,3,4 above

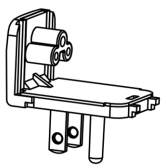

UL 3P
P/N: R-NA-3(R)
NORTH AMERICA
JAPAN

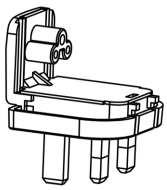

UK 3P
P/N: R-UK-3(R)
UNITED KINGDOM
HONG KONG
SINGAPORE

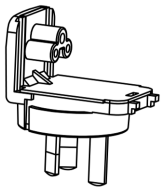

AUS 3P
P/N: R-SAA-3(R)
AUSTRALIA

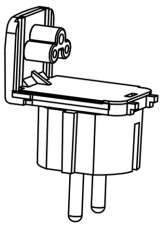

EU 3P
P/N: R-EU-3(R)
EUROPE
SOUTH AMERICA

Below are standard cordsets which are "not included" (unless stated above); these can be purchased separately or package with the power supply. Contact your Sales Engineer if the style required is not shown below. Many more available in different lengths, colors or cable material.

Standard International IEC 320/C5 Cordsets

PROPRIETARY INFORMATION

PROPRIETARY OF GLOBTEK, INC. ANY REPRODUCTION, DISCLOSURE OR USE OF THIS DRAWING, IN WHOLE OR IN PART, IS HEREBY PROHIBITED EXCEPT AS SPECIFIED IN WRITING BY GLOBTEK, INC. © GlobTek, Inc. 2016 - 2022

guest /09/02/2022 10:39:58 AM CLONED FROM GS-1046(R)

GlobTek, Inc.
www.globtek.com
186 Veterans Drive,
Northvale, NJ 07647
Tel. (201) 784-1000
Fax (201) 784-0111

Drawing Title: GTM96600-6030-R3A, ICT / ITE / Medical Power Supply/Class 2/Household Power Supply, Efficiency Level: USA DOE Level VI / Eco-design Directive 2009/125/EC, (EU) 2019/1782, Case Color/Style: GlobTek Black, Wall Plug-in+Desktop Combination, Regulated Switchmode AC-DC Power Supply AC Adaptor, Input Rating: 100-240V~, 50-60 Hz, IEC 60320/C6 w/ Wall Blades Option , Output Rating: 60W, 30.0V@2.0A, Output Configuration: 1500 mm, 18/2 Cond, Round Black, T-plug system (includes 5.5x2.5, 5.5x2.1, 3.5x1.3mm plugs in each kit), Ferrite: Core size: 17.5*28.5*12.5, GlobTek Black, GT Cord # C30638, Pin Out: Polarity Configuration T00 All plugs are Medical Grade, Locking, Polarized once installed, and single use only. Product demonstration link: https://en.globtek.com/news/t00-changeable-output-plug-system-for-power-supplies MOLDED CONNECTORS AVAILABLE, Blades/Input Cord: R-Series Desktop Insert, Approvals: cULus (12V only); PSE; CB 60335; Fuse 60335; 230V CoC Tier 2; ETL; NRCan (5V only); South Africa; cETLus 60601-1; CB 62368; UKCA; UL 1310; Conforms to 62368-1; Morocco; Korea (21.0V-28.0V Only); NOM (12V only); NOM (5V only); ETL 62368; S-Mark 60950; CB 60950; ETL 60950; Class I; RCM; CCC; CB 60601-1; S-Mark IEC/EN 60601-1; EAC; ETL; CE; China RoHS; Level VI; LPS 60950; RoHS; Ukraine; VCC

Model No. GTM96600-6030-R3A

Part No./Ordering No. RR9LR2000T00CIMR6B | Rev C2

Part Number / Link	Country	Plug	Connector	Length (mm)	Length (ft)
3021066F712(R)	N. American (Type B)	NEMA 5-15P	IEC 320/C5	1880	6
1191068F0712(R)	N. American (Type B)	NEMA 5-15P Hospital	IEC 320/C5	2459	8
2194262M0712(R)	Argentina (Type I)	IRAM 2073	IEC320/C5	2050	6.7
2064262M0712(R)	Australian (Type I)	AS3112 / 3 PRONG	IEC 320/C5	2000	6.6
204B4262M0712(R)	Brazil (Type N)	BRAZIL	IEC 320/C5	2000	6.6
6023592M5712(R)	China (Type I)	CCC GR2099	IEC 320/C5	2500	8
23144262M0712(R)	Europe (Type E)	CEE 7/7	IEC 320/C5	2050	6.6
2313K3432M0712(R)	Korea (Type F)	KS C 8305	IEC 320/C5	2000	6.6
205IN4262M0712(R)	India (Type D)	India IS 1293 (also known as IA16A3 or BS546)	IEC320/C5	2000	6.6
377C4262M0712(R)	Israel (Type H)	ISL	IEC320/C5	2050	6.7
23024262M0712(R)	Italy (Type L)	CEI 23-16/VII	IEC 320/C5	2000	6.6
3003316F0712(R)	Japan (Type B)	JIS 8303 / 3 PINS	IEC 320/C5	1830	6
3021066F0712ULPSE(R)	Japan / USA (Type B)	JIS 8303 / 3 PINS + NEMA 5-15P	IEC 320/C5	1830	6
2054262M0712(R)	S. Africa (Type D)	South Africa SABS164-1 (6A type plug)	IEC320/C5	2050	6.7
2084262M0712(R)	S.Africa (Type M)	South Africa SABS164-1 (16A type plug)	IEC 320/C5	2000	6.6
23214262M0712(R)	Switzerland (Type J)	SEV 1011 (EL 203)	IEC 320/C5	2000	6.6
3003316F0712(R)	Taiwan (Type B)	BSMI	IEC 320/C5	2000	6.6
6104262M0712(R)	UK, Hong Kong, Singapore, Gulf States (Type G)	BS1363	IEC 320/C5	2000	6.6

PROPRIETARY INFORMATION
PROPRIETARY OF GLOBTEK, INC. ANY REPRODUCTION, DISCLOSURE OR USE OF THIS DRAWING, IN WHOLE OR IN PART, IS HEREBY PROHIBITED EXCEPT AS SPECIFIED IN WRITING BY GLOBTEK, INC. © GlobTek, Inc. 2016 - 2022
guest /09/02/2022 10:39:58 AM CLONED FROM GS-1046(R)

GlobTek, Inc.
www.globtek.com
186 Veterans Drive,
Northvale, NJ 07647
Tel. (201) 784-1000
Fax (201) 784-0111

Drawing Title: GTM96600-6030-R3A, ICT / ITE / Medical Power Supply/Class 2/Household Power Supply, Efficiency Level: USA DOE Level VI / Eco-design Directive 2009/125/EC, (EU) 2019/1782, Case Color/Style: GlobTek Black, Wall Plug-in+Desktop Combination, Regulated Switchmode AC-DC Power Supply AC Adaptor, Input Rating: 100-240V~, 50-60 Hz, IEC 60320/C6 w/ Wall Blades Option , Output Rating: 60W, 30.0V@2.0A, Output Configuration: 1500 mm, 18/2 Cond, Round Black, T-plug system (includes 5.5x2.5, 5.5x2.1, 3.5x1.3mm plugs in each kit), Ferrite: Core size: 17.5*28.5*12.5, GlobTek Black, GT Cord # C30638, Pin Out: Polarity Configuration T00 All plugs are Medical Grade, Locking, Polarized once installed, and single use only. Product demonstration link: https://en.globtek.com/news/t00-changeable-output-plug-system-for-power-supplies MOLDED CONNECTORS AVAILABLE, Blades/Input Cord: R-Series Desktop Insert, Approvals: cULus (12V only); PSE; CB 60335; Fuse 60335; 230V CoC Tier 2; ETL; NRCan (5V only); South Africa; cETLus 60601-1; CB 62368; UKCA; UL 1310; Conforms to 62368-1; Morocco; Korea (21.0V-28.0V Only); NOM (12V only); NOM (5V only); ETL 62368; S-Mark 60950; CB 60950; ETL 60950; Class I; RCM; CCC; CB 60601-1; S-Mark IEC/EN 60601-1; EAC; ETL; CE; China RoHS; Level VI; LPS 60950; RoHS; Ukraine; VCC

Model No. GTM96600-6030-R3A

Part No./Ordering No. RR9LR2000T00CIMR6B | Rev C2

PROPRIETARY INFORMATION
PROPRIETARY OF GLOBTEK, INC. ANY REPRODUCTION, DISCLOSURE OR USE OF THIS DRAWING, IN WHOLE OR IN PART, IS HEREBY PROHIBITED EXCEPT AS SPECIFIED IN WRITING BY GLOBTEK, INC. © GlobTek, Inc. 2016 - 2022
guest /09/02/2022 10:39:58 AM CLONED FROM GS-1046(R)

GlobTek, Inc.
www.globtek.com
186 Veterans Drive,
Northvale, NJ 07647
Tel. (201) 784-1000
Fax (201) 784-0111

Drawing Title: GTM96600-6030-R3A, ICT / ITE / Medical Power Supply/Class 2/Household Power Supply, Efficiency Level: USA DOE Level VI / Eco-design Directive 2009/125/EC, (EU) 2019/1782, Case Color/Style: GlobTek Black, Wall Plug-in+Desktop Combination, Regulated Switchmode AC-DC Power Supply AC Adaptor, Input Rating: 100-240V~, 50-60 Hz, IEC 60320/C6 w/ Wall Blades Option , Output Rating: 60W, 30.0V@2.0A, Output Configuration: 1500 mm, 18/2 Cond, Round Black, T-plug system (includes 5.5x2.5, 5.5x2.1, 3.5x1.3mm plugs in each kit), Ferrite: Core size: 17.5*28.5*12.5, GlobTek Black, GT Cord # C30638, Pin Out: Polarity Configuration T00 All plugs are Medical Grade, Locking, Polarized once installed, and single use only. Product demonstration link: https://en.globtek.com/news/t00-changeable-output-plug-system-for-power-supplies MOLDED CONNECTORS AVAILABLE, Blades/Input Cord: R-Series Desktop Insert, Approvals: cULus (12V only); PSE; CB 60335; Fuse 60335; 230V CoC Tier 2; ETL; NRCan (5V only); South Africa; cETLus 60601-1; CB 62368; UKCA; UL 1310; Conforms to 62368-1; Morocco; Korea (21.0V-28.0V Only); NOM (12V only); NOM (5V only); ETL 62368; S-Mark 60950; CB 60950; ETL 60950; Class I; RCM; CCC; CB 60601-1; S-Mark IEC/EN 60601-1; EAC; ETL; CE; China RoHS; Level VI; LPS 60950; RoHS; Ukraine; VCC

Model No. GTM96600-6030-R3A

Part No./Ordering No. RR9LR2000T00CIMR6B | Rev C2

OUTPUT CORD AND CONNECTOR: T00/C30638

ACTUAL CONNECTORS, OVERMOLDS, FERRITES MAY VARY SLIGHTLY FROM THE PICTURE BELOW

CABLE TYPE	Round Black
CABLE LENGTH (mm)	1500
CABLE TOLERANCE (mm)	± 50
WIRE GAUGE (AWG)	18
CONDUCTORS	2
HANK DIMENSION (mm)	80 ± 10
CABLE / CONNECTOR OVERMOLD COLOR	GlobTek Black
FERRITE TYPE / DIMENSION	Core size: 17.5*28.5*12.5
FERRITE # OF TURNS(Definition)	2 Pass thru core (1 turns)
FERRITE DIMENSION FROM STRAIN RELIEF	50±10
FERRITE DIMENSION FROM PLUG	N/A
PLUG TYPE	T-plug system (includes 5.5x2.5, 5.5x2.1, 3.5x1.3mm plugs in each kit)
OUTPUT CONNECTOR GENDER	not applicable
OVERMOLDED	Yes
OVER MOLD ORIENTATION	Straight
CONNECTOR PIN OUT:	Polarity Configuration T00 All plugs are Medical Grade, Locking, Polarized once installed, and single use only. Product demonstration link: https://en.globtek.com/news/t00-changeable-output-plug-system-for-power-supplies MOLDED CONNECTORS AVAILABLE
ADDITIONAL REQUIREMENTS	UL1310 Warning Label Up To 36 Volts with plugs

This novel system allows for rapid shipment of prototype samples or small quantities of common output voltage and current which can fullfill the needs of most common barrel plug specs. The table below explains the standard and non standard options available as part of this system. This system also allows for both Center Positive and Center Negative polarity.

The T00 plug and adapters are Medical Grade, single use only, Polarized after installation, and not removable without use of special tool.

Any of the below options, and more, are available as molded plugs from stock or special order. Please contact GlobTek for more information

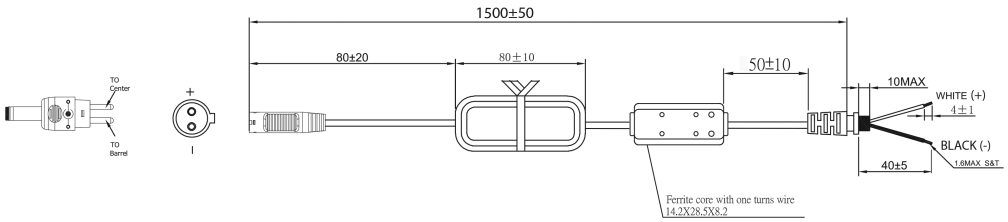

Cable OD 4.8 ± 0.15 mm

PROPRIETARY INFORMATION
PROPRIETARY OF GLOBTEK, INC. ANY REPRODUCTION, DISCLOSURE OR USE OF THIS DRAWING, IN WHOLE OR IN PART, IS HEREBY PROHIBITED EXCEPT AS SPECIFIED IN WRITING BY GLOBTEK, INC. © GlobTek, Inc. 2016 - 2022
guest /09/02/2022 10:39:58 AM CLONED FROM GS-1046(R)

GlobTek, Inc.
www.globtek.com
186 Veterans Drive,
Northvale, NJ 07647
Tel. (201) 784-1000
Fax (201) 784-0111

Drawing Title: GTM96600-6030-R3A, ICT / ITE / Medical Power Supply/Class 2/Household Power Supply, Efficiency Level: USA DOE Level VI / Eco-design Directive 2009/125/EC, (EU) 2019/1782, Case Color/Style: GlobTek Black, Wall Plug-in+Desktop Combination, Regulated Switchmode AC-DC Power Supply AC Adaptor, Input Rating: 100-240V~, 50-60 Hz, IEC 60320/C6 w/ Wall Blades Option , Output Rating: 60W, 30.0V@2.0A, Output Configuration: 1500 mm, 18/2 Cond, Round Black, T-plug system (includes 5.5x2.5, 5.5x2.1, 3.5x1.3mm plugs in each kit), Ferrite: Core size: 17.5*28.5*12.5, GlobTek Black, GT Cord # C30638, Pin Out: Polarity Configuration T00 All plugs are Medical Grade, Locking, Polarized once installed, and single use only. Product demonstration link: https://en.globtek.com/news/t00-changeable-output-plug-system-for-power-supplies MOLDED CONNECTORS AVAILABLE, Blades/Input Cord: R-Series Desktop Insert, Approvals: cULus (12V only); PSE; CB 60335; Fuse 60335; 230V CoC Tier 2; ETL; NRCan (5V only); South Africa; cETLus 60601-1; CB 62368; UKCA; UL 1310; Conforms to 62368-1; Morocco; Korea (21.0V-28.0V Only); NOM (12V only); NOM (5V only); ETL 62368; S-Mark 60950; CB 60950; ETL 60950; Class I; RCM; CCC; CB 60601-1; S-Mark IEC/EN 60601-1; EAC; ETL; CE; China RoHS; Level VI; LPS 60950; RoHS; Ukraine; VCC

Model No. GTM96600-6030-R3A

Part No./Ordering No. RR9LR2000T00CIMR6B | Rev C2

Individual conductor (Black & White) OD value of this 18 AWG cable is 2.0 ± 0.1 mm

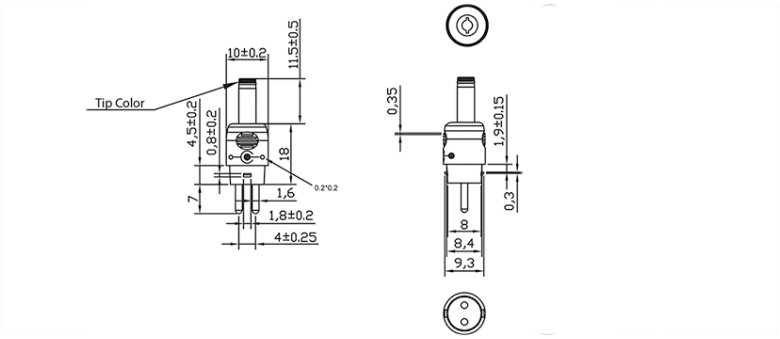

Option upon request: STRAIGHT Female Barrels are available for special order in any length between 9mm-14mm

This novel system allows for rapid shipment of prototype samples or small quantities of common output voltage and current which can fulfill the needs of most common barrel plug as well as male plug specs. The table explains the standard and non-standard options available as part of this system. This system also allows for both Center Positive and Center Negative
polarity.

The T00 plug and adapters are Medical Grade, single use only, Polarized after installation, and not removable without use of special tool.

Please click here and review usage guidance below before use.

Any of the below options, and more, are available as molded plugs from stock or special order. Please contact GlobTek for more information

ADDITIONAL OUTPUT PLUG OPTIONS ARE AVAILABLE AT https://www.globtek.com/connectors/
STANDARD PLUGS AND CONNECTORS CAN BE SEEN ONLINE AT https://www.globtek.com/connectors/
CALCULATE VOLTAGE REGULATION/DROP WITH OUR ONLINE CALCULATOR: https://en.globtek.com/output-cable-regulation-calculator/

PROPRIETARY INFORMATION
PROPRIETARY OF GLOBTEK, INC. ANY REPRODUCTION, DISCLOSURE OR USE OF THIS DRAWING, IN WHOLE OR IN PART, IS HEREBY PROHIBITED EXCEPT AS SPECIFIED IN WRITING BY GLOBTEK, INC. © GlobTek, Inc. 2016 - 2022
guest /09/02/2022 10:39:58 AM CLONED FROM GS-1046(R)

OUTPUT CONNECTOR HOOK UP

TO ADDRESS SYSTEM-LEVEL EMI CONCERNS, FERRITE CHOKES/BEADS MAY BE ADDED/REVISED UPON REQUEST. A SAMPLE KIT OF GLOBTEK'S STANDARD FERRITES IS AVAILABLE UNDER GLOBTEK P/N: EMI-MITIGATION-KIT1

FOR ADDITIONAL INFORMATION, PLEASE READ OUR WHITE PAPER AT:
https://en.globtek.com/technical-articles/ferrite-kit-radiated-emi-suppression-kit-for-globtek-power-supplies-cable-assemblies

PROPRIETARY INFORMATION
PROPRIETARY OF GLOBTEK, INC. ANY REPRODUCTION, DISCLOSURE OR USE OF THIS DRAWING, IN WHOLE OR IN PART, IS HEREBY PROHIBITED EXCEPT AS SPECIFIED IN WRITING BY GLOBTEK, INC. © GlobTek, Inc. 2016 - 2022
guest /09/02/2022 10:39:58 AM CLONED FROM GS-1046(R)

LABEL:L-1470

LABEL P/N:	ISO 15223 medical device compliant label
MATERIAL:	Flat Thermal Transfer, Imprintable, Polyester Label and/or Pad Printed and/or Molded, and/or Laser Engraved in the case
BACKGROUND COLOR:	Black if housing is Black, White or Silver if housing is White or Gray.
TEXT COLOR:	White or Silver if label is Black Background for Black housing. Black if label is White or Silver background and Housing is White or Gray.
LABEL WIDTH (mm):	44.5
LABEL HEIGHT (mm):	49.5
SPECIAL BARCODE LABEL MATERIAL:	No

Below is the minimum information which will appear on the label. NOTE: in the logo area additional/actual positioning of symbols and text is subjected to change as per agency updates/requirements or additional model approvals become available.
Agency logos may be in Regulatory Certifications/Label Markings area on the label or molded into the case housing outside the label area. Information will be shown via Label and/or Pad Printed and/or Molded in the case.

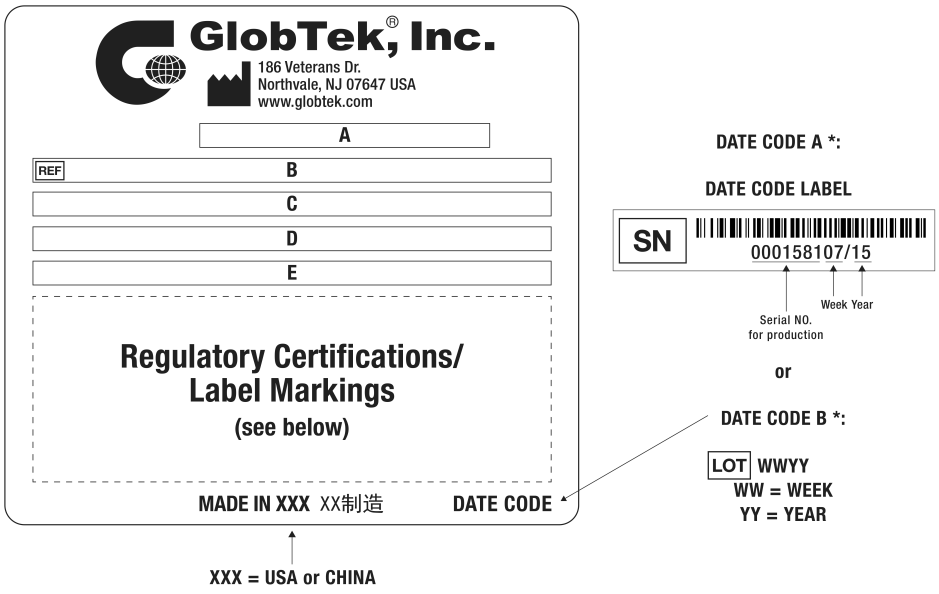

A=ICT / ITE / Medical Power Supply/Class 2/Household Power Supply
B=P/N: (料号) RR9LR2000T00CIMR6B
C=Model (型号) GTM96600-6030-R3A
D=Input (输入)100-240V~, 50-60 Hz, 1.5 A
E=Output (输出)30.0 V ⎓ 2.0 A, 60.0W

PROPRIETARY INFORMATION
PROPRIETARY OF GLOBTEK, INC. ANY REPRODUCTION, DISCLOSURE OR USE OF THIS DRAWING, IN WHOLE OR IN PART, IS HEREBY PROHIBITED EXCEPT AS SPECIFIED IN WRITING BY GLOBTEK, INC. © GlobTek, Inc. 2016 - 2022
guest /09/02/2022 10:39:58 AM CLONED FROM GS-1046(R)

AGENCY ONLINE DOCUMENTS	http://www.globtek.info/certs/GTM96600-TZ/
CE EC-Declaration for Medical	http://globtek.force.com/models/ec_declaration_product?id=01ta0000007cWCv&m=1
CE EC-Declaration for Industrial/Commercial/ITE	http://globtek.force.com/models/ec_declaration_product?id=01ta0000007cWCv&i=2
CE EC-Declaration for Household	http://globtek.force.com/models/ec_declaration_product?id=01ta0000007cWCv&h=2
UKCA-Declaration for Medical	http://globtek.force.com/models/ukca_declaration_product?id=01ta0000007cWCv&m=1
UKCA-Declaration for Industrial/Commercial/ITE	http://globtek.force.com/models/ukca_declaration_product?id=01ta0000007cWCv&i=2
UKCA-Declaration for Household	http://globtek.force.com/models/ukca_declaration_product?id=01ta0000007cWCv&h=2
Morocco SDoC Declaration	https://globtek.secure.force.com/models/Morocco_SDoC_Declaration?id=a0Oa000000Mmj3wEAB
RoHS/RoHS3 Declaration	https://www.globtek.com/pdf/rohs_cert/01ta0000007cWCvAAM
REACH Declaration	https://www.globtek.com/pdf/iso_certificates/REACH.pdf
Conflict Minerals Declaration	https://www.globtek.com/pdf/conflict-minerals.pdf
Prop 65 Statement	https://en.globtek.com/prop-65-statement.pdf

IPXY rating is based on 3rd party testing and customers should check suitability and test system level IPXY rating before ordering.

Regulatory Certifications/Label Markings

Below follows a link to the latest regulatory certifications and marks for this specific product. National standards as well as certification schemes are constantly changing and so is the set of certification marks and symbols applicable to this product. Various standards, marks and symbols, and certificates are subject to change at any time without notice.

Additional standards or unique country certifications are available upon request. Please contact Globtek to request a quotation.

LATEST PRODUCT/MODEL CERTIFICATIONS:	https://www.globtek.com/datasheet/w71109
AGENCY ONLINE DOCUMENTS:	http://www.globtek.info/certs/GTM96600-TZ/
	(E1) Earthed output

Polarity Configuration T00 All plugs are Medical Grade, Locking, Polarized once installed, and single use only.
Product demonstration link: https://en.globtek.com/news/t00-changeable-output-plug-system-for-power-supplies
MOLDED CONNECTORS AVAILABLE

PROPRIETARY INFORMATION
PROPRIETARY OF GLOBTEK, INC. ANY REPRODUCTION, DISCLOSURE OR USE OF THIS DRAWING, IN WHOLE OR IN PART, IS HEREBY PROHIBITED EXCEPT AS SPECIFIED IN WRITING BY GLOBTEK, INC. © GlobTek, Inc. 2016 - 2022
guest /09/02/2022 10:39:58 AM CLONED FROM GS-1046(R)

PACKAGING

Packing Spec P/N:	Packing for DT (hybrid) model with T00 plug and manual
Box Qty:	45
Gift Box Size (mm):	142*60*80
Gift Box Color:	White
Master Carton Size (mm):	442 x 330 x 275
Master Carton Cubic Volume (m^3):	0.04
Master GW (Kg):	18.2 kg
BLADES INCLUDED:	R-DI: R-Series Desktop Insert
BLADE/CORD INSTALLED:	R-DI: R-Series Desktop Insert
USER MANUAL*:	809-PSURKITUSERMANUAL on A4 paper
USER MANUAL WEB LINK:	https://www.globtek.com/pdf/809-PSURKITUSERMANUAL.jpg

* This specification sheet is considered the user manual for all applications. It is expected that the buyer of this product will use it to formulate their own user manual for their end product and a user manual specifically for the power adapter is not usually required. If a user manual is not specifically listed above then none will be provided with this unit.

PROPRIETARY INFORMATION
PROPRIETARY OF GLOBTEK, INC. ANY REPRODUCTION, DISCLOSURE OR USE OF THIS DRAWING, IN WHOLE OR IN PART, IS HEREBY PROHIBITED EXCEPT AS SPECIFIED IN WRITING BY GLOBTEK, INC. © GlobTek, Inc. 2016 - 2022
guest /09/02/2022 10:39:58 AM CLONED FROM GS-1046(R)

GlobTek, Inc.
www.globtek.com
186 Veterans Drive,
Northvale, NJ 07647
Tel. (201) 784-1000
Fax (201) 784-0111

Drawing Title: GTM96600-6030-R3A, ICT / ITE / Medical Power Supply/Class 2/Household Power Supply, Efficiency Level: USA DOE Level VI / Eco-design Directive 2009/125/EC, (EU) 2019/1782, Case Color/Style: GlobTek Black, Wall Plug-in+Desktop Combination, Regulated Switchmode AC-DC Power Supply AC Adaptor, Input Rating: 100-240V~, 50-60 Hz, IEC 60320/C6 w/ Wall Blades Option , Output Rating: 60W, 30.0V@2.0A, Output Configuration: 1500 mm, 18/2 Cond, Round Black, T-plug system (includes 5.5x2.5, 5.5x2.1, 3.5x1.3mm plugs in each kit), Ferrite: Core size: 17.5*28.5*12.5, GlobTek Black, GT Cord # C30638, Pin Out: Polarity Configuration T00 All plugs are Medical Grade, Locking, Polarized once installed, and single use only. Product demonstration link: https://en.globtek.com/news/t00-changeable-output-plug-system-for-power-supplies MOLDED CONNECTORS AVAILABLE, Blades/Input Cord: R-Series Desktop Insert, Approvals: cULus (12V only); PSE; CB 60335; Fuse 60335; 230V CoC Tier 2; ETL; NRCan (5V only); South Africa; cETLus 60601-1; CB 62368; UKCA; UL 1310; Conforms to 62368-1; Morocco; Korea (21.0V-28.0V Only); NOM (12V only); NOM (5V only); ETL 62368; S-Mark 60950; CB 60950; ETL 60950; Class I; RCM; CCC; CB 60601-1; S-Mark IEC/EN 60601-1; EAC; ETL; CE; China RoHS; Level VI; LPS 60950; RoHS; Ukraine; VCC

Model No. GTM96600-6030-R3A

Part No./Ordering No. RR9LR2000T00CIMR6B | Rev C2

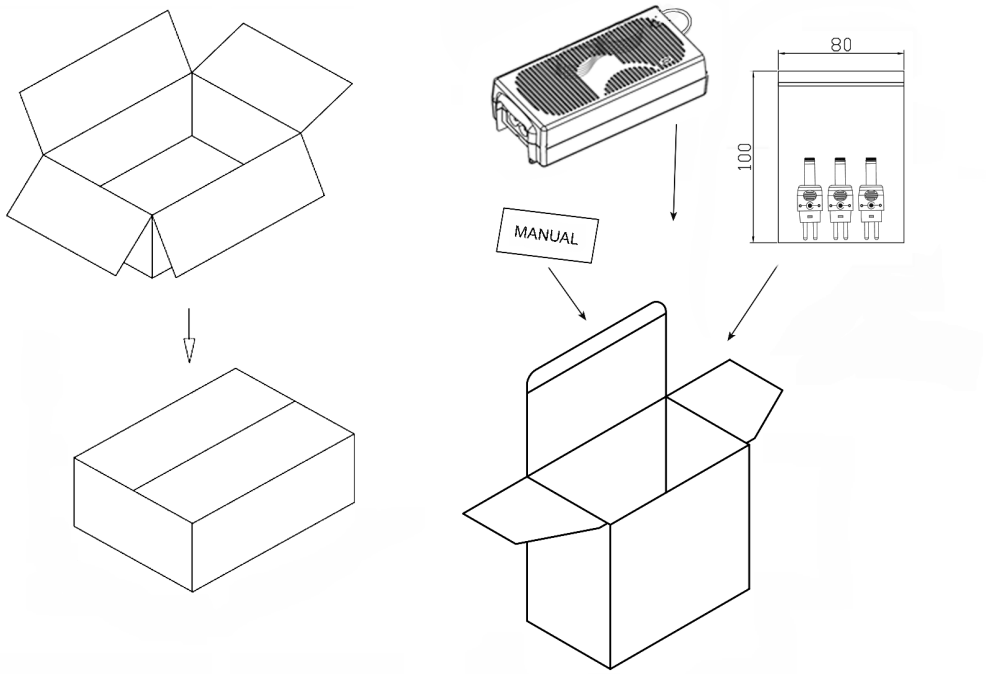

Manual for T00-plug:

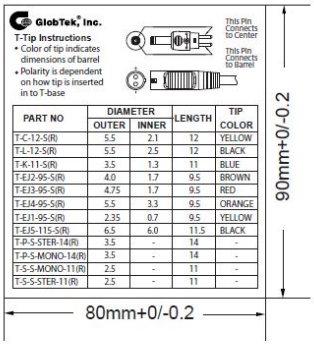

PART NO	DIAMETER OUTER	DIAMETER INNER	LENGTH	TIP COLOR
T-C-12-S(R)	5.5	2.1	12	YELLOW
T-L-12-S(R)	5.5	2.5	12	BLACK
T-K-11-S(R)	3.5	1.3	11	BLUE
T-EJ2-9S-S(R)	4.0	1.7	9.5	BROWN
T-EJ3-9S-S(R)	4.75	1.7	9.5	RED
T-EJ4-9S-S(R)	5.5	3.3	9.5	ORANGE
T-EJ1-9S-S(R)	2.35	0.7	9.5	YELLOW
T-EJ5-11S-S(R)	6.5	6.0	11.5	BLACK
T-P-S-STER-14(R)	3.5	-	14	-
T-P-S-MONO-14(R)	3.5	-	14	-
T-S-S-MONO-11(R)	2.5	-	11	-
T-S-S-STER-11(R)	2.5	-	11	-

正面/SHEET A

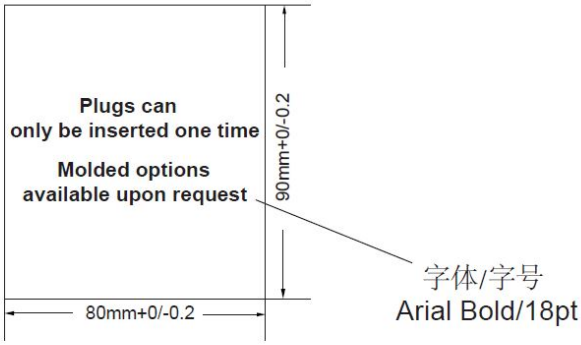

反面/SHEET B

PROPRIETARY INFORMATION
PROPRIETARY OF GLOBTEK, INC. ANY REPRODUCTION, DISCLOSURE OR USE OF THIS DRAWING, IN WHOLE OR IN PART, IS HEREBY PROHIBITED EXCEPT AS SPECIFIED IN WRITING BY GLOBTEK, INC. © GlobTek, Inc. 2016 - 2022
guest /09/02/2022 10:39:58 AM CLONED FROM GS-1046(R)

INSTRUCTIONS TO THE OEM SYSTEMS ENGINEER

It is the responsibility of the OEM systems engineer to provide the end system user instructions and warnings for the use of this product in the end system.

If an input cord is required for this product, AC Mains voltage should be provided to the power supply by a power supply cord approved to the national standards of the country in which it will be used.

This product is not designed to be repaired. No serviceable parts inside. A blown internal fuse is an indication of catastrophic failure of circuit component(s). If a Failure Analysis is required for a failed power supply/battery charger, please return the damaged unit to GlobTek for an accurate determination of the root cause of the failure.

EMC Compliance of the complete OEM product, including the GlobTek power supply/battery charger needs to be verified by the OEM systems engineer.

INSTRUCTION SHEET

N/A

PROPRIETARY INFORMATION

PROPRIETARY OF GLOBTEK, INC. ANY REPRODUCTION, DISCLOSURE OR USE OF THIS DRAWING, IN WHOLE OR IN PART, IS HEREBY PROHIBITED EXCEPT AS SPECIFIED IN WRITING BY GLOBTEK, INC. © GlobTek, Inc. 2016 - 2022

guest /09/02/2022 10:39:58 AM CLONED FROM GS-1046(R)