NHD-1.45-160128G

Graphic Color OLED Display

NHD-	Newhaven Display
1.45-	1.45” Diagonal Size
160128-	160 x 128 Pixels
G-	OLED Glass

Newhaven Display International, Inc.

2661 Galvin Ct.

Elgin IL, 60124

Ph: 847-844-8795 Fax: 847-844-8796

www.newhavendisplay.com

nhtech@newhavendisplay.com nhsales@newhavendisplay.com

Document Revision History

Revision	Date	Description	Changed by
-	01/25/19	Initial Release	PB

Functions and Features

- **160 x 128 pixel resolution**
- **Built-in SEPS525 controller**
- **Parallel, Serial, RGB interface**
- **RoHS compliant**

SYMBOL	REVISION	DATE

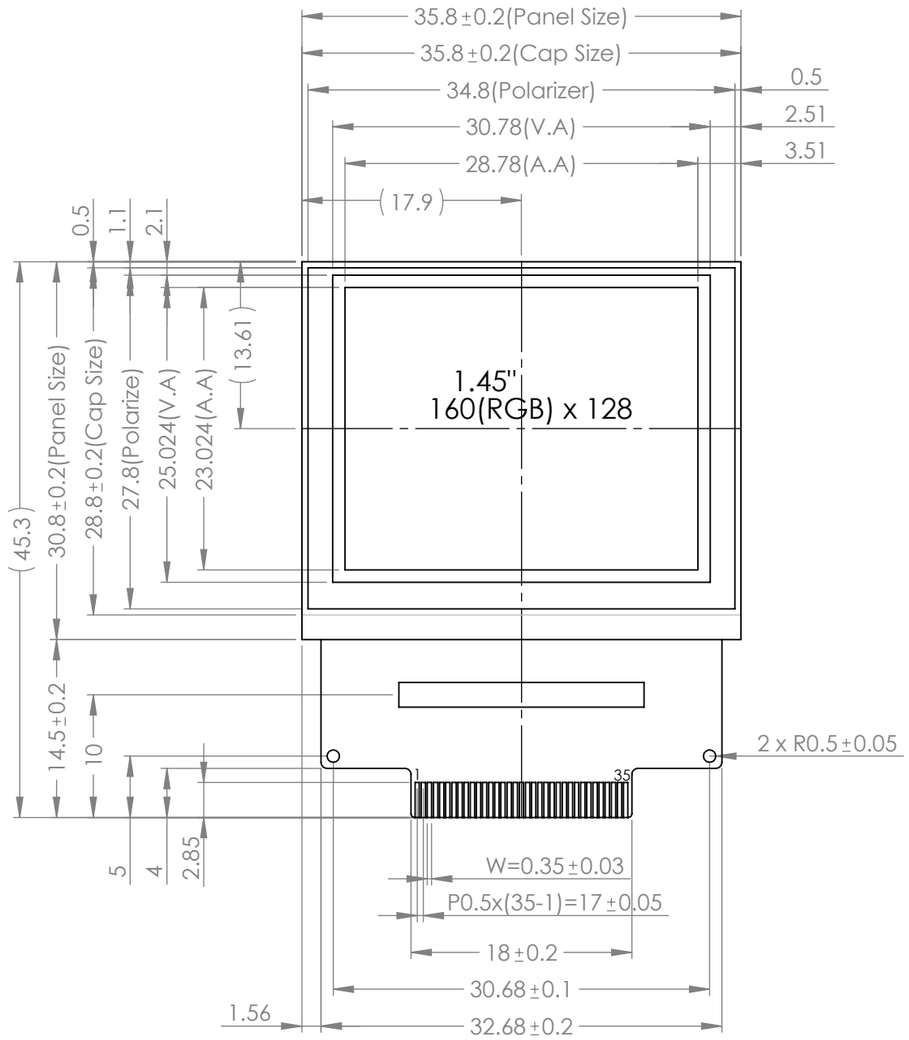

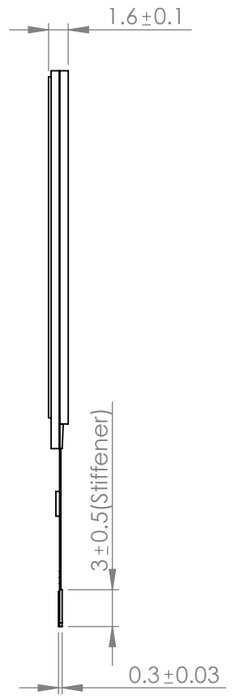

Pin	Symbol
1	N.C. (GND)
2	VSDH
3	VDDH
4	VSSH
5	IREF
6	OSCA2
7	OSCA1
8	VDDIO
9	VSYNCO
10	VSYNC
11	HSYNC
12	DOTCLK
13	ENABLE
14	CPU
15	PS
16	D17
17	D16
18	D15
19	D14
20	D13
21	D12
22	D11
23	D10
24	D9
25	RS
26	CSB
27	RDB
28	WRB
29	RESETB
30	VSS
31	VDD
32	VSSH
33	VDDH
34	VSDH
35	N.C. (GND)

Notes:

1. Display Type: 1.45” Color OLED Glass, FFC Connection
2. Driver IC: SEPS525
3. Supply Voltage:
   - Logic (V_{DD}) = 3.3V
   - Display (V_{CC}) = 13V
4. Interface: 8/9-Bit 68XX/80XX Parallel, 4-wire SPI, 6-Bit RGB
5. Operating Temp: -40°C - +70°C
6. Storage Temp: -40°C - +85°C

STANDARD TOLERANCES
(UNLESS OTHERWISE SPECIFIED)

LINEAR:
XX. ±0.3 mm

UNLESS OTHERWISE SPECIFIED
- DIMENSIONS ARE IN MILLIMETERS
- THIRD ANGLE PROJECTION

NEWHAVEN DISPLAY INTERNATIONAL

DRAWING/PART NUMBER:			REVISION:
NHD-1.45-160128G			1.0
DRAWN BY: N. Patel	CHECKED BY: M. LaVine	APPROVED BY: M. LaVine	SIZE: A3
DRAWN DATE: 09/13/18	CHECKED DATE: 01/15/19	APPROVED DATE: 01/15/19	SCALE: 2:1
DO NOT SCALE DRAWING		SHEET 1 OF 1	

THIS DRAWING IS SOLELY THE PROPERTY OF NEWHAVEN DISPLAY INTERNATIONAL, INC. THE INFORMATION IT CONTAINS IS NOT TO BE DISCLOSED, REPRODUCED OR COPIED IN WHOLE OR PART WITHOUT WRITTEN APPROVAL FROM NE WHAVEN DISPLAY.

Interface Description

Pin No.	Symbol	External Connection	Function Description
1	GND	Power Supply	Ground
2	V_{SDH}	Power Supply	Ground
3	V_{DDH}	Power Supply	Supply Voltage for OLED glass
4	V_{SSH}	Power Supply	Ground
5	I_{REF}	Power Supply	OLED brightness current. Connect a 68kΩ resistor between this pin and VSS
6-7	OSCA1-OSCA2	-	Oscillation adjustment. Connect a 5.1kΩ resistor between these two pins
8	V_{DDIO}	Power Supply	Supply Voltage for Logic
9	NC	-	No Connect
10	V_{SYNC}	MPU	Vertical Sync signal
11	H_{SYNC}	MPU	Horizontal Sync signal
12	DOTCLK	MPU	Dot Clock signal
13	ENABLE	MPU	Data Enable signal
14	CPU	MPU	Interface select. HIGH: 6800 interface. LOW: 8080 interface
15	PS	MPU	Parallel/Serial select. HIGH: Parallel. LOW: Serial
16-24	D17-D9	MPU	**Parallel interface:** 9-bit Bi-directional data bus (D17~D9) 8-bit Bi-directional data bus (D17~D10) **Serial Interface:** D17: Synchronous Clock signal (SCL) D16: Serial Data Input signal (SDI) D15: Serial Data Output signal (SDO) **RGB interface:** 6-bit RGB color signals (D17~D12)
25	RS	MPU	Register Select signal. LOW: Command. HIGH: Data
26	CSB	MPU	Active LOW Chip Select signal
27	E RDB	MPU	**6800 mode**: Enable signal. Falling edge triggered **8080 mode**: Active LOW Read signal
28	R/W WRB	MPU	**6800 mode**: Read/Write signal. LOW: Read. HIGH: Write **8080 mode**: Active LOW Write signal
29	RESETB	MPU	Active LOW Reset signal
30	V_{SS}	Power Supply	Ground
31	V_{DD}	Power Supply	Supply Voltage for Logic
32	V_{SSH}	Power Supply	Ground
33	V_{DDH}	Power Supply	Supply Voltage for OLED glass
34	V_{SDH}	Power Supply	Ground
35	GND	Power Supply	Ground

Recommended display connector: 35pin 0.5mm pitch top contact FFC connector (Molex 54104-3531 or equivalent)

MPU Interface Pin Assignment Summary

EIM=1 (Default)

Bus Interface	PS	CPU	DFM1	DFM0	D17	D16	D15	D14	D13	D12	D11	D10	D9	RS	CSB	RDB	WRB	RESETB
4-wire SPI	0	X	X	X	SCL	SDI	NC	0	0	0	0	0	0	RS	CSB	0	0	RESETB
9-bit 8080	1	0	1	0	D8	D7	D6	D5	D4	D3	D2	D1	D0	RS	CSB	RDB	WRB	RESETB
8-bit 8080	1	0	1	1	D7	D6	D5	D4	D3	D2	D1	D0	0	RS	CSB	RDB	WRB	RESETB
9-bit 6800	1	1	1	0	D8	D7	D6	D5	D4	D3	D2	D1	D0	RS	CSB	E	R/W	RESETB
8-bit 6800	1	1	1	1	D7	D6	D5	D4	D3	D2	D1	D0	0	RS	CSB	E	R/W	RESETB

EIM=0

Bus Interface	RIM1	RIM0	D17	D16	D15	D14	D13	D12	D11	D10	D9	VSYNC	HSYNC	DOTCLK	ENABLE
6-bit RGB	1	0	D5	D4	D3	D2	D1	D0	0	0	0	VSYNC	HSYNC	DOTCLK	ENABLE

Note:

1. DFM1, DFM0 register setting 16h
2. EIM, RIM1, RIM0 register setting 14h
3. ”X” : Don’t care
   “NC” : No Connect
   “1” : VDD
   “0” : VSS

Wiring Diagram

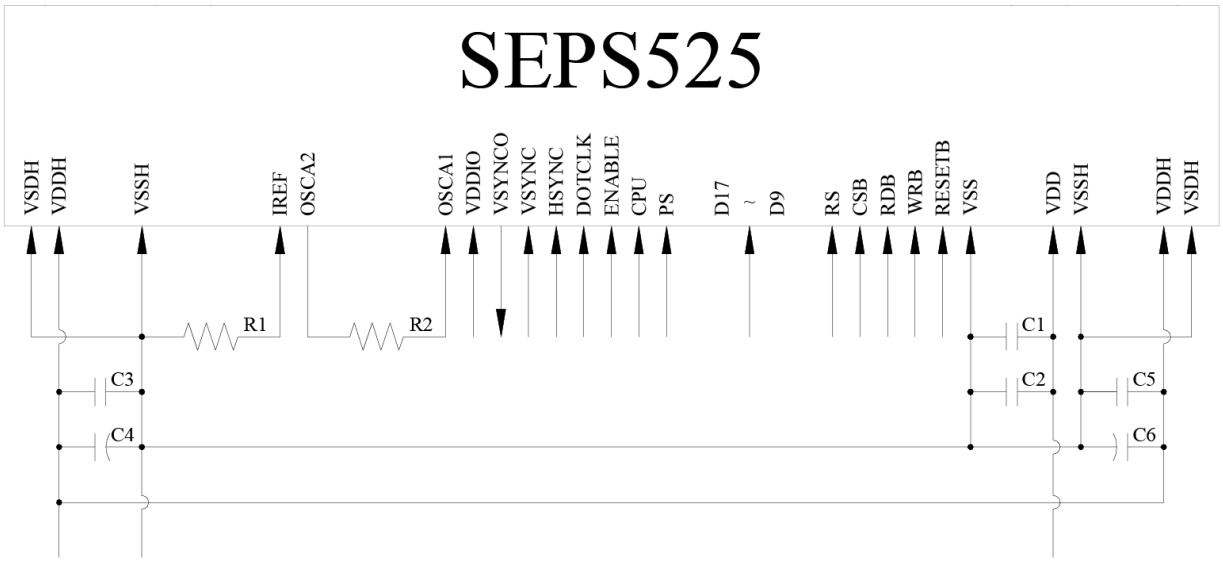

C1, C3, C5: 0.1μF
C2: 4.7μF
C4, C6: 4.7μF / 25V Tantalum Capacitor
R1: 68kΩ
R2: 5.1kΩ

Electrical Characteristics

Item	Symbol	Condition	Min.	Typ.	Max.	Unit
Operating Temperature Range	T_{OP}	Absolute Max	-40	-	+70	°C
Storage Temperature Range	T_{ST}	Absolute Max	-40	-	+85	°C
Supply Voltage for Logic	V_{DD}	-	2.4	2.8	3.3	V
Supply Voltage for I/O pins	V_{DDIO}	-	1.6	2.8	3.3	V
Supply Voltage for Display	V_{DDH}	-	12.5	13.0	13.5	V
Supply Current (Logic)	I_{DD}	V_{DD}=2.8V	-	2.5	3.5	mA
Supply Current (Display)	I_{DDH}	V_{DDH}=13.0V, 50% ON	-	16	19	mA
		V_{DDH}=13.5V, 100% ON	-	27	32	mA
Sleep mode Current	$I_{DD, SLEEP}$	-	-	4	10	µA
"H" Level input	V_{IH}	-	0.8*V_{DDIO}	-	V_{DDIO}	V
"L" Level input	V_{IL}	-	V_{SS}	-	0.4	V
"H" Level output	V_{OH}	-	V_{DDIO}-0.4	-	V_{DDIO}	V
"L" Level output	V_{OL}	-	V_{SS}	-	0.4	V

Optical Characteristics

Item		Symbol	Condition	Min.	Typ.	Max.	Unit
Optimal Viewing Angles	Top	φY+	-	80	-	-	o
	Bottom	φY-		80	-	-	o
	Left	θX-		80	-	-	o
	Right	θX+		80	-	-	o
Contrast Ratio		CR	-	-	>10,000:1	-	-
Response Time	Rise	T_R	-	-	10	-	us
	Fall	T_F	-	-	10	-	us
Brightness		L_V	50% Checkerboard	75	100	-	cd/m²
Lifetime		-	100 cd/m², T_{OP}=25°C 50% Checkerboard	10,000	-	-	Hrs
			75 cd/m², T_{OP}=25°C 50% Checkerboard	15,000	-	-	Hrs

Note: Lifetime at typical temperature is based on accelerated high-temperature operation. Lifetime is tested at average 50% pixels on and is rated as Hours until **Half-Brightness**. The Display OFF command can be used to extend the lifetime of the display.
Luminance of active pixels will degrade faster than inactive pixels. Residual (burn-in) images may occur. To avoid this, every pixel should be illuminated uniformly.

Controller information

Built-in SEPS525 controller.
Please download specification at http://www.newhavendisplay.com/appnotes/datasheets/OLEDs/SEPS525.pdf

Table of Commands

ADDR	RW	IB7	IB6	IB5	IB4	IB3	IB2	IB1	IB0	Description	Default
00h	R	IDX7	IDX6	IDX5	IDX4	IDX3	IDX2	IDX1	IDX0	INDEX	00h
01h	R	HC	VC	HV	SWAP	RD	CD	DC1	DC0	STATUS_RD	C0h
02h	R/W	SELEXP	SELRES	-	-	-	-	SELCLK	OSCDSB	OSC_CTL	C0h
80h	R/W	-	-	-	-	-	-	-	IREF	IREF	00h
03h	R/W	FR3	FR2	FR1	FR0	DFR3	DFR2	DFR1	DFR0	CLOCK_DIV	30h
04h	R/W	-	-	-	-	-	RC	OSCPS	PS	REDUCE_CURRENT	00h
05h	R/W	-	-	-	-	-	-	-	SRN	SOFT_RST	00h
06h	R/W	PREM	-	-	-	-	-	-	DON	DISP_ON_OFF	00h
08h	R/W	-	-	-	-	PTR3	PTR2	PTR1	PTR0	PRECHARGE_TIME_R	00h
09h	R/W	-	-	-	-	PTG3	PTG2	PTG1	PTG0	PRECHARGE_TIME_G	00h
0Ah	R/W	-	-	–	0	PTB3	PTB2	PTB1	PTB0	PRECHARGE_TIME_B	00h
0Bh	R/W	PCR7	PCR6	PCR5	PCR4	PCR3	PCR2	PCR1	PCR0	PRECHARGE_CURRENT_R	00h
0Ch	R/W	PCG7	PCG6	PCG5	PCG4	PCG3	PCG2	PCG1	PCG0	PRECHARGE_CURRENT_G	00h
0Dh	R/W	PCB7	PCB6	PCB5	PCB4	PCB3	PCB2	PCB1	PCB0	PRECHARGE_CURRENT_B	00h
10h	R/W	DCR7	DCR6	DCR5	DCR4	DCR3	DCR2	DCR1	DCR0	DRIVING_CURRENT_R	00h
11h	R/W	DCG7	DCG6	DCG5	DCG4	DCG3	DCG2	DCG1	DCG0	DRIVING_CURRENT_G	00h
12h	R/W	DCB7	DCB6	DCB5	DCB4	DCB3	DCB2	DCB1	DCB0	DRIVING_CURRENT_B	00h
13h	R/W	SWAP	SM	RD	CD	-	SPT	DC1	DC0	DISPLAY_MODE_SET	00h
14h	R/W	-	-	RIM1	RIM0	-	-	-	EIM	RGB_IF	11h
15h	R/W	RES	RES	ENP	DOP	VSYOEN	RES	RES	RES	RGB_POL	00h
16h	R/W	-	DFM1	DFM0	TRI	-	HC	VC	HV	MEMORY_WRITE_MODE	06h
17h	R/W	MX1_7	MX1_6	MX1_5	MX1_4	MX1_3	MX1_2	MX1_1	MX1_0	MX1_ADDR	00h
18h	R/W	MX2_7	MX2_6	MX2_5	MX2_4	MX2_3	MX2_2	MX2_1	MX2_0	MX2_ADDR	9Fh
19h	R/W	MY1_7	MY1_6	MY1_5	MY1_4	MY1_3	MY1_2	MY1_1	MY1_0	MY1_ADDR	00h
1Ah	R/W	MY2_7	MY2_6	MY2_5	MY2_4	MY2_3	MY2_2	MY2_1	MY2_0	MY2_ADDR	7Fh
20h	R/W	MAC7	MAC6	MAC5	MAC4	MAC3	MAC2	MAC1	MAC0	MEMORY_ACCESS_POINTER X	00h
21h	R/W	MAR7	MAR6	MAR5	MAR4	MAR3	MAR2	MAR1	MAR0	MEMORY_ACCESS_POINTER Y	00h
22h		DDRAM[17:0]								DDRAM_DATA_ACCESS_PORT	
50h	R/W	IGAMMA7	IGAMMA6	IGAMMA5	IGAMMA4	IGAMMA3	IGAMMA2	IGAMMA1	IGAMMA0	GRAY_SCALE_TABLE_INDEX	00h
51h	R/W	DGAMMA7	DGAMMA6	DGAMMA5	DGAMMA4	DGAMMA3	DGAMMA2	DGAMMA1	DGAMMA0	GRAY_SCALE_TABLE_DATA	
28h	R/W	DUTY7	DUTY6	DUTY5	DUTY4	DUTY3	DUTY2	DUTY1	DUTY0	DUTY	7Fh
29h	R/W	DSL7	DSL6	DSL5	DSL4	DSL3	DSL2	DSL1	DSL0	DSL	00h
2Eh	R/W	FAC7	FAC6	FAC5	FAC4	FAC3	FAC2	FAC1	FAC0	D1_DDRAM_FAC	00h
2Fh	R/W	FAR7	FAR6	FAR5	FAR4	FAR3	FAR2	FAR1	FAR0	D1_DDRAM_FAR	00h
31h	R/W	SAC7	SAC6	SAC5	SAC4	SAC3	SAC2	SAC1	SAC0	D2_DDRAM_SAC	00h
32h	R/W	SAR7	SAR6	SAR5	SAR4	SAR3	SAR2	SAR1	SAR0	D2_DDRAM_SAR	00h
33h	R/W	FX1_7	FX1_6	FX1_5	FX1_4	FX1_3	FX1_2	FX1_1	FX1_0	SCR1_FX1	00h
34h	R/W	FX2_7	FX2_6	FX2_5	FX2_4	FX2_3	FX2_2	FX2_1	FX2_0	SCR1_FX2	9Fh
35h	R/W	FY1_7	FY1_6	FY1_5	FY1_4	FY1_3	FY1_2	FY1_1	FY1_0	SCR1_FY1	00h
36h	R/W	FY2_7	FY2_6	FY2_5	FY2_4	FY2_3	FY2_2	FY2_1	FY2_0	SCR1_FY2	7Fh
37h	R/W	SX1_7	SX1_6	SX1_5	SX1_4	SX1_3	SX1_2	SX1_1	SX1_0	SCR2_SX1	00h
38h	R/W	SX2_7	SX2_6	SX2_5	SX2_4	SX2_3	SX2_2	SX2_1	SX2_0	SCR2_SX2	9Fh
39h	R/W	SY1_7	SY1_6	SY1_5	SY1_4	SY1_3	SY1_2	SY1_1	SY1_0	SCR2_SY1	00h
3Ah	R/W	SY2_7	SY2_6	SY2_5	SY2_4	SY2_3	SY2_2	SY2_1	SY2_0	SCR2_SY2	7Fh
3Bh	R/W	-	SSA1	SSA0	-	SSC1	SSC0	-	SSM	SCREEN_SAVER_CONTEROL	00h
3Ch	R/W	SST7	SST6	SST5	SST4	SST3	SST2	SST1	SST0	SS_SLEEP_TIMER	00h
3Dh	R/W	-	-	SMS1	SMS0	-	-	SMF1	SMF0	SCREEN_SAVER_MODE	00h
3Eh	R/W	FSUT7	FSUT6	FSUT5	FSUT4	FSUT3	FSUT2	FSUT1	FSUT0	SS_SCR1_FU	00h
3Fh	R/W	-	-	-	-	FSMS3	FSMS2	FSMS1	FSMS0	SS_SCR1_MXY	00h
40h	R/W	SSUT7	SSUT6	SSUT5	SSUT4	SSUT3	SSUT2	SSUT1	SSUT0	SS_SCR2_FU	00h
41h	R/W	SSMS7	SSMS6	SSMS5	SSMS4	SSMS3	SSMS2	SSMS1	SSMS0	SS_SCR2_MXY	00h
42h	R/W	-	-	SSMD1	SSMD0	-	-	-	-	MOVING_DIRECTION	00h
47h	R/W	ISX1_7	ISX1_6	ISX1_5	ISX14	ISX1_3	ISX1_2	ISX1_1	ISX1_0	SS_SCR2_SX1	00h
48h	R/W	ISX2_7	ISX2_6	ISX2_5	ISX2_4	ISX2_3	ISX2_2	ISX2_1	ISX2_0	SS_SCR2_SX2	00h
49h	R/W	ISY1_7	ISY1_6	ISY1_5	ISY1_4	ISY1_3	ISY1_2	ISY1_1	ISY1_0	SS_SCR2_SY1	00h
4Ah	R/W	ISY2_7	ISY2_6	ISY2_5	ISY2_4	ISY2_3	ISY2_2	ISY2_1	ISY2_0	SS_SCR2_SY2	00h

Timing Characteristics

6800-Series MCU Parallel Interface:

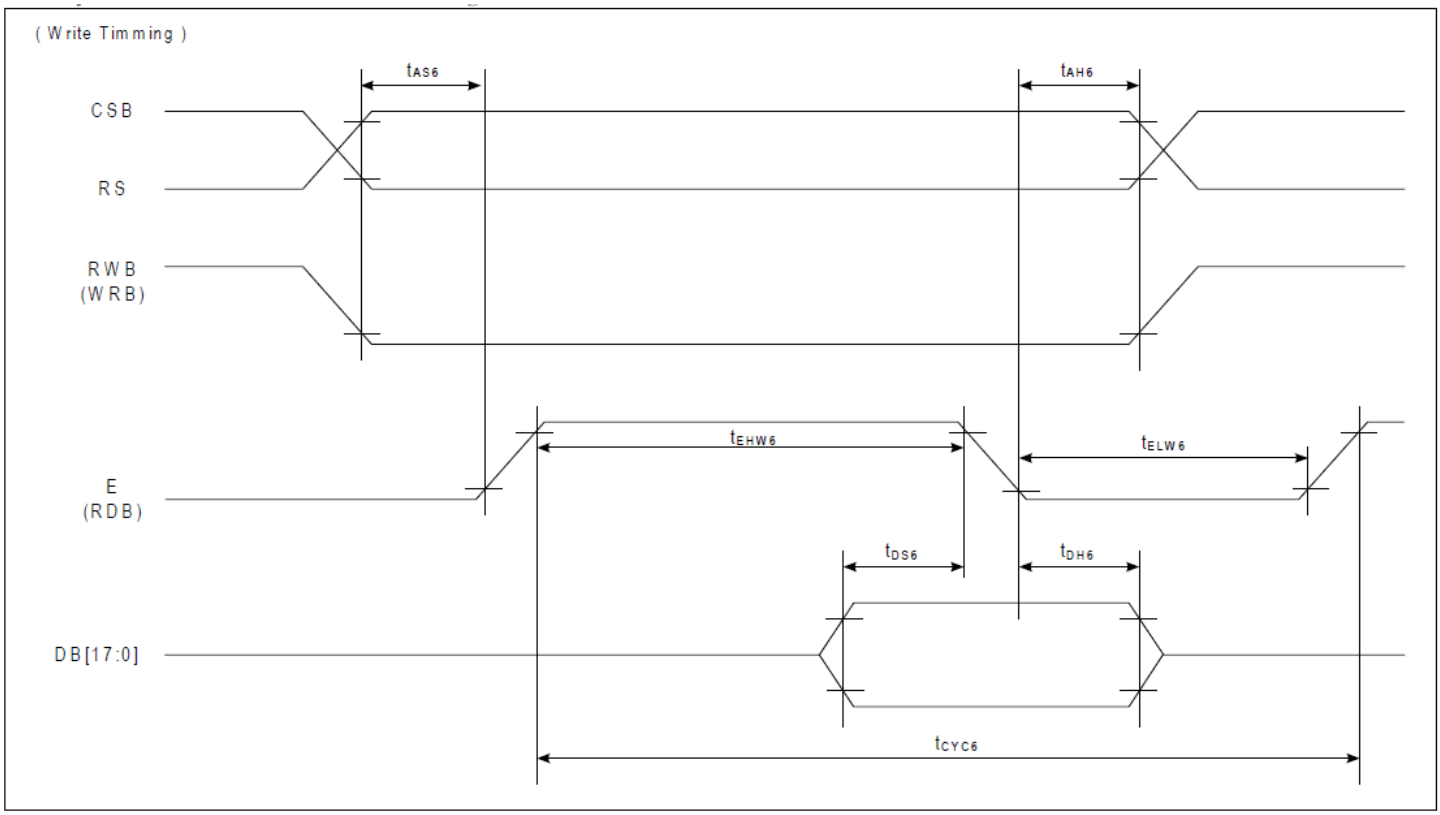

ITEM	SYMBOL	CONDITION	MIN	MAX	UNIT	PORT
Address hold timing	t_{AH6}	-	5	-	ns	CSB
Address setup timing	t_{AS6}		5		ns	RS
System cycle timing	t_{CYC6}	-	100	-	ns	E
Write "L" pulse width	t_{ELW6}		45		ns	
Write "H" pulse width	t_{EHW6}		45		ns	
Data setup timing	t_{DS6}	-	40	-	ns	DB[17:0]
Data hold timing	t_{DH6}		10		ns	

(Read Timming)

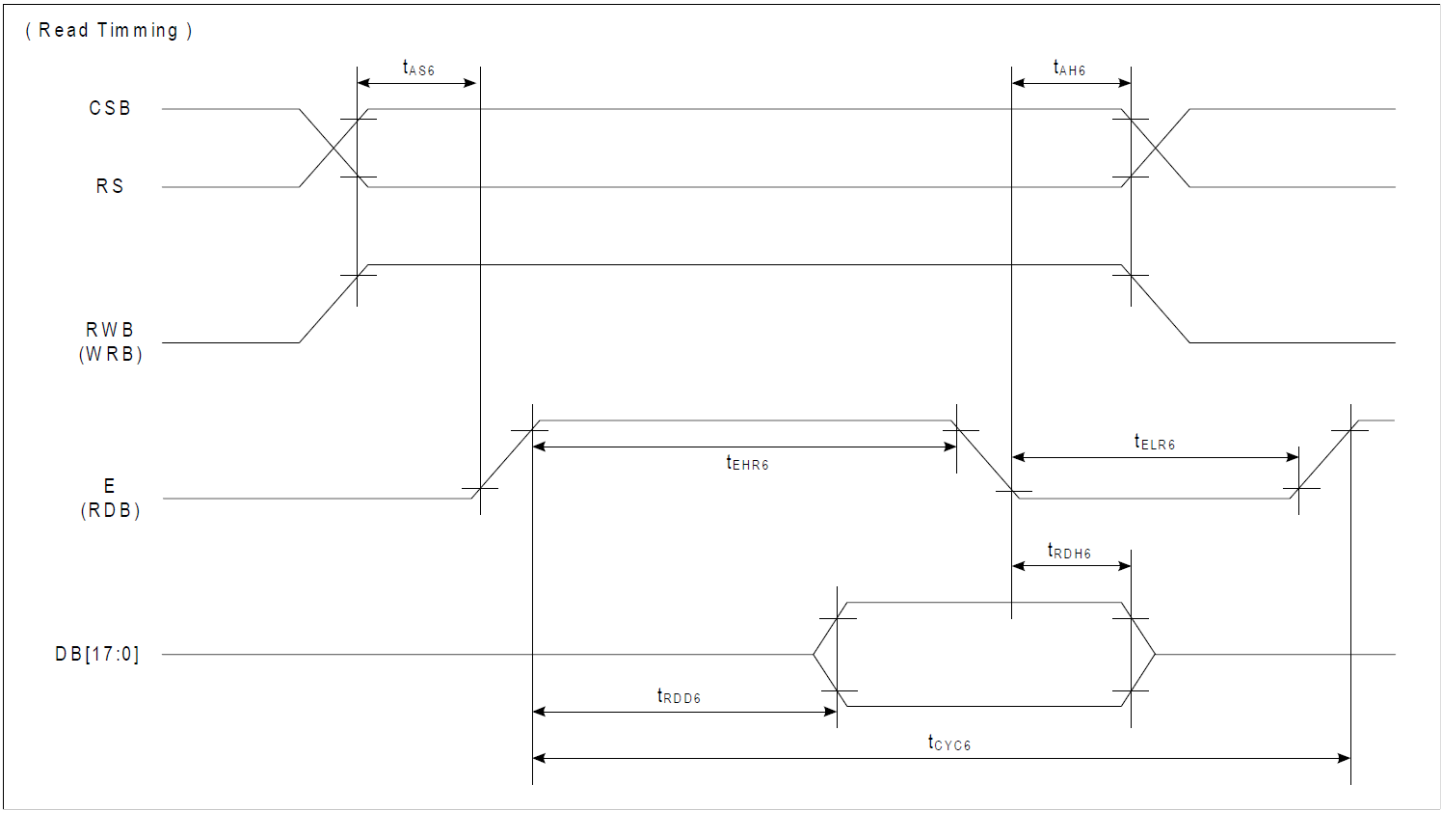

ITEM	SYMBOL	CONDITION	MIN	MAX	UNIT	PORT
Address hold timing	t_{AH6}	-	10	-	ns	CSB
Address setup timing	t_{AS6}		10		ns	RS
System cycle timing	t_{CYC6}	-	200	-	ns	E
Read "L" pulse width	t_{ELR6}		90		ns	
Read "H" pulse width	t_{EHR6}		90		ns	
Read data output delay time	t_{RDD6}	CL = 15 pF	0	70	ns	DB[17:0]
Data hold timing	t_{RDH6}				ns	

8080-Series MCU Parallel Interface:

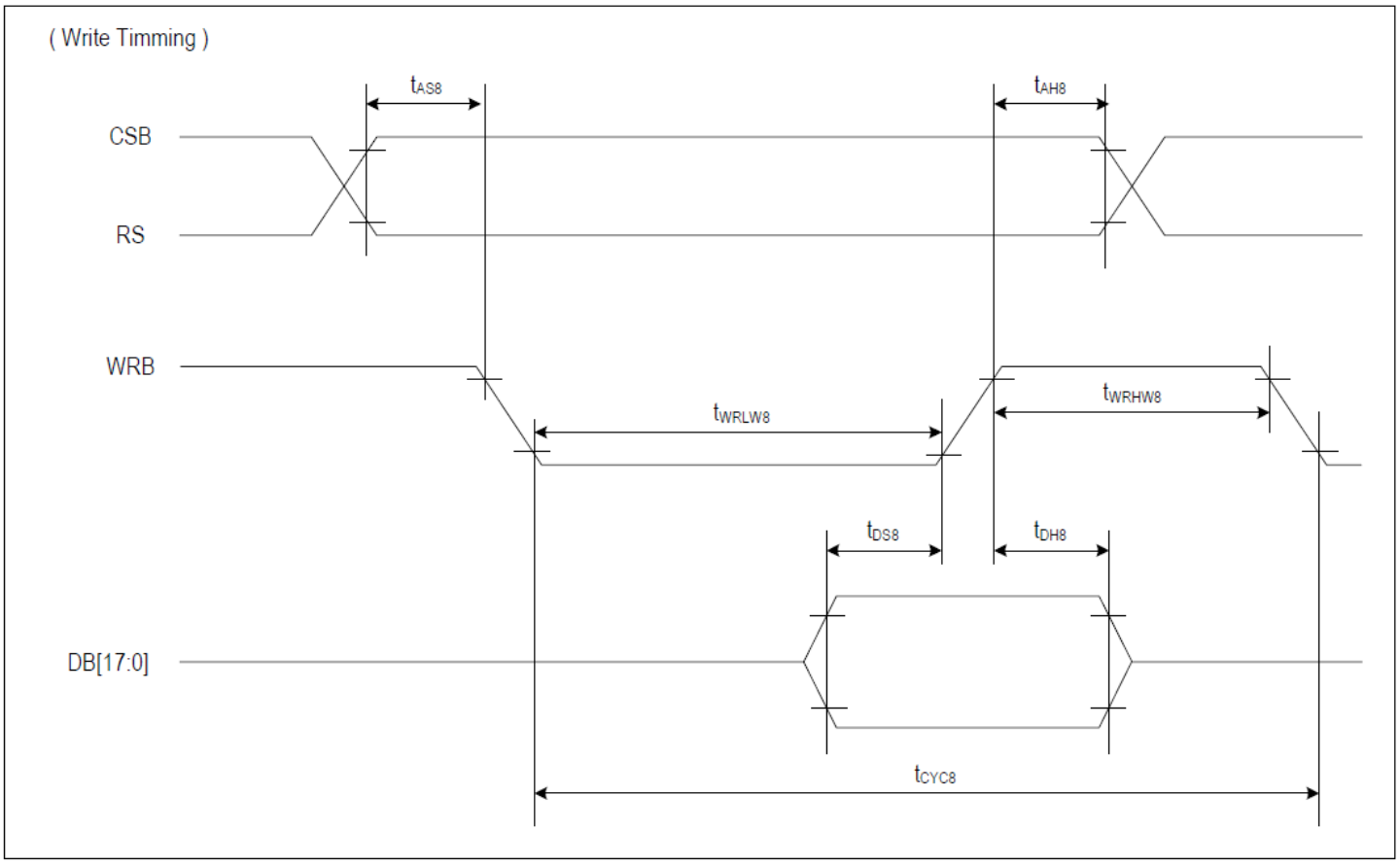

ITEM	SYMBOL	CONDITION	MIN	MAX	UNIT	PORT
Address hold timing	t_{AH8}	-	5	-	ns	CSB
Address setup timing	t_{AS8}		5		ns	RS
System cycle timing	t_{CYC8}	-	100	-	ns	WRB
Write "L" pulse width	t_{WRLW8}		45		ns	
Write "H" pulse width	t_{WRHW8}		45		ns	
Data setup timing	t_{DS8}	-	30	-	ns	DB[17:0]
Data hold timing	t_{DH8}		10		ns	

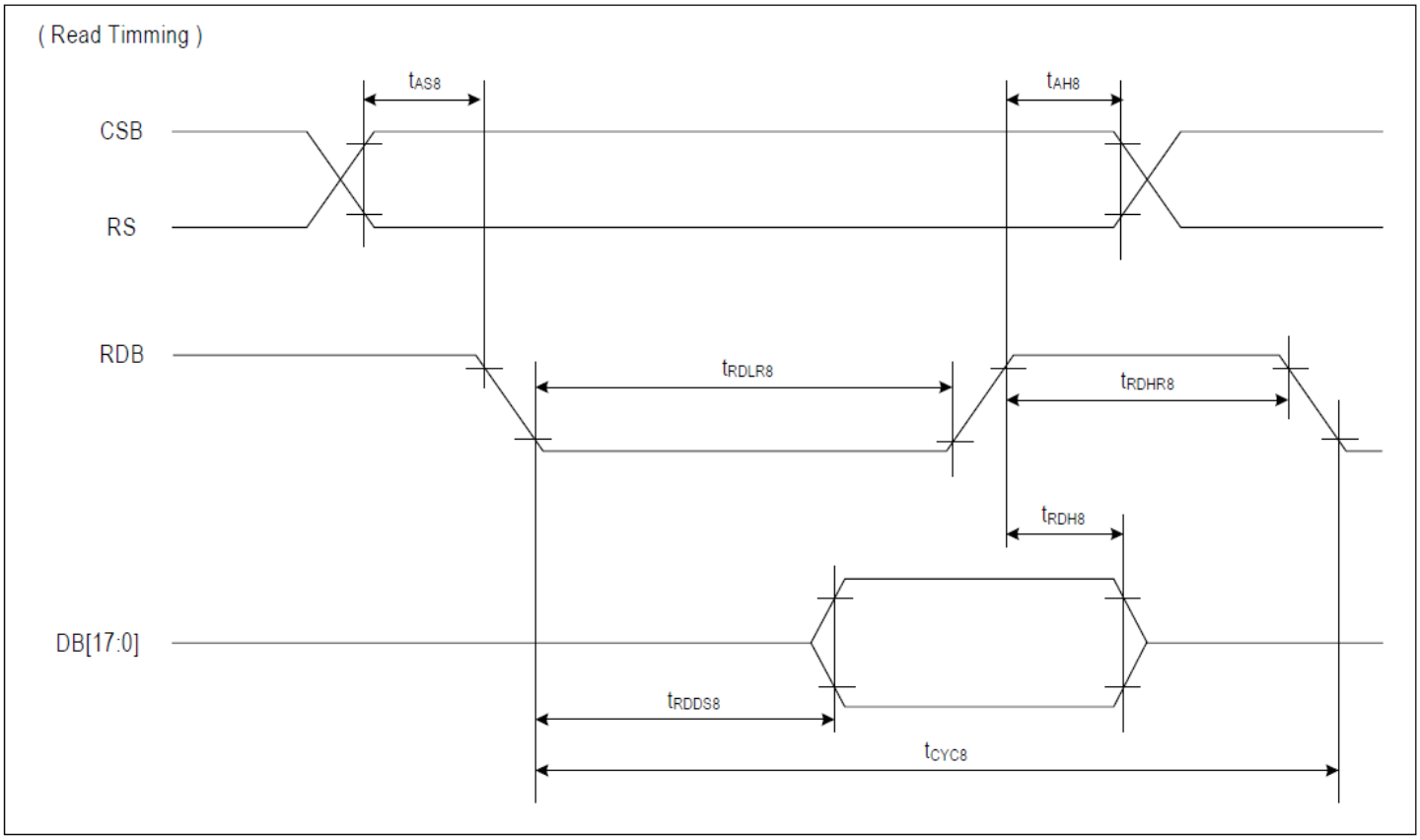

ITEM	SYMBOL	CONDITION	MIN	MAX	UNIT	PORT
Address hold timing	t_{AH8}	-	5	-	ns	CSB
Address setup timing	t_{AS8}		5		ns	RS
System cycle timing	t_{CYC8}	-	200	-	ns	RDB
Read "L" pulse width	t_{RDLR8}		90		ns	
Read "H" pulse width	t_{RDHR8}		90		ns	
Read data output delay time	t_{RDD8}	CL = 15 pF	-	60	ns	DB[17:0]
Data hold timing	t_{RDH8}		0		ns	

4-wire SPI:

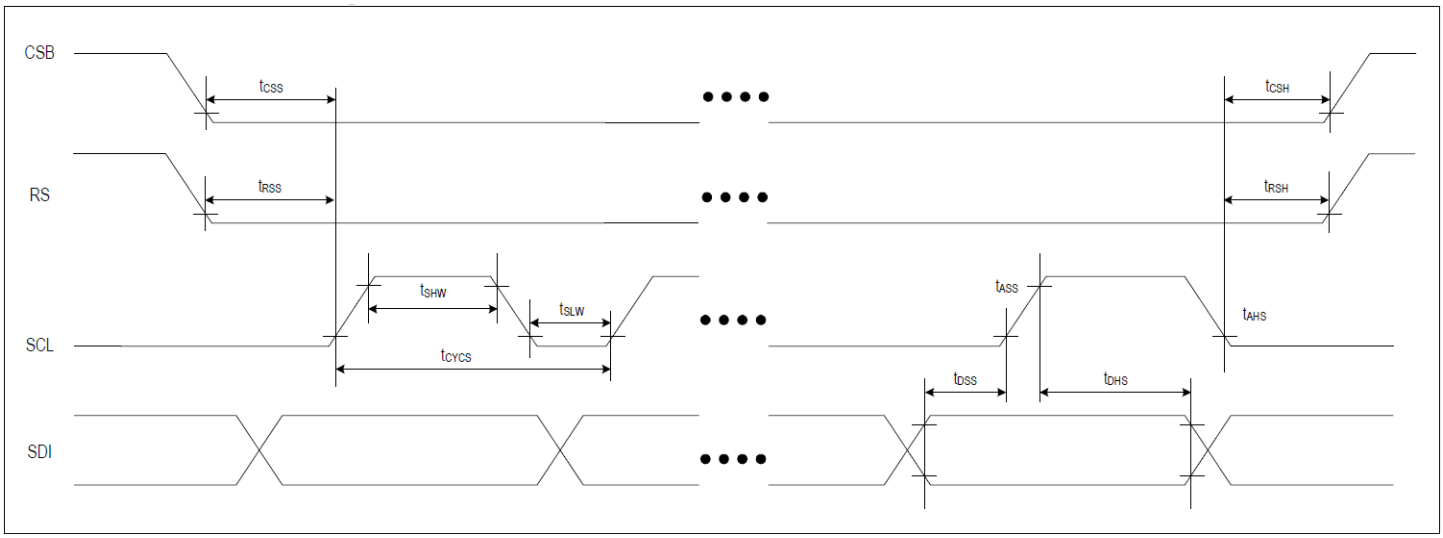

ITEM	SYMBOL	CONDITION	MIN	MAX	UNIT	PORT
Serial clock cycle	t_{CYCS}	-	100	-	ns	SCL
SCL "H" pulse width	t_{SHW}		45		ns	
SCL "L" pulse width	t_{SLW}		45		ns	
Data setup timing	t_{DSS}	-	5	-	ns	SDI
Data hold timing	t_{DHS}		5		ns	
CSB-SCL timing	t_{CSS}	-	5	-	ns	CSB
CSB-hold timing	t_{CSH}		5		ns	
RS-SCL timing	T_{RSS}	-	5	-	ns	RS
RS-hold timing	T_{RSH}		5		ns	

6-bit RGB:

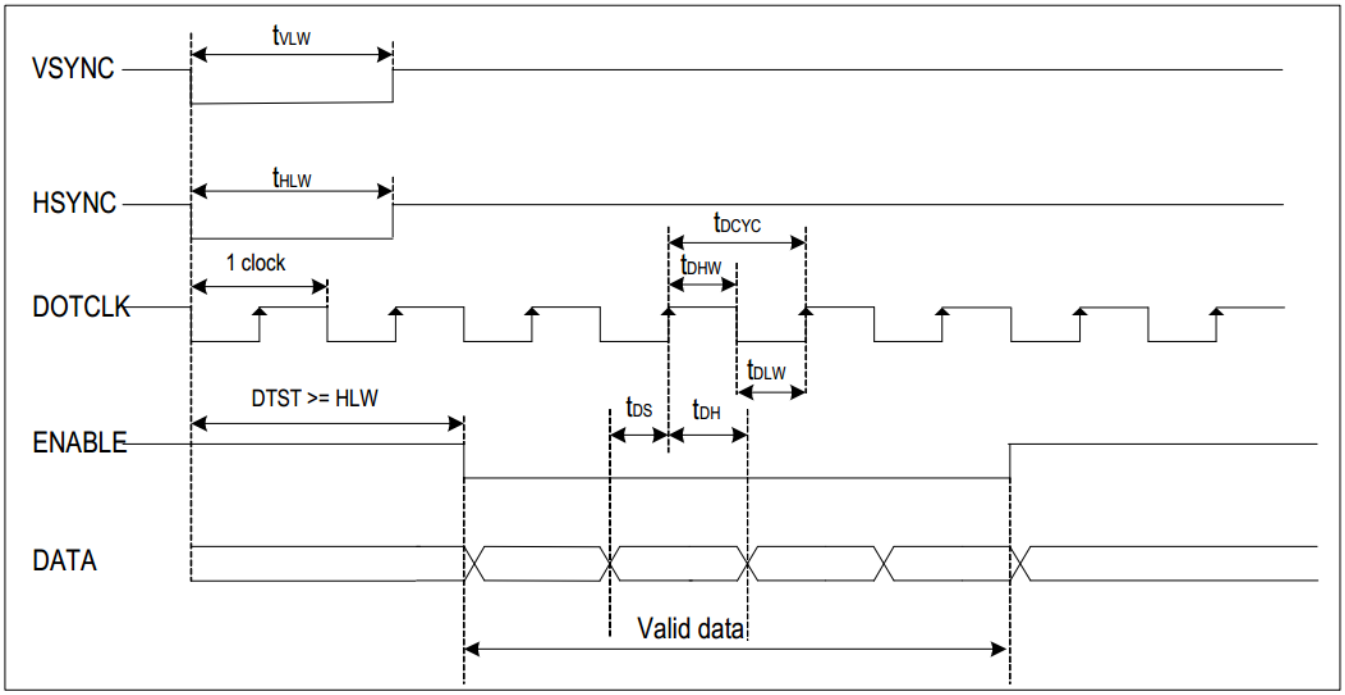

ITEM	SYMBOL	CONDITION	MIN	MAX	UNIT	PORT
Dot clock cycle	tDCYC	-	100	-	ns	DOTCLK
Dot "H" pulse width	tDHW		50		ns	
Dot "L" pulse width	tDLW		50		ns	
Data setup timing	tDS	-	5	-	ns	DATA
Data hold timing	tDH		5		ns	
Vsync pulse width	tVLW	-	1		DOTCLK	VSYNC
Hsync pulse width	tHLW		1		DOTCLK	HSYNC

Reset:

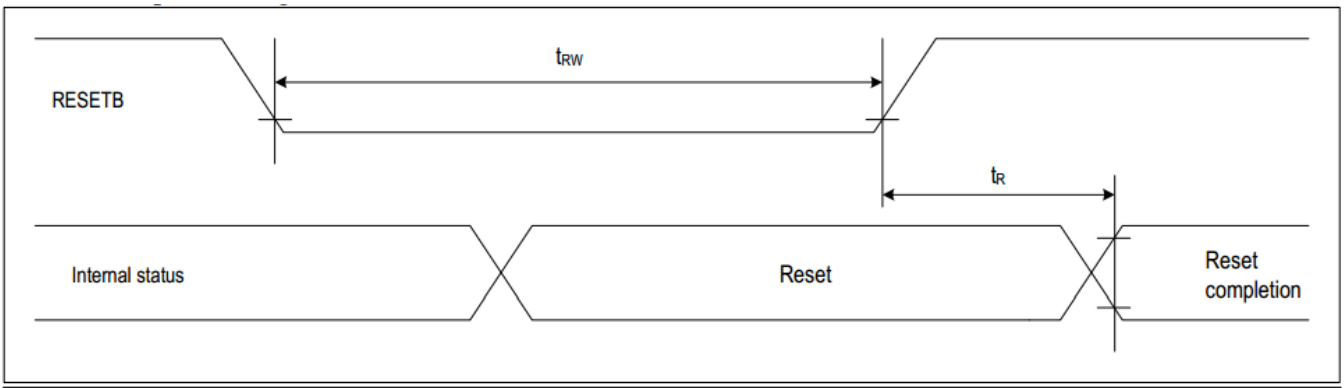

ITEM	SYMBOL	CONDITION	MIN	MAX	UNIT	PORT
Reset time	tR			1.5	us	
RESETB "L" pulse width	tRW		5		us	RESETB

Example Initialization Sequence:

```
void OLED_Init_160128RGB(void)
{
GPIO_ResetBits(RES_pin);
delay_ms(10);
GPIO_SetBits(RES_pin);
delay_ms(10);

oled_Command_160128RGB(0x04);          //Set REDUCE_CURRENT
oled_Data_160128RGB(0x01);

delay_ms(2);

oled_Command_160128RGB(0x04);          //Set REDUCE_CURRENT
oled_Data_160128RGB(0x00);

delay_ms(2);

oled_Command_160128RGB(0x05);          //Set SOFT_RST
oled_Data_160128RGB(0x00);

oled_Command_160128RGB(0x06);          //Set DISP_ON_OFF
oled_Data_160128RGB(0x00);

oled_Command_160128RGB(0x02);          //Set OSC_CTL
oled_Data_160128RGB(0x01);

oled_Command_160128RGB(0x03);          //Set CLOCK_DIV
oled_Data_160128RGB(0x30);

oled_Command_160128RGB(0x28);          //Set DUTY
oled_Data_160128RGB(0x7F);

oled_Command_160128RGB(0x29);          //Set DSL
oled_Data_160128RGB(0x00);

oled_Command_160128RGB(0x20);          //Set MEMORY_ACCESSPOINTER_X
oled_Data_160128RGB(0x00);

oled_Command_160128RGB(0x21);          //Set MEMORY_ACCESSPOINTER_Y
oled_Data_160128RGB(0x00);

oled_Command_160128RGB(0x14);          //Set RGB_IF
oled_Data_160128RGB(0x31);

oled_Command_160128RGB(0x15);          //Set RGB_POL
oled_Data_160128RGB(0x00);

oled_Command_160128RGB(0x13);          //Set DISPLAY_MODE_SET
oled_Data_160128RGB(0x00);

oled_Command_160128RGB(0x16);          //Set MEMORY_WRITE_MODE
oled_Data_160128RGB(0x76);
```

```
oled_Command_160128RGB(0x10);          //Set DRIVING_CURRENT_R
oled_Data_160128RGB(0x32);

oled_Command_160128RGB(0x11);          //Set DRIVING_CURRENT_G
oled_Data_160128RGB(0x27);

oled_Command_160128RGB(0x12);          //Set DRIVING_CURRENT_B
oled_Data_160128RGB(0x2B);

oled_Command_160128RGB(0x08);          //Set PRECHARGE_TIME_R
oled_Data_160128RGB(0x01);

oled_Command_160128RGB(0x09);          //Set PRECHARGE_TIME_G
oled_Data_160128RGB(0x01);

oled_Command_160128RGB(0x0A);          //Set PRECHARGE_TIME_B
oled_Data_160128RGB(0x02);

oled_Command_160128RGB(0x0B);          //Set PRECHARGE_CURRENT_R
oled_Data_160128RGB(0x0C);

oled_Command_160128RGB(0x0C);          //Set PRECHARGE_CURRENT_R
oled_Data_160128RGB(0x19);

oled_Command_160128RGB(0x0D);          //Set PRECHARGE_CURRENT_R
oled_Data_160128RGB(0x15);

oled_Command_160128RGB(0x80);          //Set IREF
oled_Data_160128RGB(0x00);

oled_Clear_Screen();                   //Clear Display (write all 0x00's to display RAM)

oled_Command_160128RGB(0x17);          //Set MX1_ADDR
oled_Data_160128RGB(0x00);

oled_Command_160128RGB(0x18);          //Set MX2_ADDR
oled_Data_160128RGB(0x9F);

oled_Command_160128RGB(0x19);          //Set MY1_ADDR
oled_Data_160128RGB(0x00);

oled_Command_160128RGB(0x1A);          //Set MY2_ADDR
oled_Data_160128RGB(0x7F);

oled_Command_160128RGB(0x06);          //Set DISP_ON_OFF
oled_Data_160128RGB(0x01);

delay_ms(100);

oled_Command_160128RGB(0x22);           //Enable write to display RAM
}
```

Quality Information

Test Item	Content of Test	Test Condition	Note
High Temperature storage	Test the endurance of the display at high storage temperature.	+85°C, 96hrs	2
Low Temperature storage	Test the endurance of the display at low storage temperature.	-40°C, 96hrs	1,2
High Temperature Operation	Test the endurance of the display by applying electric stress (voltage & current) at high temperature.	+70°C, 96hrs	2
Low Temperature Operation	Test the endurance of the display by applying electric stress (voltage & current) at low temperature.	-40°C, 96hrs	1,2
High Temperature / Humidity Operation	Test the endurance of the display by applying electric stress (voltage & current) at high temperature with high humidity.	+60°C, 90% RH, 96hrs	1,2
Thermal Shock resistance	Test the endurance of the display by applying electric stress (voltage & current) during a cycle of low and high temperatures.	-30°C,30min -> 25°C,5min -> 70°C,30min = 1 cycle 100 cycles	
Vibration test	Test the endurance of the display by applying vibration to simulate transportation and use.	10-22Hz , 15mm amplitude. 22-500Hz, 1.5G 30min in each of 3 directions X,Y,Z	3
Atmospheric Pressure test	Test the endurance of the display by applying atmospheric pressure to simulate transportation by air.	115mbar, 40hrs	3
Static electricity test	Test the endurance of the display by applying electric static discharge.	VS=800V, RS=1.5kΩ, CS=100pF One time	

Note 1: No condensation to be observed.
Note 2: Conducted after 2 hours of storage at 25°C, 0%RH.
Note 3: Test performed on product itself, not inside a container.
Evaluation Criteria:
1: Display is fully functional during operational tests and after all tests, at room temperature.
2: No observable defects.
3: Luminance >50% of initial value.
4: Current consumption within 50% of initial value

Precautions for using OLEDs/LCDs/LCMs

See Precautions at www.newhavendisplay.com/specs/precautions.pdf

Warranty Information

See Terms & Conditions at http://www.newhavendisplay.com/index.php?main_page=terms