FACE VIEW - MALE INSERT
5 POLE
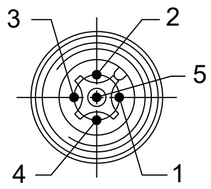
1 BROWN 2 WHITE 3 BLUE 4 BLACK 5 GRAY

PART NUMBER LEGEND

805006K03M010

FINISHED LENGTH
M005 = 0.5 METER
M010 = 1 METER
M100 = 10 METER

PART NO	ENGINEERING NO.	FINISHED LENGTH
1200659221	805006K03M010	1M [3FT 3 IN]
1200652423	805006K03M150	15M [49FT 2 IN]
1200659223	805006K03M300	30M [98FT 5 IN]

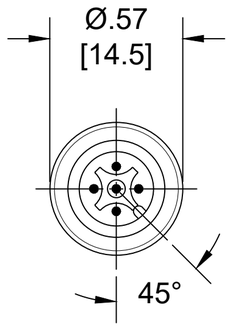

MALE FACE VIEW

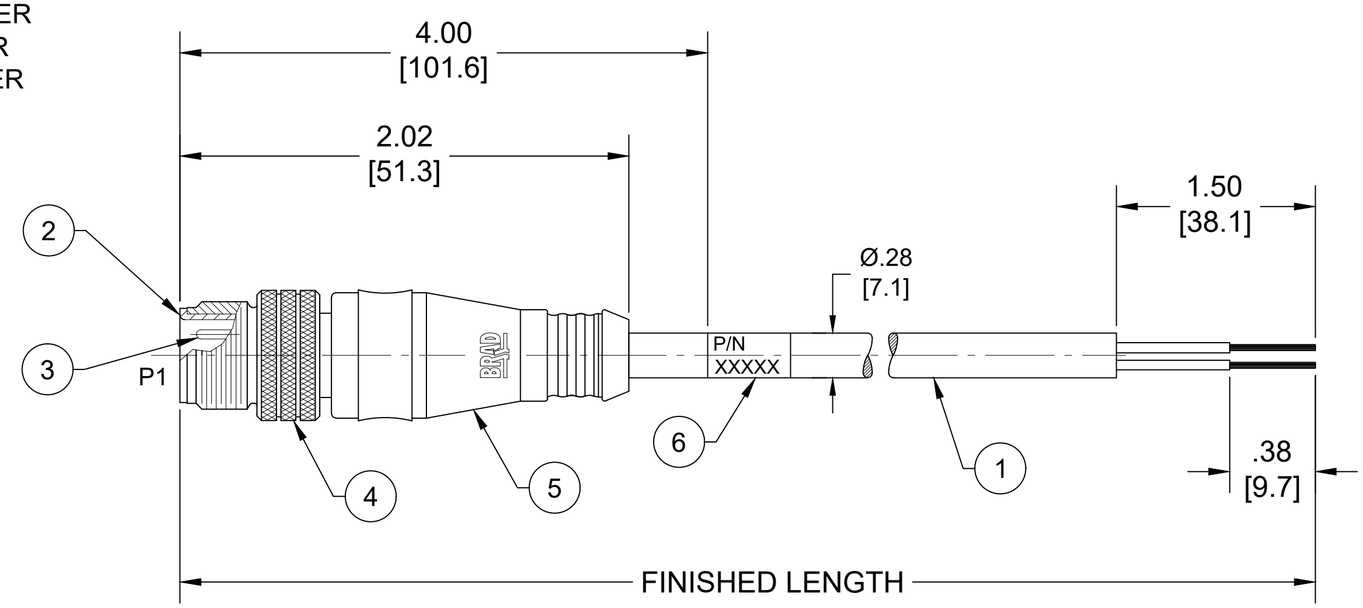

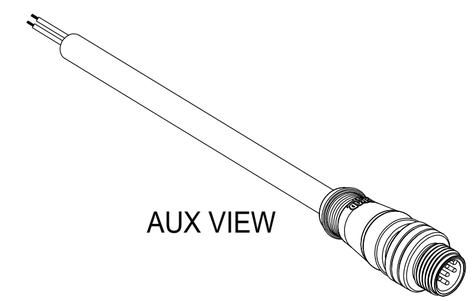

AUX VIEW

NOTES:
1. MATERIAL: AS NOTED
2. FINISH: AS NOTED
3. ELECTRICAL:
   VOLTAGE: 250V
   CURRENT: 4A
4. TEMP RATING: -20°TO +105°C
5. PROTECTION: IP67 (WHEN MATED)
6. COUPLING THREAD: M12X1
7. UL RECOGNIZED FILE: E152210
   CSA CERTIFIED FILE: LR6837
8. ALL DIMENSIONS ARE FOR REFERENCE
   UNLESS TOLERANCED OR NOTED OTHERWISE

P1

1	BROWN
2	WHITE
3	BLUE
4	BLACK
5	GRAY

WIRING DIAGRAM

CABLE LENGTH TOLERANCES
<.3M [1FT]: +19mm-0 [+.75in-0]
.3 - .9M [1 - 3FT]: +44.5mm-0 [+1.75in-0]
.9 - 1.8M [3 - 6FT]: +55.6mm-0 [+2.19in-0]
1.8 - 3.7M [6 - 12FT: +88.9mm-0 [+3.50in-0]
3.7 - 7.3M [12 - 24FT]: +165.1mm-0 [+6.50in-0]
7.3-14.6M [24 - 48FT]: +317.5mm-0 [+12.50in-0]
14.6 - 30.5M [48-100FT]: +622.3mm-0 [+24.50in-0]
OVER 30M [100FT] +2% OF FINISHED LENGTH

ITEM	DESCRIPTION	MATERIAL	FINISH
6	WRAP LABEL	VINYL	BLACK/YELLOW
5	OVERMOLD	TPC	YELLOW
4	COUPLING NUT	BRASS	TEFLON/NICKEL
3	CONTACT PIN	COPPER ALLOY	GOLD OVER NICKEL
2	MALE INSERT	PUR	BLACK
1	CABLE #18AWG (C)	TPE JACKET	YELLOW

DOCUMENT STATUS	P1	RELEASE DATE	2022/08/05 23:42:29

THIS DRAWING CONTAINS INFORMATION THAT IS PROPRIETARY TO MOLEX ELECTRONIC TECHNOLOGIES, LLC AND SHOULD NOT BE USED WITHOUT WRITTEN PERMISSION

FUNCTIONAL SYMBOLS: FA=0, FC=0, FP=0
DIVISIONAL SYMBOLS

DIMENSION UNITS: INCH/MM
SCALE: NTS

GENERAL TOLERANCES (UNLESS SPECIFIED)

	mm	INCH
4 PLACES	±----	±----
3 PLACES	±----	±----
2 PLACES	±----	±----
1 PLACE	±----	±----
0 PLACES	±----	±----
ANGULAR TOL ±	---- °	

DRAFT WHERE APPLICABLE MUST REMAIN WITHIN DIMENSIONS

CURRENT REV DESC: CABLE CHANGED TO 18AWG. REVISED FLEX DATA

EC NO: 715560
DRWN: RSTONE 2022/07/26
CHK'D: MZIELINSKI 2022/07/27
APPR: BWOODMAN 2022/08/05

INITIAL REVISION:
DRWN: BWOODMAN 2009/08/17
APPR: JFMURPHY 2009/08/21

molex

MICRO-CHANGE CORDSET, M12,
5 POLE, MALE, STRAIGHT, SINGLE KEY,
#18 AWG TPE HI-FLEX

PRODUCT CUSTOMER DRAWING

DOCUMENT NUMBER	DOC TYPE	DOC PART	REVISION
SD-120065-021	PSD	001	C

THIRD ANGLE PROJECTION	DRAWING	SERIES	MATERIAL NUMBER	CUSTOMER	SHEET NUMBER
	C-SIZE	120065	SEE CHART	GENERAL MARKET	1 OF 1

FORMAT: IN-ACAD-tb-prod-C
REVISION: B
DATE: 2020/01/14