MALE PLUG U12 ANGLED 90° TO MALE PLUG U12 STRAIGHT

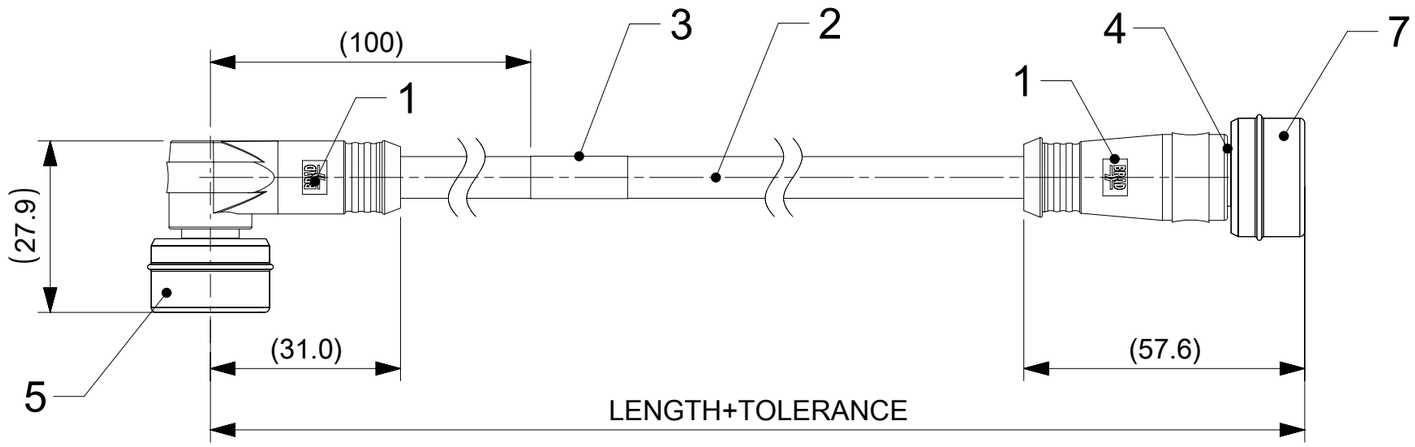

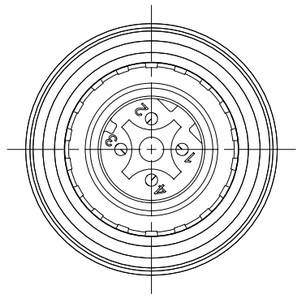

FRONT VIEW
SCALE 2:1

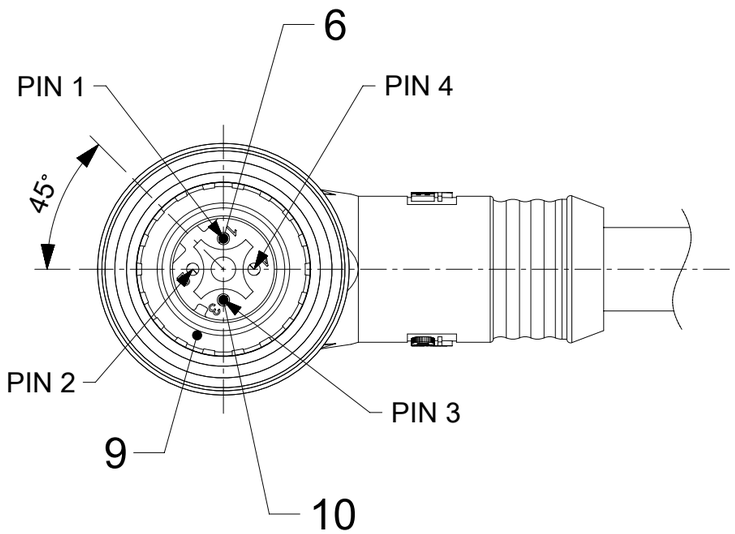

FRONT VIEW
SCALE 2:1

WIRING DIAGRAM

BOM

ITEM	QTY.	DESCRIPTION	MATERIAL	FINISH/COLOR
7	1	ULTRALOCK 4P STR ASSEMBLY	-	-
6	8	CONTACT 10 MA STA NI AU CR WRA 0.14-0.5	BRASS	SELECTIVE GOLD
5	1	ULTRALOCK 4P RA ASSEMBLY	-	-
4	1	SLEEVE	BRASS	NICKEL
3	1	LABEL	VINYL	YELLOW
2	-	CABLE	SEE SHEET 2	-
1	-	OVERMOULD	TPU	BLACK

NOTES:

1. MATERIALS : SEE BOM TABLE
2. FINISHES: SEE BOM TABLE
3. ELECTRICAL DATA:
   MAX. VOLTAGE RATING 60 VDC
   MAX. CURRENT PER CONTACT 1.5 A
4. ENVIRONMENTAL:
   STATIC OPERATING TEMP U12: -25°C to +85°C
   INDEX OF PROTECTION M12: IP67

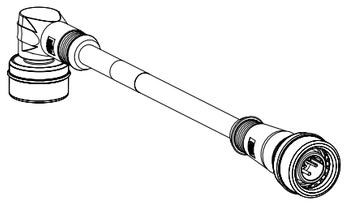

SCALE 1:2

THIS DRAWING CONTAINS INFORMATION THAT IS PROPRIETARY TO MOLEX ELECTRONIC TECHNOLOGIES, LLC AND SHOULD NOT BE USED WITHOUT WRITTEN PERMISSION

FUNCTIONAL SYMBOLS: F/A = 0; F/C = 0; F/F = 0

DIVISIONAL SYMBOLS

DIMENSION UNITS	SCALE
mm	1:1

GENERAL TOLERANCES (UNLESS SPECIFIED)

ANGULAR TOL	±	1.0 °
4 PLACES	±	
3 PLACES	±	
2 PLACES	±	0.05
1 PLACE	±	0.3
0 PLACES	±	0.5

DRAFT WHERE APPLICABLE MUST REMAIN WITHIN DIMENSIONS

CURRENT REV DESC:

EC NO: 703182
DRWN: SSM 2021/10/20
CHK'D: RSILLER 2022/04/14
APPR: RSILLER 2022/04/14

INITIAL REVISION:
DRWN: SSM 2021/07/01
APPR: RSILLER 2021/09/20

molex

MIC 4P M/MP ULOCK ST/90 XXXM PUR

PRODUCT CUSTOMER DRAWING

DOCUMENT NUMBER	DOC TYPE	DOC PART	REVISION
1201088234	PSD	000	A1

THIRD ANGLE PROJECTION	DRAWING	SERIES	MATERIAL NUMBER	CUSTOMER	SHEET NUMBER
	A3-SIZE	120108	SEE PART LIST	GENERAL MARKET	1 OF 2

DOCUMENT STATUS	P1	RELEASE DATE	2022/04/14 13:32:17

FORMAT: master-lb-prod-A3
REVISION: J
DATE: 2020/01/14

NUMERICAL CODE (Available parts see PART LIST table. Other parts available upon request).

OPTIONS

E	W	W	A	0	6	2	X	X	M	X	X	X	X

- E: E=Ethernet
- W W: Heads: W=Ultra-Lock U12 4P D-Code; W=Ultra-Lock U12 4P D-Code
- A: Wiring type
- 0 6 2: Heads style: 062=MA U12 RA 90° / MA U12 STR
- X X: Cable type: See cable table
- M: Units: M=Meter; T=10x meter
- X X X: Length Examples: 005=0.5 units; 010=1 units; 150=15 units
- X: H= 2 pcs. of I/D Carrier

CABLE INFORMATION (for more information see Cable Data Sheet).

CABLE TYPE	CABLE O.D.	APPLICATION	CROSS SECTION	CABLE JACKET	UL	TEMP. RANGE STATIC BENDING RADIUS STATIC	TEMP. RANGE DYNAMIC BENDING RADIUS DYNAMIC	CYCLES	ADITIONAL INFORMATION
11	6.8mm	PROFINET TYPE C	22AWG	PUR GREEN	STYLE 20549	-40°C to +80°C / min.5xO.D.	-20°C to +70°C / min.7.5xO.D.	up to 5 Mio	-
12	6.7mm	PROFINET TYPE C	22AWG	TPU BASED GREEN	STYLE 21215	-40°C to +80°C / min.5xO.D.	-25°C to +80°C / min.15xO.D.	about 2M, min.15xO.D., -5°C to +60°C	WSOR
16	6.5mm	-	24AWG	TPU BASED TEAL	STYLE 21215	-40°C to +80°C / min.6xO.D.	-20°C to +50°C	1M, min.10xO.D. / 2M min.20xO.D. @20°C	WSOR
17	8.0mm	PROFINET TYPE B & C	22AWG	TPE GREEN	STYLE 2463	-40°C to +75°C		1M min.10xO.D. / 10M min.20x0.D. @20°C	WSOR

PART LIST

No.	MOLEX P/N	ENGINEERING NO.	CABLE LENGTH
1	1201088234	EWWA06211M020	2m
2	1201088235	EWWA06211M050	5m
3	1201088236	EWWA06211M100	10m
4	1201088237	EWWA06211M150	15m
5	1201088238	EWWA06211M200	20m
6	1201088239	EWWA06211M300	30m
7	1201088240	EWWA06211M400	40m
8	1201088241	EWWA06211M600	60m
9	1201088242	EWWA06211M800	80m
10	1201088243	EWWA06211T100	100m
11			
12			
13			
14			
15			
16			
17			
18			
19			
20			
21			
22			
23			
24			
25			

CABLE LENGTH TOLERANCES

LENGTH	TOLERANCE
0 m-1 m	+40 mm
>1 m-5 m	+60 mm
>5 m-10 m	+80 mm
>10 m-20 m	+140 mm
>20 m-30 m	+160 mm
>30 m	+1% length

FUNCTIONAL SYMBOLS: FA = 0; FC = 0; FP = 0

DIVISIONAL SYMBOLS

DIMENSION UNITS	SCALE
mm	1:1

GENERAL TOLERANCES (UNLESS SPECIFIED)

ANGULAR TOL	±	1.0 °
4 PLACES	±	
3 PLACES	±	
2 PLACES	±	0.05
1 PLACE	±	0.3
0 PLACES	±	0.5

DRAFT WHERE APPLICABLE MUST REMAIN WITHIN DIMENSIONS

THIS DRAWING CONTAINS INFORMATION THAT IS PROPRIETARY TO MOLEX ELECTRONIC TECHNOLOGIES, LLC AND SHOULD NOT BE USED WITHOUT WRITTEN PERMISSION

CURRENT REV DESC:

EC NO: 703182
DRWN: SSM 2021/10/20
CHK'D: RSILLER 2022/04/14
APPR: RSILLER 2022/04/14

INITIAL REVISION:
DRWN: SSM 2021/07/01
APPR: RSILLER 2021/09/20

THIRD ANGLE PROJECTION

DRAWING: A3-SIZE
SERIES: 120108

molex

MIC 4P M/MP ULOCK ST/90 XXXM PUR

PRODUCT CUSTOMER DRAWING

DOCUMENT NUMBER	DOC TYPE	DOC PART	REVISION
1201088234	PSD	000	A1

MATERIAL NUMBER	CUSTOMER	SHEET NUMBER
SEE PART LIST	GENERAL MARKET	2 OF 2

DOCUMENT STATUS	P1	RELEASE DATE	2022/04/14 13:32:17

FORMAT: master-tb-prod-A3
REVISION: J
DATE: 2020/01/14

FRONT VIEW - MALE M12

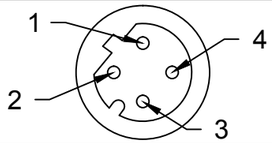

1-YELLOW
2-WHITE
3-ORANGE
4-BLUE

FRONT VIEW - MALE M12

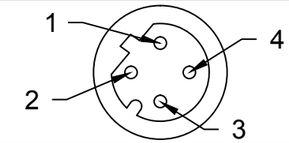

1-YELLOW
2-WHITE
3-ORANGE
4-BLUE

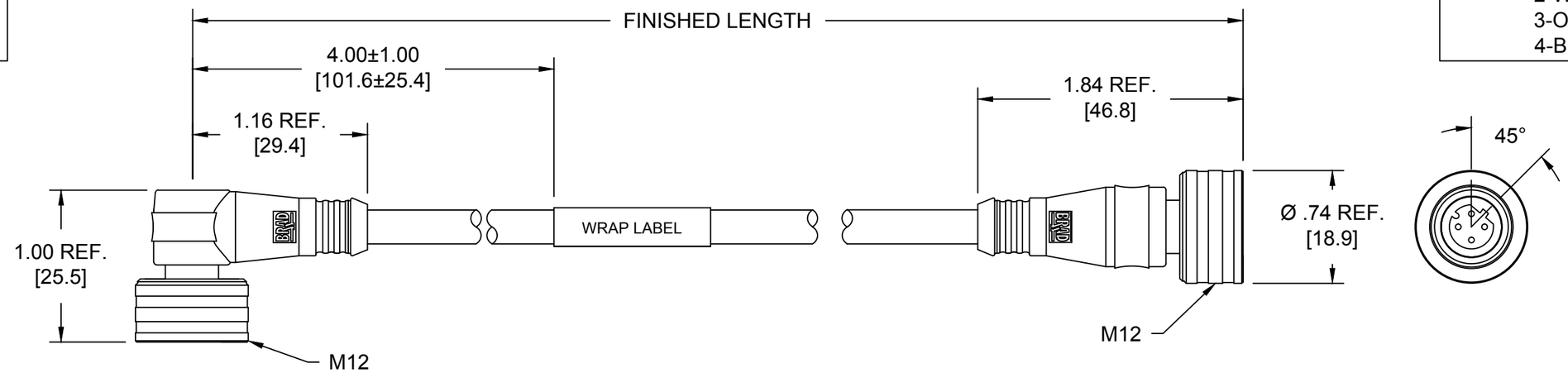

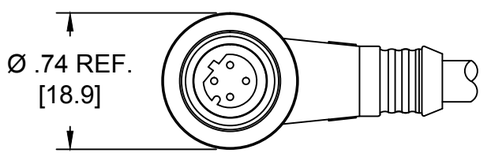

NOTES:

MECHANICAL

M12 CONNECTOR
INSERT: BLACK PUR
CONTACT: GOLD/NICKEL OVER COPPER ALLOY
COUPLING NUT: NICKEL PLATED BRASS
MOLDED BODY: BLACK PUR

CABLE: 22 AWG 4 CONDUCTORS SHIELDED GREEN PUR JACKET
AGENCY LISTED: UL AND CSA
CABLE MARKING: X N X 2x2xAWG22/7-9H(ST) C11Y INDUSTRIAL ETHERNET PROFINET TYP C E48408 cULus AWM STYLE 20236 AWM I/II A/B 80°C 30 V FT1

WRAP LABEL: MARKED WITH P/N, DATE CODE, VOLTAGE & AMPERAGE

ELECTRICAL
ACCORDING TO CAT5e
VOLTAGE RATING: 250V AC/DC
AMPERAGE: 4A

REV	DESCRIPTION
B	ADDED PART NO. TABLE EC NO: IPG2015-2010 DRWN: GGUSTAFS 2015/05/27 CH'KD: BARDEN 2015/07/23 APPR: BWOODMAN 2014/08/02

QUALITY SYMBOLS
▼=0
(C)=0

GENERAL TOLERANCES (UNLESS SPECIFIED)	mm	INCH
4 PLACES	±---	±---
3 PLACES	±---	±.005
2 PLACES	±0.13	±.010
1 PLACE	±0.25	±.020
ANGULAR ±1/2°		

DRAFT WHERE APPLICABLE MUST REMAIN WITHIN DIMENSIONS

DIMENSION STYLE: IN/MM
SCALE: NTS
DESIGN UNITS: INCH
THIRD ANGLE PROJECTION

DRAWN BY: BARDEN DATE: 2013/12/06
CHECKED BY: TWOLDEGE DATE: 2014/04/09
APPROVED BY: JFMURPHY DATE: 2014/08/02

TITLE: M12 ULOCK CABLE ASSY 4P M/MP ST/90 D-CODE 2X2X22AWG GREEN PUR

molex MOLEX INCORPORATED

MATERIAL NO.: SEE TABLE
DOCUMENT NO.: SD-120108-071
SHEET NO.: 1 OF 2
SIZE: B

THIS DRAWING CONTAINS INFORMATION THAT IS PROPRIETARY TO MOLEX INCORPORATED AND SHOULD NOT BE USED WITHOUT WRITTEN PERMISSION

MATERAIL NO.	ENGINEERING NO.
1201088234	EWWA06211M020
1201088235	EWWA06211M050
1201088236	EWWA06211M100
1201088237	EWWA06211M150
1201088238	EWWA06211M200
1201088239	EWWA06211M300
1201088240	EWWA06211M400
1201088241	EWWA06211M600
1201088242	EWWA06211M800
1201088243	EWWA06211T100

EWWA06211M020

CABLE TYPE
22/4AWG
PUR GREEN

CABLE LENGTH
010----1 Meter
100----10 Meters

REV	DESCRIPTION
B	ADDED PART NO. TABLE EC NO: IPG2015-2010 DRWN: GGUSTAFS 2015/05/27 CH'KD: BARDEN 2015/07/23 APPR: BWOODMAN 2014/08/02

QUALITY SYMBOLS
▼=0
(C)=0

GENERAL TOLERANCES (UNLESS SPECIFIED)	mm	INCH
4 PLACES	±---	±---
3 PLACES	±---	±.005
2 PLACES	±0.13	±.010
1 PLACE	±0.25	±.020
ANGULAR ±1/2°		

DRAFT WHERE APPLICABLE MUST REMAIN WITHIN DIMENSIONS

DIMENSION STYLE: IN/MM
SCALE: NTS
DESIGN UNITS: INCH
THIRD ANGLE PROJECTION

DRAWN BY: BARDEN DATE: 2013/12/06
CHECKED BY: TWOLDEGE DATE: 2014/04/09
APPROVED BY: JFMURPHY DATE: 2014/08/02

TITLE: M12 ULOCK CABLE ASSY 4P M/MP ST/90 D-CODE 2X2X22AWG GREEN PUR

molex MOLEX INCORPORATED

MATERIAL NO.: SEE TABLE
DOCUMENT NO.: SD-120108-071
SHEET NO.: 2 OF 2
SIZE: B

THIS DRAWING CONTAINS INFORMATION THAT IS PROPRIETARY TO MOLEX INCORPORATED AND SHOULD NOT BE USED WITHOUT WRITTEN PERMISSION