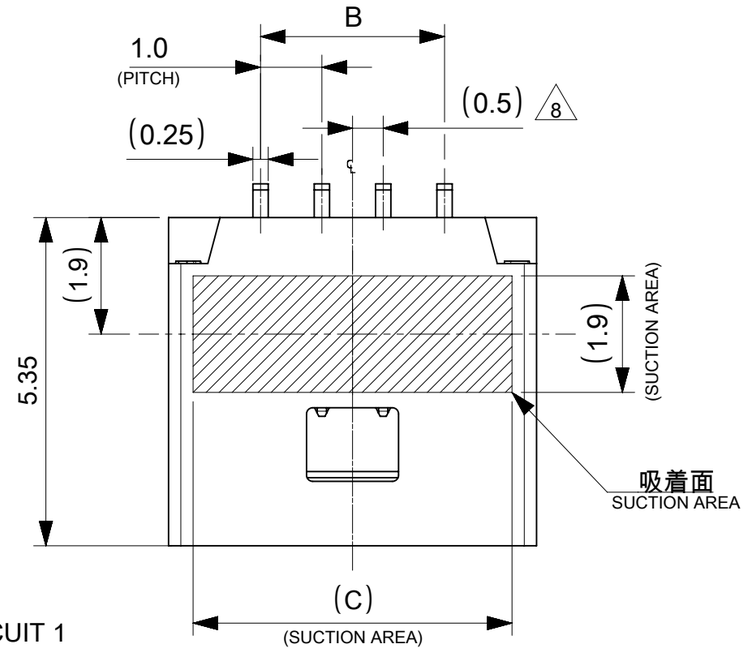

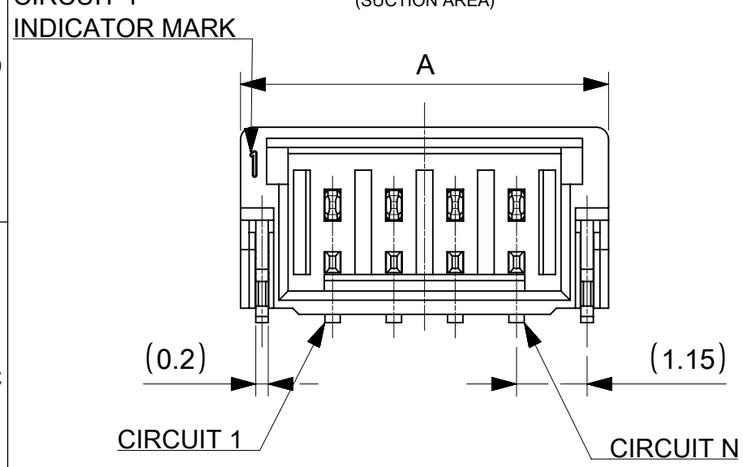

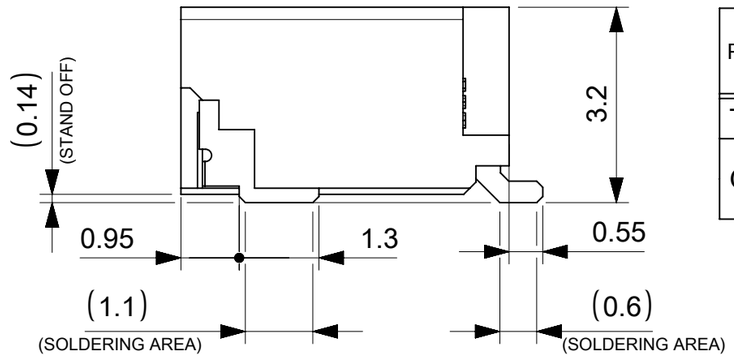

NOTES

1. 本製品は極数によって、ロック形状が変わりますので御注意願います。
   THE LOCK SHAPE OF THIS PRODUCT CHANGES ACCORDING TO THE NUMBER OF CIRCUIT.
   2~5 CIRCUITS：フリクションロック FRICTION LOCK
   6~15 CIRCUITS：インナーポジティブロック INNER POSITIVE LOCK
2. 材料及び仕上げ(めっき仕様)：TABLE 1,2 参照
   MATERIAL AND FINISHES : SEE TABLE 1 AND 2
3. 製品仕様書：5013300000-PS 000
   PRODUCT SPECIFICATION:
4. 梱包形態：SEE SHEET 4
   PACKAGING INFORMATION:
5. 嵌合相手：501330 シリーズ
   MATES WITH:501330 SERIES
6. アプリケーション仕様書(コネクタ取扱い説明書)：5013300000-AS 000
   APPLICATION SPECIFICATION(CONNECTOR MANUAL):
7. ソルダーピン及びネイルの平坦度:0.1 MAX.
   SOLDER PIN AND NAIL COPLANARITY: 0.1 MAX.
8. 偶数極に適用
   APPLY FOR EVEN CIRCUIT
9. その他金めっき厚品及び錫めっき品は以下の図面を御参照ください。
   PLEASE REFER TO THE FOLLOWING DRAWING
   FOR OTHER GOLD PLATING VERSION AND TIN PLATING VERSION.

PLATING	PLATING THICKNESS [micro-meter MIN.]	SERIES No.	DRAWING No.
TIN	1.0	501568	5015680000-SD PSD 000
GOLD	0.1	202396	2023960000-SD PSD 000
	0.76	203559	2035590000-SD PSD 000

2 TABLE 1

番号 NO.	部品 PART	材質 MATERIAL	
①	ウエハー WAFER	ポリアミド(PA), UL94V-0, 色：SEE SHEET 6 POLYAMIDE(PA), UL94V-0, COLOR : SEE SHEET 6	
②	ソルダーピン SOLDER PIN	リン青銅 PHOSPHOR BRONZE	
		接点部 CONTACT AREA	金めっき： 0.38 MICRO-METER MIN. GOLD PLATING
		テール部 TAIL AREA	金めっき： 0.05 MICRO-METER MIN. GOLD PLATING
		下地めっき UNDER PLATING	ニッケルめっき：1.27 MICRO-METER MIN. NICKEL
③	ネイル NAIL	黄銅 BRASS	
		テール部 TAIL AREA	錫めっき： 1.0 MICRO-METER MIN. MATTE TIN PLATING
		下地めっき UNDER PLATING	ニッケルめっき：1.0 MICRO-METER MIN. NICKEL

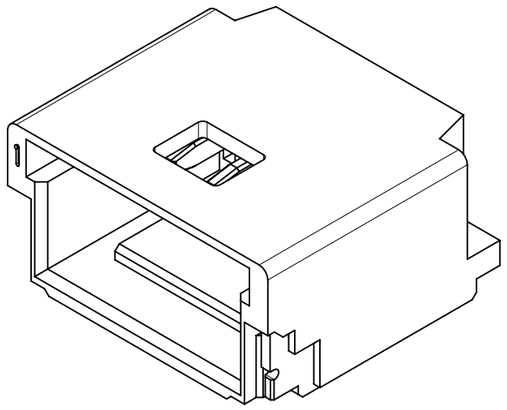

6.2	4.0	7.0	5
5.2	3.0	6.0	4
4.2	2.0	5.0	3
3.2	1.0	4.0	2
C	B	A	極数 CIRCUIT SIZE

THIS DRAWING CONTAINS INFORMATION THAT IS PROPRIETARY TO MOLEX ELECTRONIC TECHNOLOGIES, LLC AND SHOULD NOT BE USED WITHOUT WRITTEN PERMISSION

DIMENSION UNITS	SCALE
mm	NTS

GENERAL TOLERANCES (UNLESS SPECIFIED)

ANGULAR TOL	±	3.0 °
4 PLACES	±	0.2
3 PLACES	±	0.2
2 PLACES	±	0.2
1 PLACE	±	0.2
0 PLACES	±	0.2

DRAFT WHERE APPLICABLE MUST REMAIN WITHIN DIMENSIONS

CURRENT REV DESC:

EC NO: 698195
DRWN: MIKEDA01 2022/02/28
CHK'D: SAKIYAMA 2022/03/08
APPR: AIDA 2022/03/08

INITIAL REVISION:
DRWN: AISHIKAWA 2019/04/02
APPR: KOMURAKAMI 2019/04/05

THIRD ANGLE PROJECTION | DRAWING: A3-SIZE | SERIES: 203558

molex

PICO-CLASP 1.0 W/B
SINGLE ROW RA SMT INNER LOCK GOLD PLATING
0.38 MICRO-METER

PRODUCT CUSTOMER DRAWING

DOCUMENT NUMBER	DOC TYPE	DOC PART	REVISION
2035580000-SD	PSD	000	C

MATERIAL NUMBER	CUSTOMER	SHEET NUMBER
SEE SHEET 6		1 OF 6

DOCUMENT STATUS	P1	RELEASE DATE	2022/03/08 09:37:19

FORMAT: master-tb-prod-A3
REVISION: J1
DATE: 2021/05/01

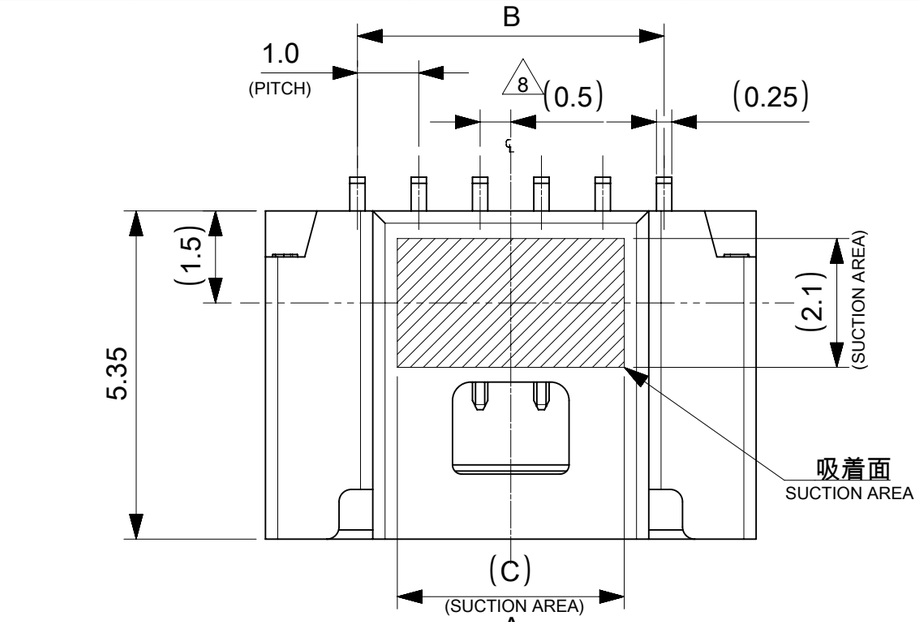

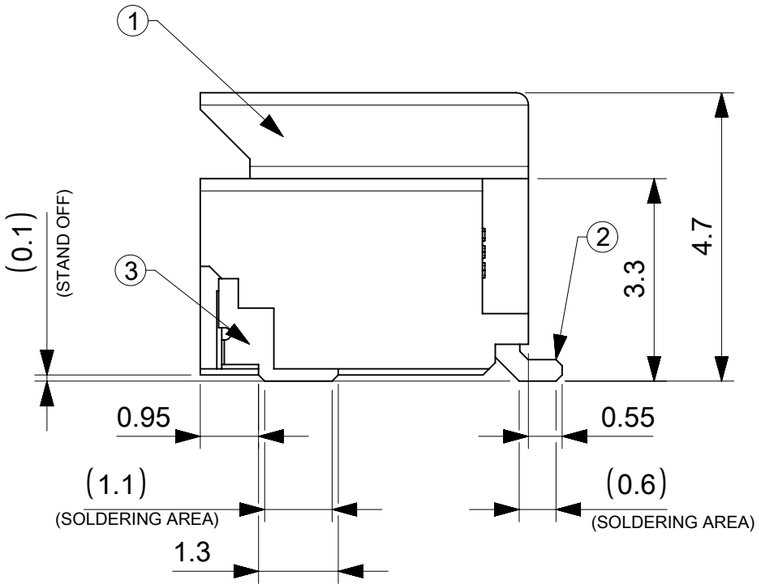

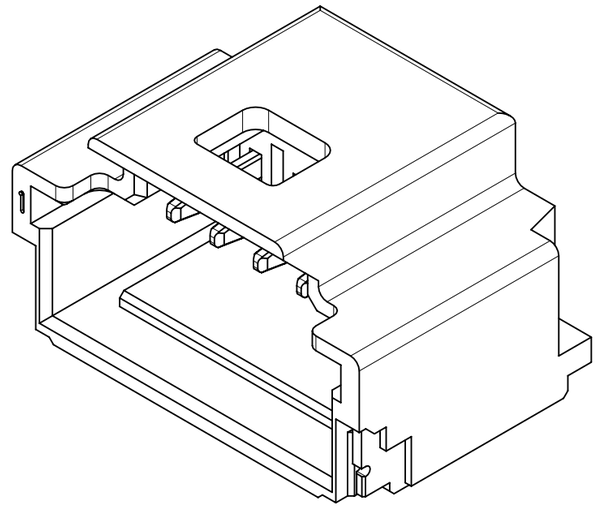

2 TABLE 2

番号 NO.	部品 PART	材質 MATERIAL	
1	ウエハー WAFER	ポリアミド(PA), UL94V-0, 色：SEE SHEET 6 POLYAMIDE(PA), UL94V-0, COLOR : SEE SHEET 6	
2	ソルダーピン SOLDER PIN	リン青銅 PHOSPHOR BRONZE	
		接点部 CONTACT AREA	金めっき： 0.38 MICRO-METER MIN. GOLD PLATING
		テール部 TAIL AREA	金めっき： 0.05 MICRO-METER MIN. GOLD PLATING
		下地めっき UNDER PLATING	ニッケルめっき：1.27 MICRO-METER MIN. NICKEL
3	ネイル NAIL	黄銅 BRASS	
		テール部 TAIL AREA	錫めっき： 1.0 MICRO-METER MIN. MATTE TIN PLATING
		下地めっき UNDER PLATING	ニッケルめっき：1.0 MICRO-METER MIN. NICKEL

12.7	14.0	17.0	15
11.7	13.0	16.0	14
10.7	12.0	15.0	13
9.7	11.0	14.0	12
8.7	10.0	13.0	11
7.7	9.0	12.0	10
6.7	8.0	11.0	9
5.7	7.0	10.0	8
4.7	6.0	9.0	7
3.7	5.0	8.0	6
C	B	A	極数 CIRCUIT SIZE

THIS DRAWING CONTAINS INFORMATION THAT IS PROPRIETARY TO MOLEX ELECTRONIC TECHNOLOGIES, LLC AND SHOULD NOT BE USED WITHOUT WRITTEN PERMISSION

DIMENSION UNITS	SCALE
mm	NTS

GENERAL TOLERANCES (UNLESS SPECIFIED)

ANGULAR TOL	±	3.0 °
4 PLACES	±	0.2
3 PLACES	±	0.2
2 PLACES	±	0.2
1 PLACE	±	0.2
0 PLACES	±	0.2

DRAFT WHERE APPLICABLE MUST REMAIN WITHIN DIMENSIONS

CURRENT REV DESC:

EC NO: 698195
DRWN: MIKEDA01 2022/02/28
CHK'D: SAKIYAMA 2022/03/08
APPR: AIDA 2022/03/08

INITIAL REVISION:
DRWN: AISHIKAWA 2019/04/02
APPR: KOMURAKAMI 2019/04/05

THIRD ANGLE PROJECTION | DRAWING: A3-SIZE | SERIES: 203558

molex

PICO-CLASP 1.0 W/B
SINGLE ROW RA SMT INNER LOCK GOLD PLATING
0.38 MICRO-METER

PRODUCT CUSTOMER DRAWING

DOCUMENT NUMBER	DOC TYPE	DOC PART	REVISION
2035580000-SD	PSD	000	C

MATERIAL NUMBER	CUSTOMER	SHEET NUMBER
SEE SHEET 6		2 OF 6

DOCUMENT STATUS	P1	RELEASE DATE	2022/03/08 09:37:19

FORMAT: master-tb-prod-A3
REVISION: J1
DATE: 2021/05/01

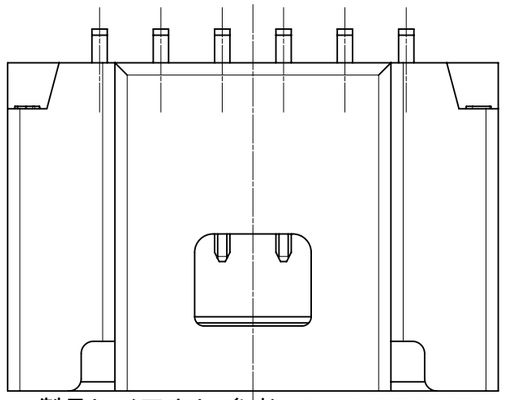

製品レイアウト(参考：6~15 CIRCUITS)
PRODUCT LAYOUT(REFERENCE:6~15 CIRCUITS)

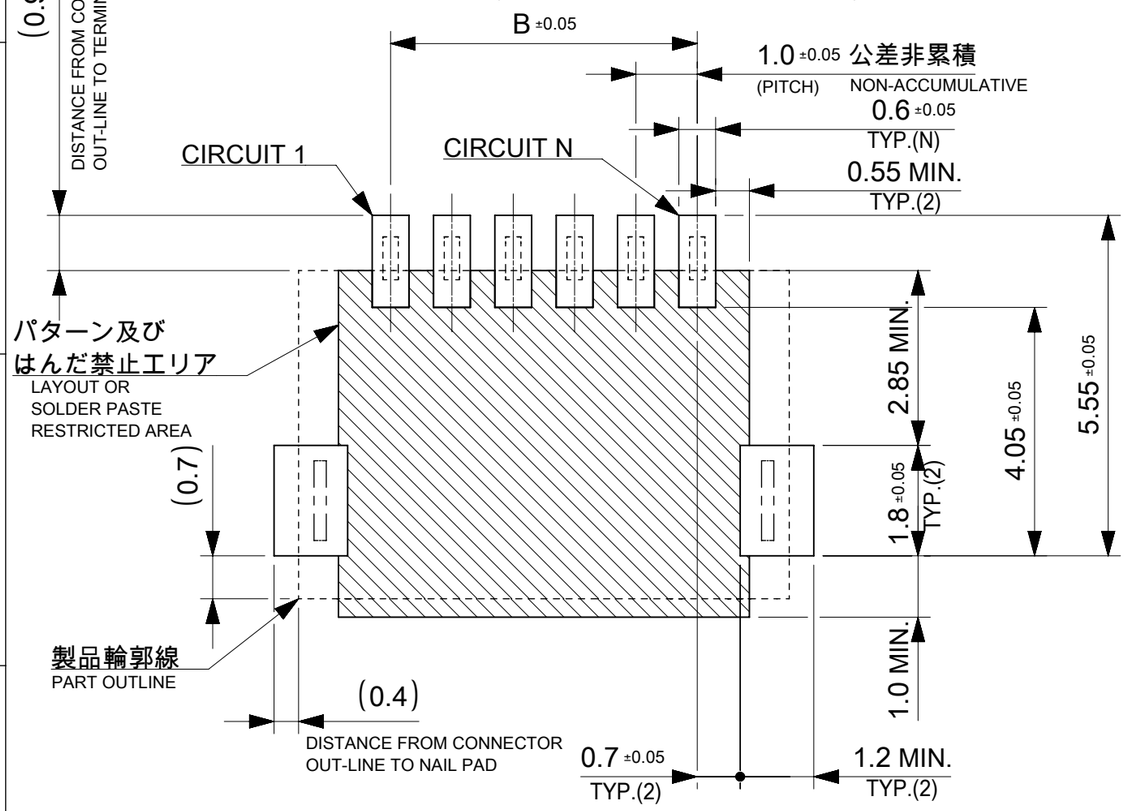

推奨基板レイアウト(全極数適用)：実装面側
(参考：基板厚 1.0mm, メタルマスク厚さ 0.12mm, マスク開口率100%)

POLARIZED RECOMMENDED PCB LAYOUT(APPLY TO ALL CIRCUITS) : COMPONENT SIDE
(REFERENCE: PCB THICKNESS 1.0mm, STENCIL THICKNESS 0.12mm, APERTURE RATIO 100%)

:パターン禁止エリア
RESTRICTED AREA
NO PCB COMPONENTS ALLOWED

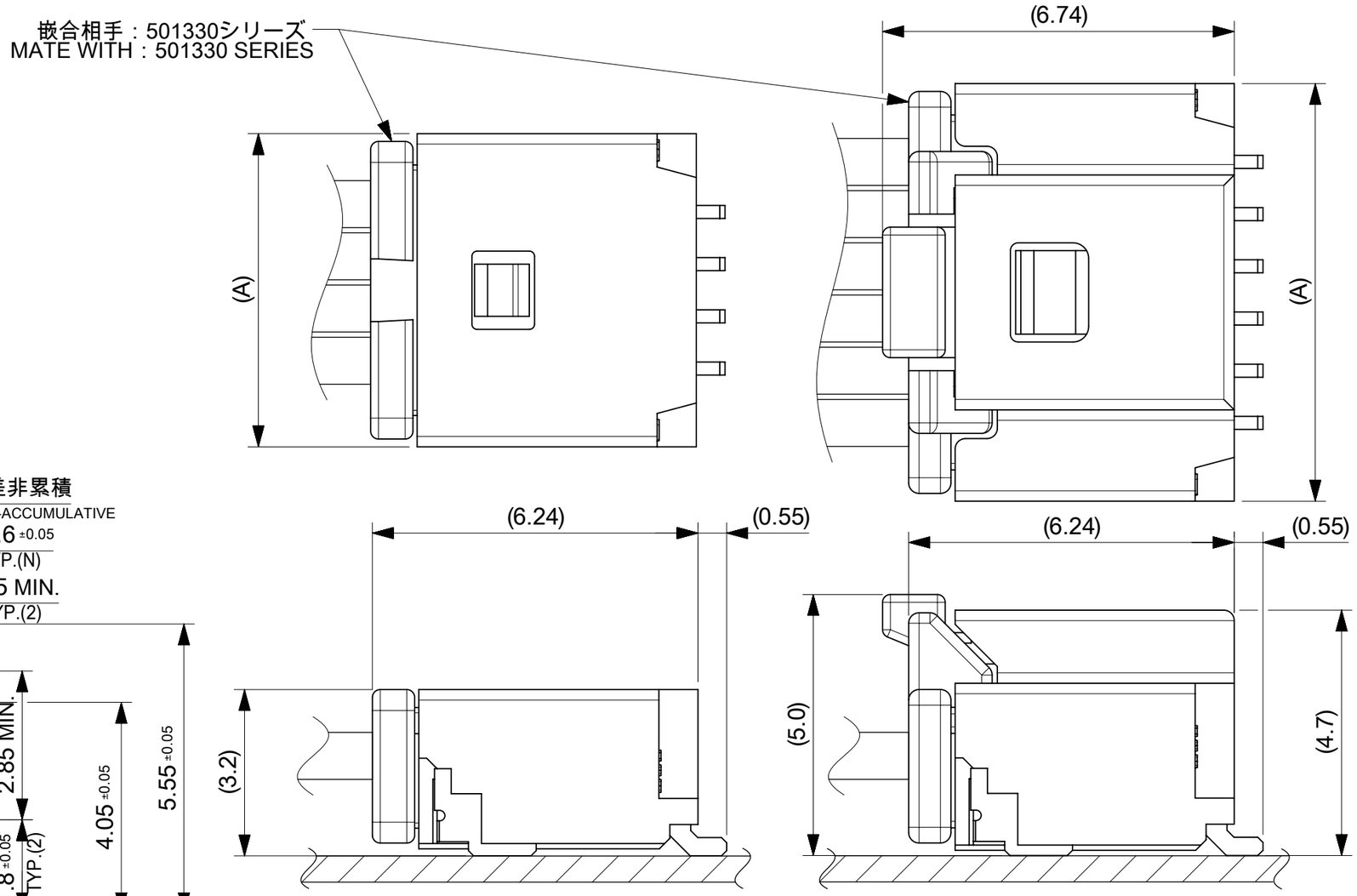

a) 2~5 CIRCUITS

b) 6~15 CIRCUITS

嵌合図
MATED CONNECTORS

THIS DRAWING CONTAINS INFORMATION THAT IS PROPRIETARY TO MOLEX ELECTRONIC TECHNOLOGIES, LLC AND SHOULD NOT BE USED WITHOUT WRITTEN PERMISSION

DIMENSION UNITS	SCALE
mm	NTS

GENERAL TOLERANCES (UNLESS SPECIFIED)

ANGULAR TOL	±	3.0 °
4 PLACES	±	0.2
3 PLACES	±	0.2
2 PLACES	±	0.2
1 PLACE	±	0.2
0 PLACES	±	0.2

DRAFT WHERE APPLICABLE MUST REMAIN WITHIN DIMENSIONS

CURRENT REV DESC:

EC NO: 698195
DRWN: MIKEDA01 2022/02/28
CHK'D: SAKIYAMA 2022/03/08
APPR: AIDA 2022/03/08

INITIAL REVISION:
DRWN: AISHIKAWA 2019/04/02
APPR: KOMURAKAMI 2019/04/05

THIRD ANGLE PROJECTION | DRAWING: A3-SIZE | SERIES: 203558

molex

PICO-CLASP 1.0 W/B
SINGLE ROW RA SMT INNER LOCK GOLD PLATING
0.38 MICRO-METER

PRODUCT CUSTOMER DRAWING

DOCUMENT NUMBER	DOC TYPE	DOC PART	REVISION
2035580000-SD	PSD	000	C

MATERIAL NUMBER	CUSTOMER	SHEET NUMBER
SEE SHEET 6		3 OF 6

DOCUMENT STATUS	P1	RELEASE DATE	2022/03/08 09:37:19

FORMAT: master-tb-prod-A3
REVISION: J1
DATE: 2021/05/01

NOTES

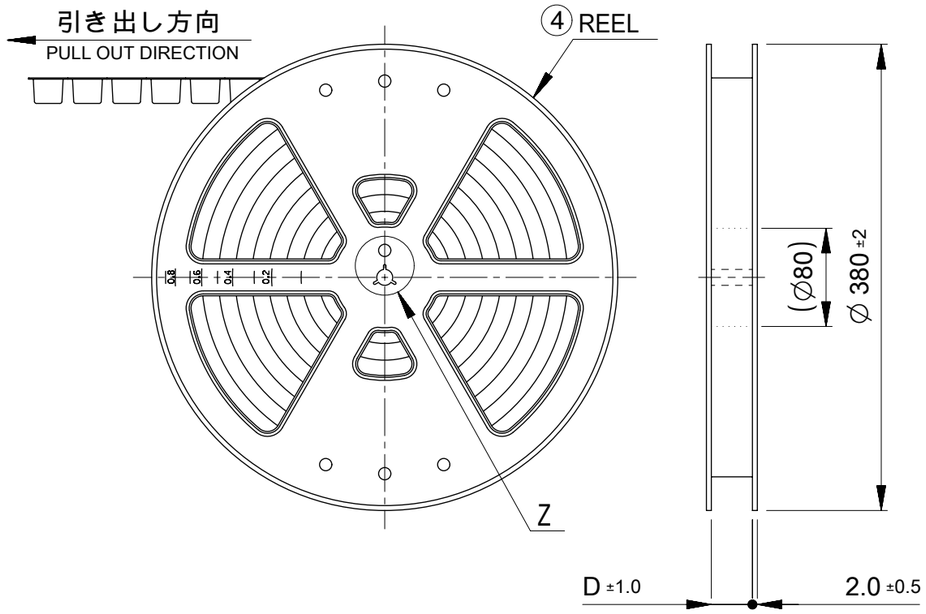

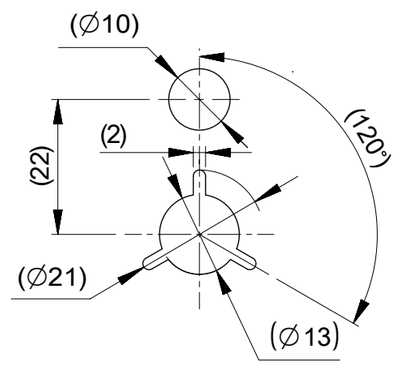

DETAIL Z

10. 梱包数量
    2-5 CIRCUIT: 1700個/リール
    6-15 CIRCUIT: 1300個/リール
    NUMBER OF CONNECTORS
    2-5 CIRCUIT : 1700 PIECES/REEL
    6-15 CIRCUIT : 1300 PIECES/REEL
11. リードテープ長さ
    LEAD TAPE LENGTH

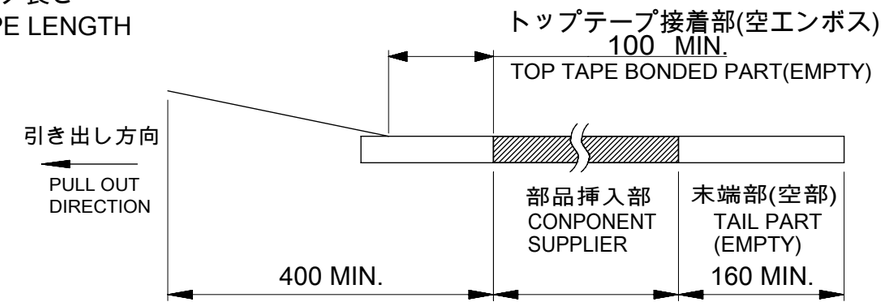

12. トップテープの剥離強度はIEC60286-3に準拠。
    TOP TAPE PEELING FORCE IS DEFINED BY IEC60286-3.
13. 2~5極品は乾燥剤入り、ハイバリア梱包による納品となります。
    2~5 CIRCUITS IS DELIVERED IN A HIGH BARRIER PACKAGING WITH DESICCANT.
14. 梱包仕様書：2035589200 PS 200
    PACKAGE SPECIFICATION:
15. 発注番号：SHEET 6 参照
    ORDER No.：PLEASE REFER TO SHEET 6 FOR PRODUCT LIST.

203558 - ** * *

極数 CIRCUIT SIZE	ハウジングカラー HOUSING COLOR	製品識別番号 IDENTIFICATION NUMBER
	0:NATURAL(BEIGE)	7:EMBOSSED PACKAGE

33.4	15	
	14	
	13	
25.4	12	
	11	
	10	
	9	
	8	
	7	
	6	
17.5	5	
	4	
	3	
	2	
D	極数 CIRCUIT SIZE	

番号 NO.	部品 PART	材質 MATERIAL
④	リール REEL	ポリスチレン(PS) <リサイクル材を含む> POLYSTYRENE(PS) <RECYCLE MATERIAL CONTAINED>

DOCUMENT STATUS	P1	RELEASE DATE	2022/03/08 09:37:19

THIS DRAWING CONTAINS INFORMATION THAT IS PROPRIETARY TO MOLEX ELECTRONIC TECHNOLOGIES, LLC AND SHOULD NOT BE USED WITHOUT WRITTEN PERMISSION

DIMENSION UNITS	SCALE
mm	NTS

GENERAL TOLERANCES (UNLESS SPECIFIED)

ANGULAR TOL	±	3.0 °
4 PLACES	±	0.2
3 PLACES	±	0.2
2 PLACES	±	0.2
1 PLACE	±	0.2
0 PLACES	±	0.2

DRAFT WHERE APPLICABLE MUST REMAIN WITHIN DIMENSIONS

CURRENT REV DESC:

EC NO: 698195
DRWN: MIKEDA01 2022/02/28
CHK'D: SAKIYAMA 2022/03/08
APPR: AIDA 2022/03/08

INITIAL REVISION:
DRWN: AISHIKAWA 2019/04/02
APPR: KOMURAKAMI 2019/04/05

THIRD ANGLE PROJECTION | DRAWING: A3-SIZE | SERIES: 203558

molex

PICO-CLASP 1.0 W/B
SINGLE ROW RA SMT INNER LOCK GOLD PLATING
0.38 MICRO-METER

PRODUCT CUSTOMER DRAWING

DOCUMENT NUMBER	DOC TYPE	DOC PART	REVISION
2035580000-SD	PSD	000	C

MATERIAL NUMBER	CUSTOMER	SHEET NUMBER
SEE SHEET 6		4 OF 6

FORMAT: master-tb-prod-A3
REVISION: J1
DATE: 2021/05/01

2~5 CIRCUITS

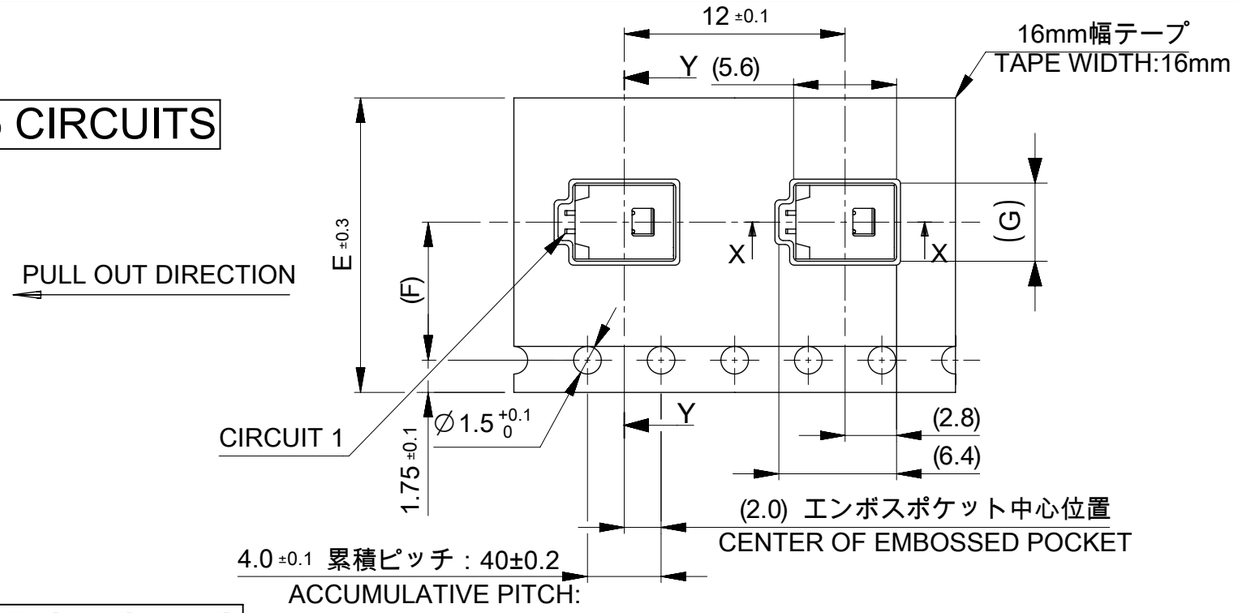

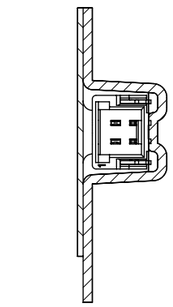

SECTION Y-Y

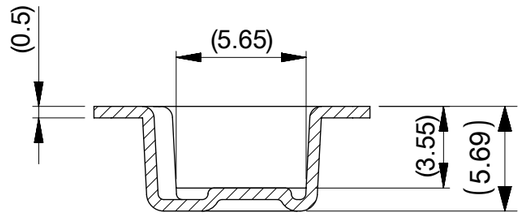

SECTION X-X

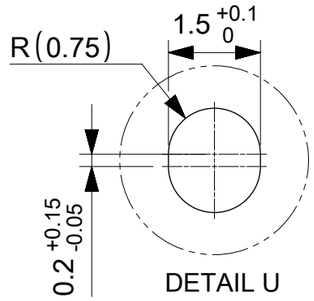

DETAIL U

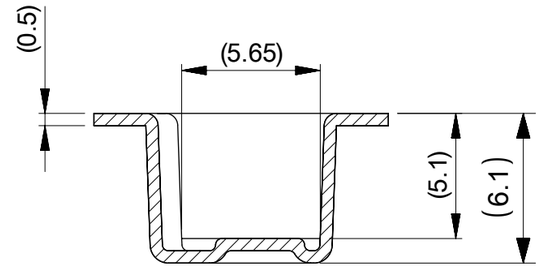

SECTION V-V

6~15 CIRCUITS

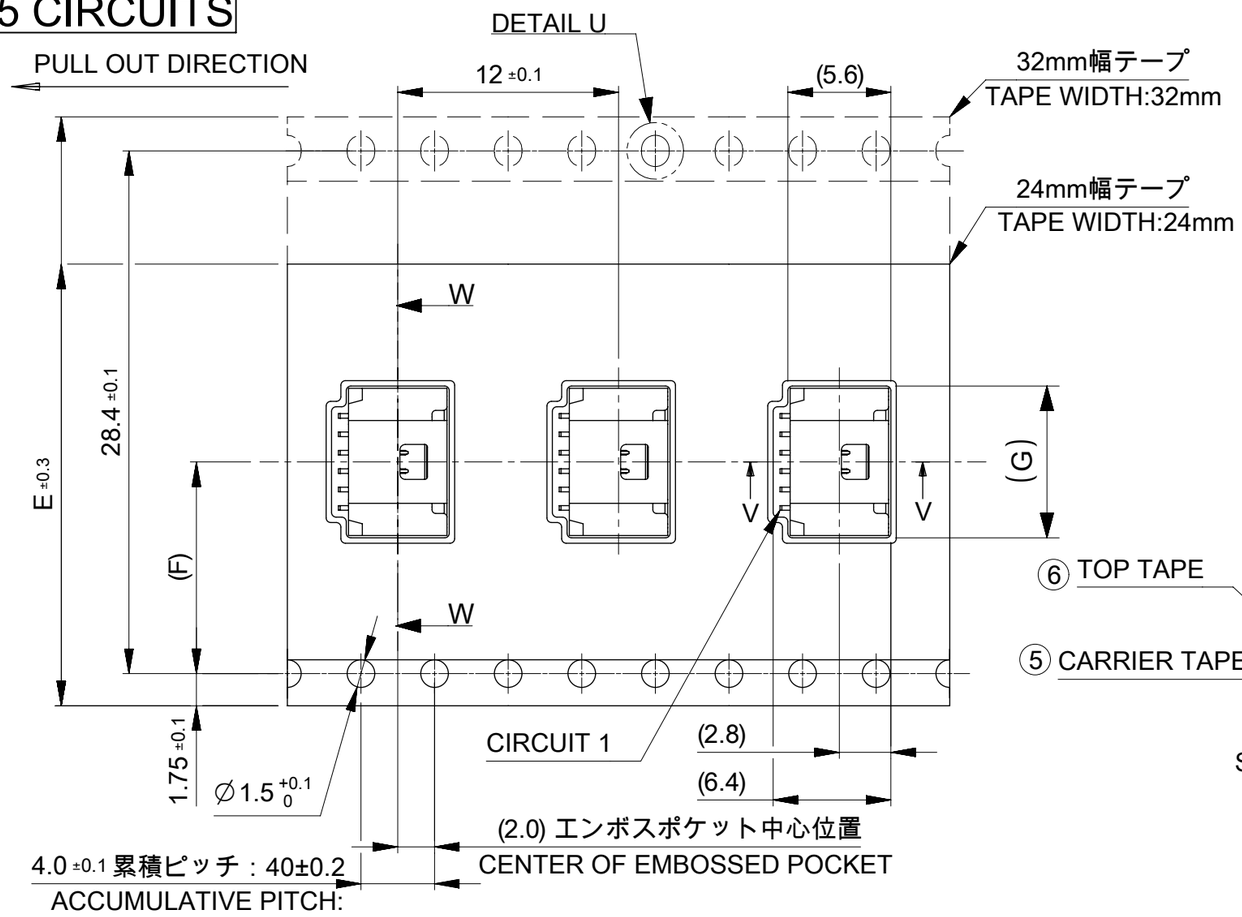

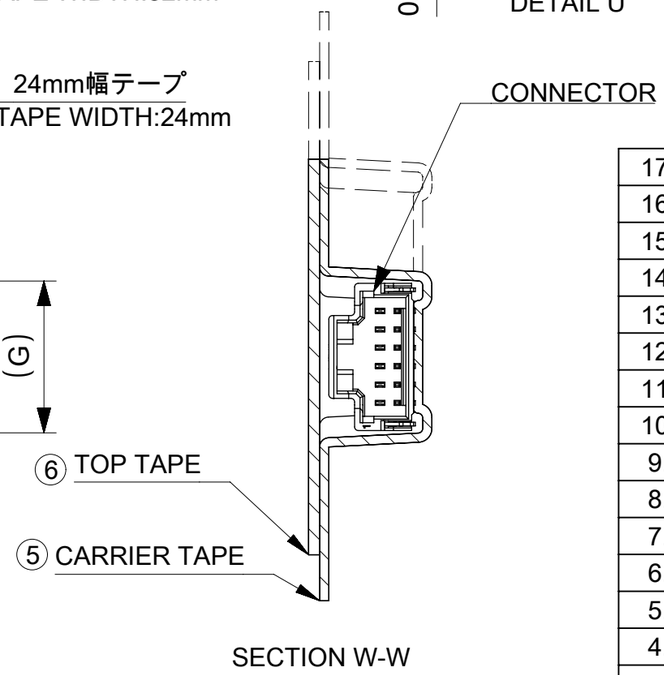

SECTION W-W

17.3	14.2	32	15
16.3			14
15.3			13
14.3	11.5	24	12
13.3			11
12.3			10
11.3			9
10.3			8
9.3			7
8.3			6
7.3	7.5	16	5
6.3			4
5.3			3
4.3			2
G	コネクタ中心位置 F SENTER OF CONNECTOR	エンボステープ幅 E WIDTH OF TAPE	極数 CIRCUIT SIZE

番号 NO.	部品 PART	材質 MATERIAL
⑤	キャリアテープ CARRIER TAPE	ポリプロピレン(PP)、その他 POLYPROPYLENE(PP), etc
⑥	トップテープ TOP TAPE	ポリエチレン(PE)、その他 POLYETHYLENE(PE), etc

DOCUMENT STATUS	P1	RELEASE DATE	2022/03/08 09:37:19

THIS DRAWING CONTAINS INFORMATION THAT IS PROPRIETARY TO MOLEX ELECTRONIC TECHNOLOGIES, LLC AND SHOULD NOT BE USED WITHOUT WRITTEN PERMISSION

DIMENSION UNITS	SCALE
mm	NTS

GENERAL TOLERANCES (UNLESS SPECIFIED)

ANGULAR TOL	±	3.0 °
4 PLACES	±	0.2
3 PLACES	±	0.2
2 PLACES	±	0.2
1 PLACE	±	0.2
0 PLACES	±	0.2

DRAFT WHERE APPLICABLE MUST REMAIN WITHIN DIMENSIONS

CURRENT REV DESC:

EC NO: 698195
DRWN: MIKEDA01 2022/02/28
CHK'D: SAKIYAMA 2022/03/08
APPR: AIDA 2022/03/08

INITIAL REVISION:
DRWN: AISHIKAWA 2019/04/02
APPR: KOMURAKAMI 2019/04/05

THIRD ANGLE PROJECTION | DRAWING: A3-SIZE | SERIES: 203558

molex

PICO-CLASP 1.0 W/B
SINGLE ROW RA SMT INNER LOCK GOLD PLATING
0.38 MICRO-METER

PRODUCT CUSTOMER DRAWING

DOCUMENT NUMBER	DOC TYPE	DOC PART	REVISION
2035580000-SD	PSD	000	C

MATERIAL NUMBER	CUSTOMER	SHEET NUMBER
SEE SHEET 6		5 OF 6

FORMAT: master-tb-prod-A3
REVISION: J1
DATE: 2021/05/01

13 15 製品一覧 PRODUCT LIST

HOUSING COLOR	
NATURAL(BEIGE)	
203558 1507	15
1407	14
1307	13
1207	12
1107	11
1007	10
0907	9
0807	8
0707	7
0607	6
0507	5
0407	4
0307	3
203558 0207	2

発注番号 ORDER No.	極数 CIRCUIT SIZE
梱包形態：エンボスリール PACKAGE:EMBOSSED REEL	

THIS DRAWING CONTAINS INFORMATION THAT IS PROPRIETARY TO MOLEX ELECTRONIC TECHNOLOGIES, LLC AND SHOULD NOT BE USED WITHOUT WRITTEN PERMISSION

DIMENSION UNITS	SCALE
mm	NTS

GENERAL TOLERANCES (UNLESS SPECIFIED)		
ANGULAR TOL	±	3.0 °
4 PLACES	±	0.2
3 PLACES	±	0.2
2 PLACES	±	0.2
1 PLACE	±	0.2
0 PLACES	±	0.2

DRAFT WHERE APPLICABLE MUST REMAIN WITHIN DIMENSIONS

CURRENT REV DESC:

EC NO: 698195
DRWN: MIKEDA01 2022/02/28
CHK'D: SAKIYAMA 2022/03/08
APPR: AIDA 2022/03/08

INITIAL REVISION:
DRWN: AISHIKAWA 2019/04/02
APPR: KOMURAKAMI 2019/04/05

THIRD ANGLE PROJECTION | DRAWING: A3-SIZE | SERIES: 203558

molex

PICO-CLASP 1.0 W/B
SINGLE ROW RA SMT INNER LOCK GOLD PLATING
0.38 MICRO-METER

PRODUCT CUSTOMER DRAWING

DOCUMENT NUMBER	DOC TYPE	DOC PART	REVISION
2035580000-SD	PSD	000	C

MATERIAL NUMBER	CUSTOMER	SHEET NUMBER
SEE SHEET 6		6 OF 6

DOCUMENT STATUS	P1	RELEASE DATE	2022/03/08 09:37:19

FORMAT: master-ib-prod-A3
REVISION: J1
DATE: 2021/05/01