Part Number: XZMYK55W-3

3.2 x 1.6 mm SMD Chip LED Lamp

Features

- Ideal for indication light on hand held products
- Long life and robust package
- Standard Package: 2,000pcs/ Reel
- MSL (Moisture Sensitivity Level): 3
- Halogen-free
- RoHS compliant

ATTENTION
OBSERVE PRECAUTIONS
FOR HANDLING
ELECTROSTATIC
DISCHARGE
SENSITIVE
DEVICES

Package Schematics

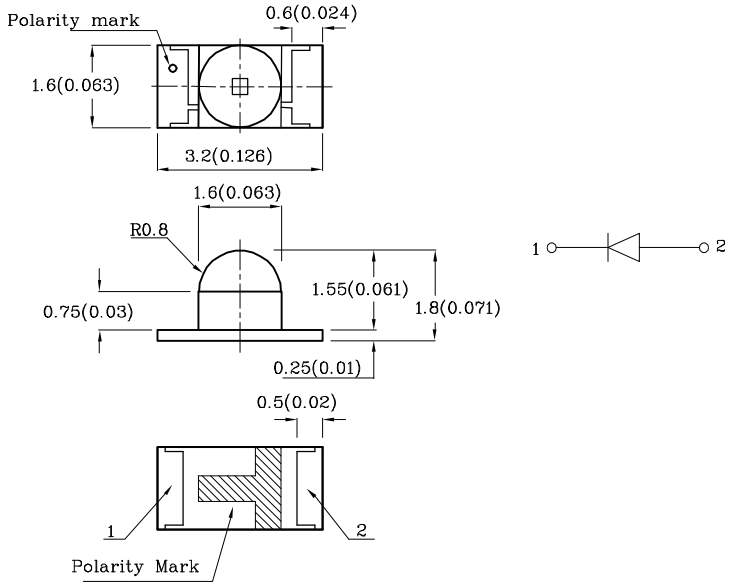

Notes:
1. All dimensions are in millimeters (inches).
2. Tolerance is ±0.2(0.008") unless otherwise noted.
3. Specifications are subject to change without notice.

Absolute Maximum Ratings (T_A=25°C)		Yellow (AlGaInP)	Unit
Reverse Voltage	V_R	5	V
Forward Current	I_F	30	mA
Forward Current (Peak) 1/10 Duty Cycle 0.1ms Pulse Width	i_{FS}	175	mA
Power Dissipation	P_D	75	mW
Operating Temperature	T_A	-40 ~ +85	°C
Storage Temperature	Tstg	-40 ~ +85	

A Relative Humidity between 40% and 60% is recommended in ESD-protected work areas to reduce static build up during assembly process (Reference JEDEC/JESD625-A and JEDEC/J-STD-033)

Operating Characteristics (T_A=25°C)		Yellow (AlGaInP)	Unit
Forward Voltage (Typ.) (I_F=20mA)	V_F	2	V
Forward Voltage (Max.) (I_F=20mA)	V_F	2.5	V
Reverse Current (Max.) (V_R=5V)	I_R	10	µA
Wavelength of Peak Emission CIE127-2007* (Typ.) (I_F=20mA)	λP	590*	nm
Wavelength of Dominant Emission CIE127-2007* (Typ.) (I_F=20mA)	λD	590*	nm
Spectral Line Full Width At Half-Maximum (Typ.) (I_F=20mA)	△λ	20	nm
Capacitance (Typ.) (V_F=0V, f=1MHz)	C	20	pF

Part Number	Emitting Color	Emitting Material	Lens-color	Luminous Intensity CIE127-2007* (I_F=20mA) mcd		Wavelength CIE127-2007* nm λP	Viewing Angle 2θ 1/2
				min.	typ.		
XZMYK55W-3	Yellow	AlGaInP	Water Clear	700*	795*	590*	40°

*Luminous intensity value and wavelength are in accordance with CIE127-2007 standards.

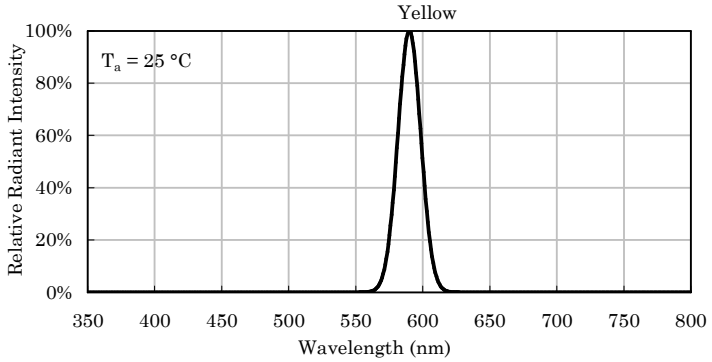

Relative Intensity Vs. CIE Wavelength

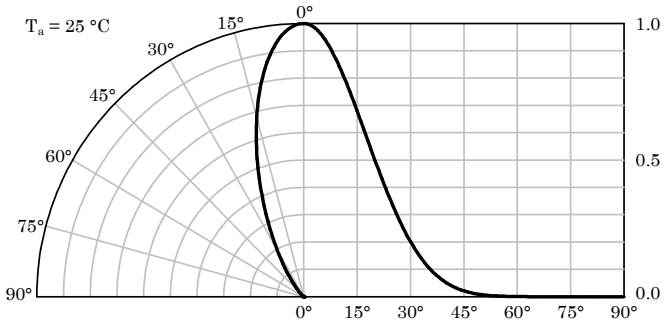

Spatial Distribution

❖ Yellow

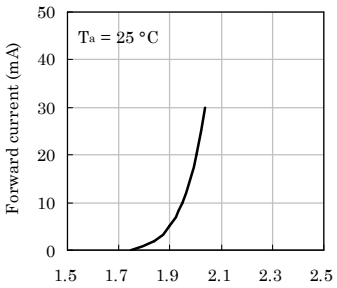

Forward Current vs.
Forward Voltage

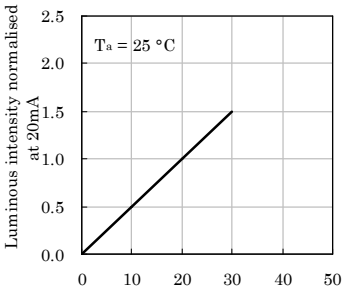

Luminous Intensity vs.
Forward Current

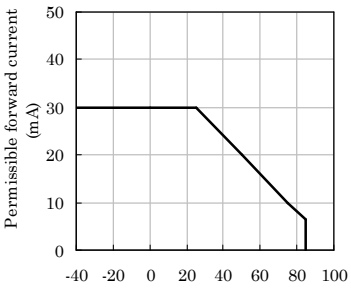

Forward Current
Derating Curve

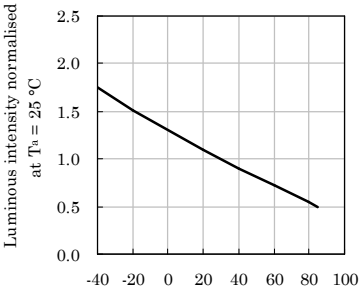

Luminous Intensity vs.
Ambient Temperature

LED is recommended for reflow soldering and soldering profile is shown below.

Reflow Soldering Profile for SMD Products (Pb−Free Components)

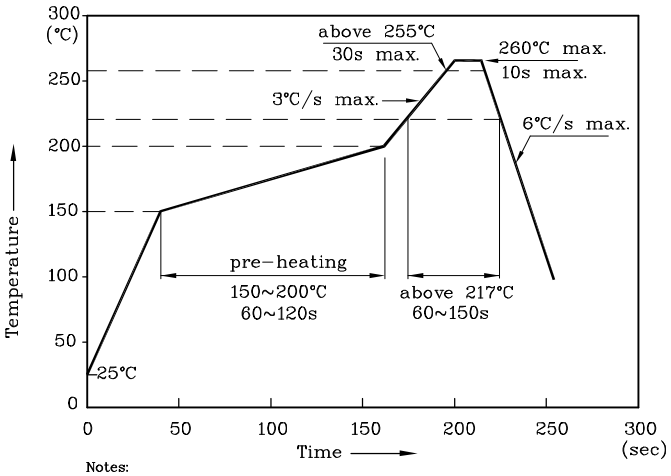

Notes:

1. All temperatures refer to the center of the package, measured on the package body surface facing up during reflow.
2. Do not apply any stress to the LED during high temperature conditions.
3. Maximum number of soldering passes: 2

❖ The device has a single mounting surface. The device must be mounted according to the specifications.

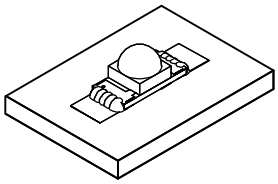

❖ Recommended Soldering Pattern (Units : mm; Tolerance: ± 0.1)

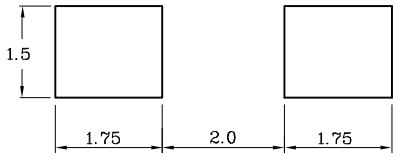

❖ Reel Dimension (Units : mm)

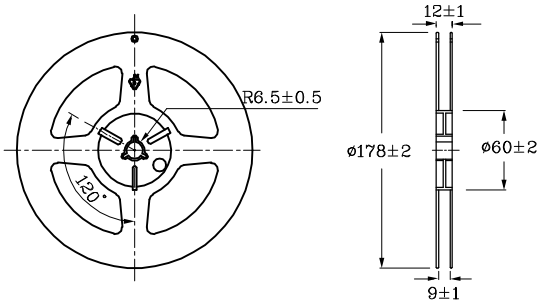

❖ Tape Specification (Units : mm)

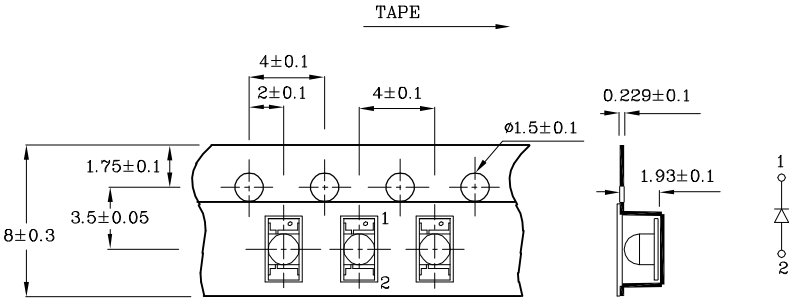

Remarks:

If special sorting is required (e.g. binning based on forward voltage, Luminous intensity / luminous flux, or wavelength), the typical accuracy of the sorting process is as follows:

1. Wavelength: +/-1nm
2. Luminous intensity / luminous flux: +/-15%
3. Forward Voltage: +/-0.1V

Note: Accuracy may depend on the sorting parameters.

PACKING & LABEL SPECIFICATIONS

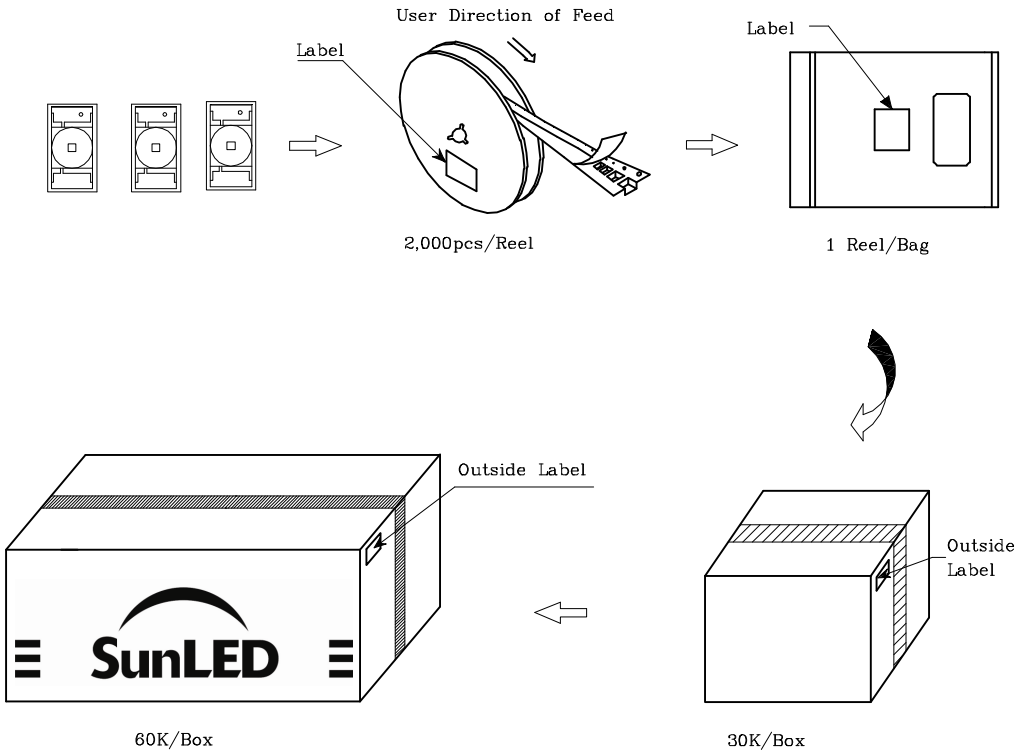

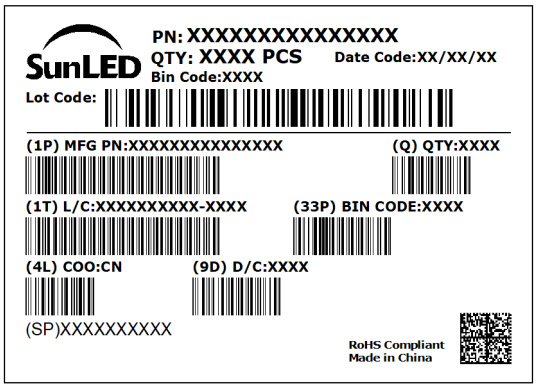

TERMS OF USE

1. Data presented in this document reflect statistical figures and should be treated as technical reference only.
2. Contents within this document are subject to improvement and enhancement changes without notice.
3. The product(s) in this document are designed to be operated within the electrical and environmental specifications indicated on the datasheet. User accepts full risk and responsibility when operating the product(s) beyond their intended specifications.
4. The product(s) described in this document are intended for electronic applications in which a person's life is not reliant upon the LED. Please consult with a SunLED representative for special applications where the LED may have a direct impact on a person's life.
5. The contents within this document may not be altered without prior consent by SunLED.
6. Additional technical notes are available at https://www.SunLEDusa.com/TechnicalNotes.asp