# SQUARE FLANGE PLUG RECEPTACLE WITH SOLDER POT CONTACT

# R125.433.001

Series : **SMA**

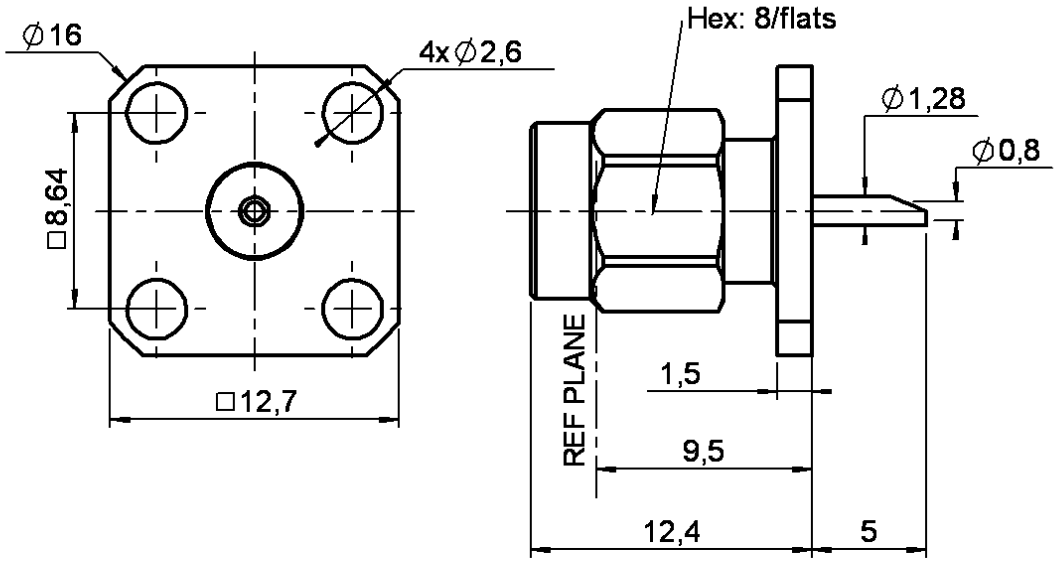


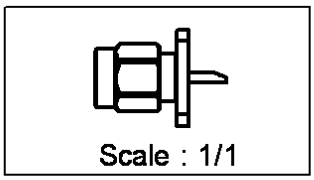


**PANEL CUT OUT**

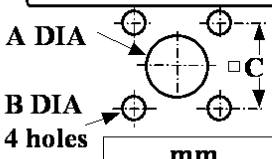


| | mm | |
|---|---|---|
| | **Maxi** | **mini** |
| **A** | **4.2** | **4.1** |
| **B** | **2.7** | **2.6** |
| **C** | **8.69** | **8.59** |

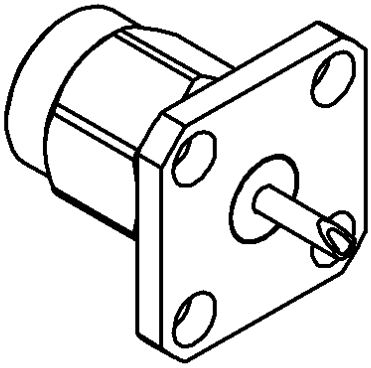

All dimensions are in mm.

| COMPONENTS | MATERIALS | PLATINGS (µm) |
|---|---|---|
| **BODY** | **STAINLESS STEEL** | **PASSIVATED .** |
| **CENTER CONTACT** | **BRASS** | **GOLD 1.3 OVER NICKEL 2** |
| **OUTER CONTACT** | - | - |
| **INSULATOR** | **PTFE** | |
| **GASKET** | **SILICONE RUBBER** | |
| **OTHERS PARTS** | **STAINLESS STEEL** | **PASSIVATED .** |
| - | - | - |
| - | - | - |

**Issue :** 0147 F

In the effort to improve our products, we reserve the right to make changes judged to be necessary.

RADIALL®

# SQUARE FLANGE PLUG RECEPTACLE WITH SOLDER POT CONTACT

# R125.433.001

Series : **SMA**

## PACKAGING

| Standard | Unit | Other |
|---|---|---|
| **100** | **'W' option** | **Contact us** |

## SPECIFICATION

## ELECTRICAL CHARACTERISTICS

| | | | | |
|---|---|---|---|---|
| Impedance | | | **50** | Ω |
| Frequency | | | **0-18** | GHz |
| VSWR | **1.04** | + | **0.004** | x F(GHz) Maxi |
| Insertion loss | | | **0.05*** | √F(GHz) dB Maxi |
| RF leakage | | - ( | **100** | - F(GHz)) dB Maxi |
| Voltage rating | | | **500** | Veff Maxi |
| Dielectric withstanding voltage | | | **1000** | Veff mini |
| Insulation resistance | | | **5000** | MΩ mini |

## ENVIRONMENTAL

| | | |
|---|---|---|
| Operating temperature | **-65/+165** | ° C |
| Hermetic seal | **NA** | Atm.cm3/s |
| Panel leakage | **NA** | |

## OTHERS CHARACTERISTICS

Assembly instruction **NA**

Others :
* Coaxial Transmission Line Only

## MECHANICAL CHARACTERISTICS

| | | |
|---|---|---|
| Center contact retention | | |
| Axial force – Mating end | **27** | N mini |
| Axial force – Opposite end | **27** | N mini |
| Torque | **2.8** | N.cm mini |
| Recommended torque | | |
| Mating | **100** | N.cm |
| Panel nut | **NA** | N.cm |
| Mating life | **500** | Cycles mini |
| Weight | **3.940** | g |

**Issue :** 0147 F

In the effort to improve our products, we reserve the right to make changes judged to be necessary.

RADIALL®