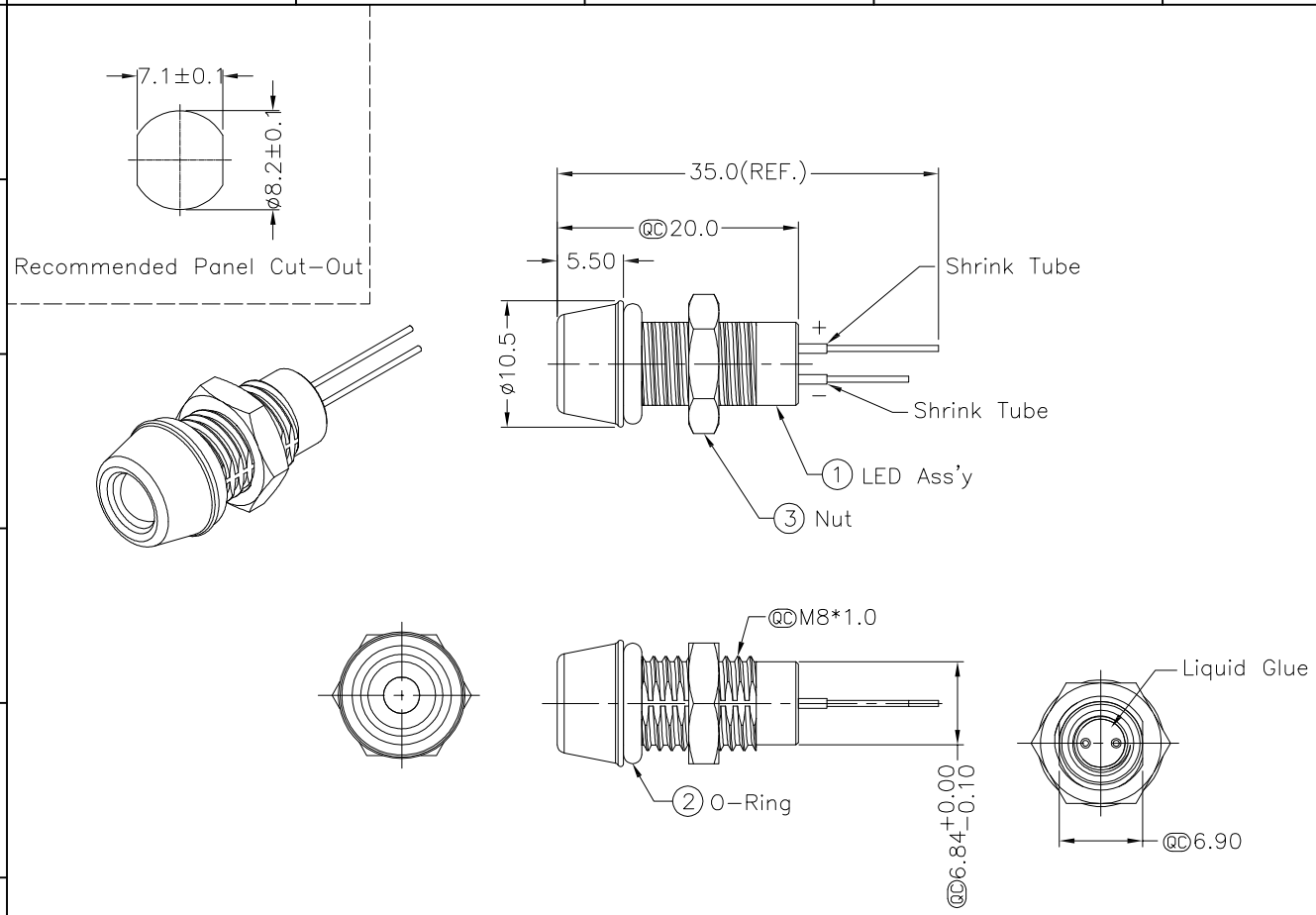

Notes:

QC Important Dimension To Check
Waterproof Rate: IP67
LED Holder:Brass, Nickel Plating
LED: ø3 mm,White
Gasket:EPDM,Black
Screw Nut:Brass, Nickel Plating
Operating Voltage: DC 4V
Operating Temperature:−40~+80°C
For Panel Thickness 6.5mm Max.

RoHS compliant

Scale	Free
TOLERANCE	
.X	±0.25
.XX	±0.10
.XXX	±0.05
Angle	±1°

Id.	Modification	Date	Name
0	Drawn	11.03.2014	Winnie

	Date	Name
Drawn	11.03.2014	Winnie
Approved	11.03.2014	Winnie

ASSMANN WSW components

Customer-No.

ASSMANN WSW-No.
A-LED8-1RBAS-MR7-1

Drawing-No.
ASS 6233 CO

rev00

Replace

Sheet