Dimensions: [mm]

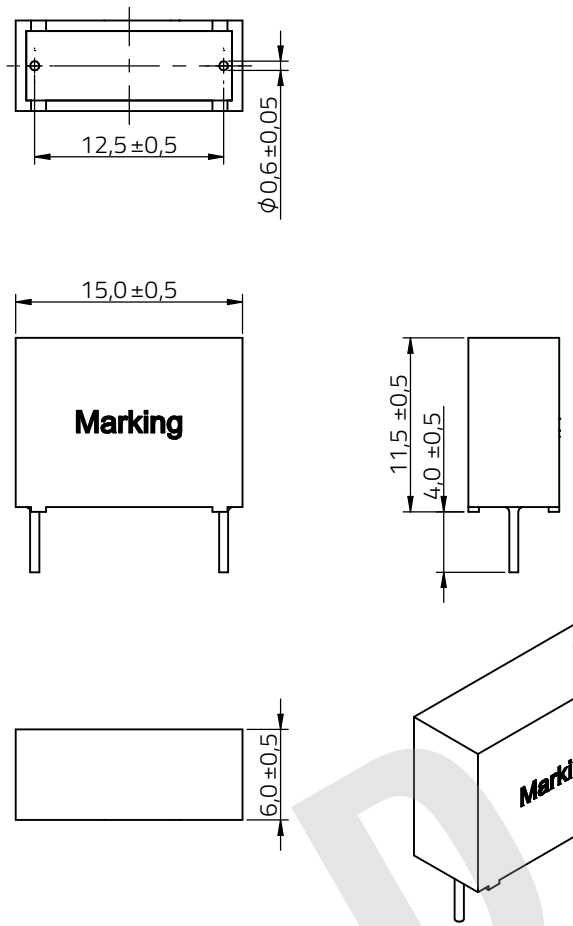

Scale - 2:1

Recommended Hole Pattern: [mm]

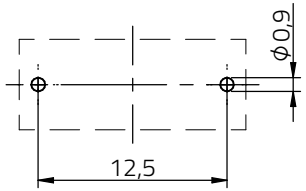

Scale - 2:1

Schematic:

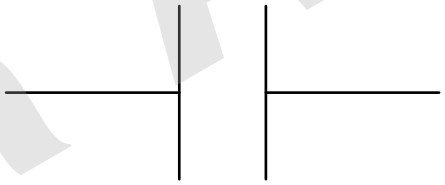

Electrical Properties:

Properties		Test conditions	Value	Unit	Tol.
Capacitance	C	1 V/ 1 kHz ± 0.2 kHz	150	nF	±10%
Rated Voltage	V_R		275	V (AC)	max.
Rated Voltage	V_R	up to 85 °C	630	V (DC)	max.
Rated Voltage	V_R	up to 105 °C	560	V (DC)	max.
Insulation Resistance	R_{ISO}	1 min @ 100 V (DC)	30	GΩ	min.
Dissipation Factor	DF	@ 1 kHz	0.1	%	max.
Dissipation Factor	DF	@ 10 kHz	0.3	%	max.
Dissipation Factor	DF	@ 100 kHz	3	%	max.
Rate of Voltage Rise	dV/dt		210	V/µs	max.
Dielectric Strength Pin to Pin		1 min./ +20 °C	1333	V (DC)	max.
Dielectric Strength Pin to Case		1 min./ +20 °C	2000	V (AC)	max.

General Information:

X2-Safety Class Capacitor; MKP - Metallized Polypropylene		
Operating Temperature	-40 up to +105 °C	
Storage Conditions (in original packaging)	5 °C up to + 35 °C; 10 % up to 75 % RH	
Maximum Selfheating (Rated)	7	°C
Moisture Sensitivity Level (MSL)	1	
Test conditions of electrical properties: +20 °C, 35 % RH if not specified differently		
FIT according to separate documentation		
Only designed to be used in parallel to the mains, not approved for series applications.		

DRAFT

RoHS COMPLIANT REACh COMPLIANT

WÜRTH ELEKTRONIK MORE THAN YOU EXPECT

Würth Elektronik eiSos GmbH & Co. KG
EMC & Inductive Solutions
Max-Eyth-Str. 1
74638 Waldenburg
Germany
Tel. +49 (0) 79 42 945 - 0
www.we-online.com
eiSos@we-online.com

CHECKED	REVISION	DATE (YYYY-MM-DD)	GENERAL TOLERANCE	PROJECTION METHOD
FPu	002.001	2030-01-01	DIN ISO 2768-1m	

DESCRIPTION
WCAP-FTX2 Film Capacitors

TECHNICAL REFERENCE
MX2P125154K275ACPP55004

ORDER CODE
890324024001CS

SIZE/TYPE	BUSINESS UNIT	STATUS	PAGE
Pitch 12.5 mm	eiCap	Valid	1/9

This electronic component has been designed and developed for usage in general electronic equipment only. This product is not authorized for use in equipment where a higher safety standard and reliability standard is especially required or where a failure of the product is reasonably expected to cause severe personal injury or death, unless the parties have executed an agreement specifically governing such use. Moreover Würth Elektronik eiSos GmbH & Co KG products are neither designed nor intended for use in areas such as military, aerospace, aviation, nuclear control, submarine, transportation (automotive control, train control, ship control), transportation signal, disaster prevention, medical, public information network etc.. Würth Elektronik eiSos GmbH & Co KG must be informed about the intent of such usage before the design-in stage. In addition, sufficient reliability evaluation checks for safety must be performed on every electronic component which is used in electrical circuits that require high safety and reliability functions or performance.

Product Marking:

1st Line right	Matchcode: FTX2
2nd Line right	Safety Class & Rated Voltage: X2, 275 V ~
3rd Line right	Climate Category: 40/ 105/ 56/ B
2nd Line left	Capacitance & Tolerance Code: 154K (Basis pF)
Bottom Line	Certificates & Datecode: ENEC, Datecode (YWW), cULUS, CQC & Internal Marking

Mechanical Properties:

Properties	Test Conditions		Lead Diameter [mm]	Force [N]	condition
Termination Robustness	IEC 60068 - 2 - 21	Pull Test	0.5 to ≤ 0.8	10	min. 10 sec.
			0.9 to ≤ 1.25	20	min. 10 sec.
		Bend Test	0.5 to ≤ 0.8	5	min. 2 cycles
			0.9 to ≤ 1.25	10	min. 2 cycles

Test items and standards:

Properties	Standard	
Active Flammability	IEC 60384 - 14	20 surge pulses @ 2.5 kV (one pulse every 5 seconds)
Passive Flammability	IEC 60384 - 14	in combination with IEC 60384 - 1 & IEC 60695 - 11 - 5
Vibration	IEC 60068 - 2 - 6	all 3 directions, 2 hours each @ 10 - 55 - 10 Hz, amplitude 0.75 mm or 10 g
Damp Heat	IEC 60068 - 2 - 78	40 °C, 95 % RH, 56 days
Temperature Cycles	IEC 60068 - 2 - 14	5 cycles, upper and lower temperature 30 minutes each, 3 minutes Max transfer time
Charge/ Discharge Test	IEC 60384 - 14	√2 x UR @ 100 V/ µs
Surge Test	IEC 60384 - 14	2.5 kV Surge impulses
Endurance Test	IEC 60384 - 14	1.25 x 275 V (AC) through a 47 Ω ± 5 % Resistor, once every hour increase to 1000 V (AC) for 0.1 seconds, 1000 hours @ 105 °C ± 3 °C

Certification:

RoHS Approval	Compliant [2011/65/EU&2015/863]
REACh Approval	Conform or declared [(EC)1907/2006]
ENEC 10 Approval	40038405 [IEC 60384-14]
cULus Approval	E345659 [UL 60384-14&CSA E60384-1&CSA E60384-14]
CQC Approval	13001104051 [IEC 60384-14]

DRAFT

WÜRTH ELEKTRONIK
MORE THAN YOU EXPECT

Würth Elektronik eiSos GmbH & Co. KG
EMC & Inductive Solutions
Max-Eyth-Str. 1
74638 Waldenburg
Germany
Tel. +49 (0) 79 42 945 - 0
www.we-online.com
eiSos@we-online.com

CHECKED	REVISION	DATE (YYYY-MM-DD)	GENERAL TOLERANCE	PROJECTION METHOD
FPu	002.001	2030-01-01	DIN ISO 2768-1m	

DESCRIPTION
WCAP-FTX2 Film Capacitors

TECHNICAL REFERENCE
MX2P125154K275ACPP55004

ORDER CODE
890324024001CS

SIZE/TYPE	BUSINESS UNIT	STATUS	PAGE
Pitch 12.5 mm	eiCap	Valid	2/9

This electronic component has been designed and developed for usage in general electronic equipment only. This product is not authorized for use in equipment where a higher safety standard and reliability standard is especially required or where a failure of the product is reasonably expected to cause severe personal injury or death, unless the parties have executed an agreement specifically governing such use. Moreover Würth Elektronik eiSos GmbH & Co KG products are neither designed nor intended for use in areas such as military, aerospace, aviation, nuclear control, submarine, transportation (automotive control, train control, ship control), transportation signal, disaster prevention, medical, public information network etc.. Würth Elektronik eiSos GmbH & Co KG must be informed about the intent of such usage before the design-in stage. In addition, sufficient reliability evaluation checks for safety must be performed on every electronic component which is used in electrical circuits that require high safety and reliability functions or performance.

Dissipation Factor vs. Temperature:

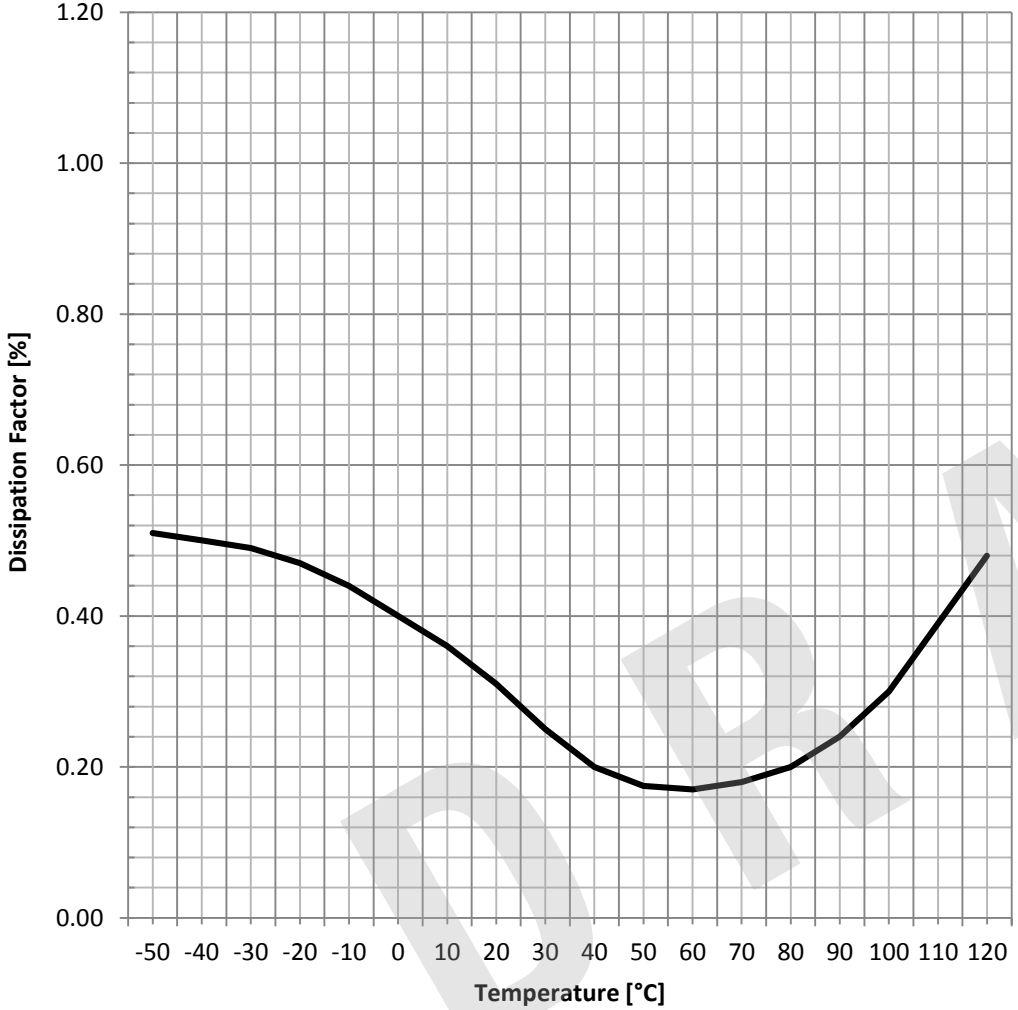

Test Equipment: E4991A or equivalent

Dissipation Factor vs. Frequency:

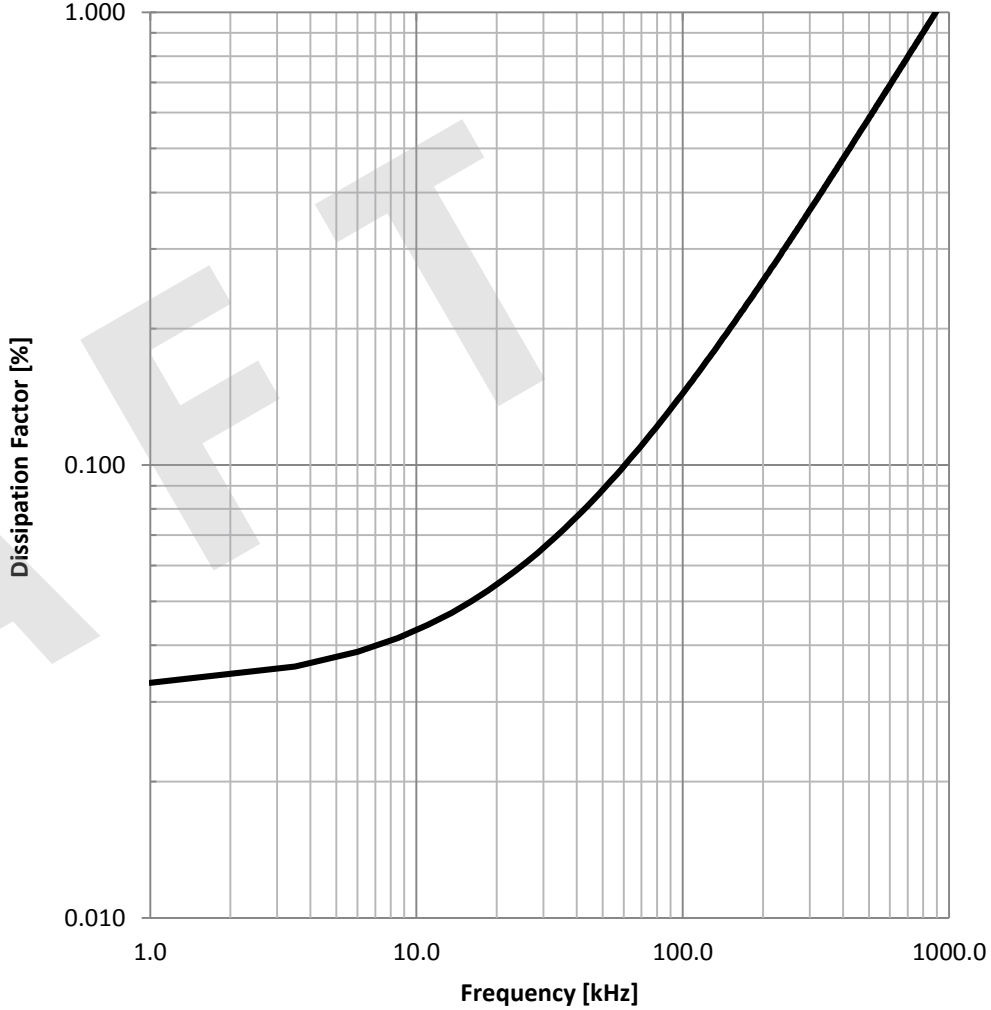

Test Equipment: E4991A or equivalent

DRAFT

RoHS COMPLIANT REACh COMPLIANT

WÜRTH ELEKTRONIK MORE THAN YOU EXPECT

Würth Elektronik eiSos GmbH & Co. KG
EMC & Inductive Solutions
Max-Eyth-Str. 1
74638 Waldenburg
Germany
Tel. +49 (0) 79 42 945 - 0
www.we-online.com
eiSos@we-online.com

CHECKED	REVISION	DATE (YYYY-MM-DD)	GENERAL TOLERANCE	PROJECTION METHOD
FPu	002.001	2030-01-01	DIN ISO 2768-1m	

DESCRIPTION
WCAP-FTX2 Film Capacitors

TECHNICAL REFERENCE
MX2P125154K275ACPP55004

ORDER CODE
890324024001CS

SIZE/TYPE	BUSINESS UNIT	STATUS	PAGE
Pitch 12.5 mm	eiCap	Valid	3/9

This electronic component has been designed and developed for usage in general electronic equipment only. This product is not authorized for use in equipment where a higher safety standard and reliability standard is especially required or where a failure of the product is reasonably expected to cause severe personal injury or death, unless the parties have executed an agreement specifically governing such use. Moreover Würth Elektronik eiSos GmbH & Co KG products are neither designed nor intended for use in areas such as military, aerospace, aviation, nuclear control, submarine, transportation (automotive control, train control, ship control), transportation signal, disaster prevention, medical, public information network etc.. Würth Elektronik eiSos GmbH & Co KG must be informed about the intent of such usage before the design-in stage. In addition, sufficient reliability evaluation checks for safety must be performed on every electronic component which is used in electrical circuits that require high safety and reliability functions or performance.

Capacitance Change vs. Frequency:

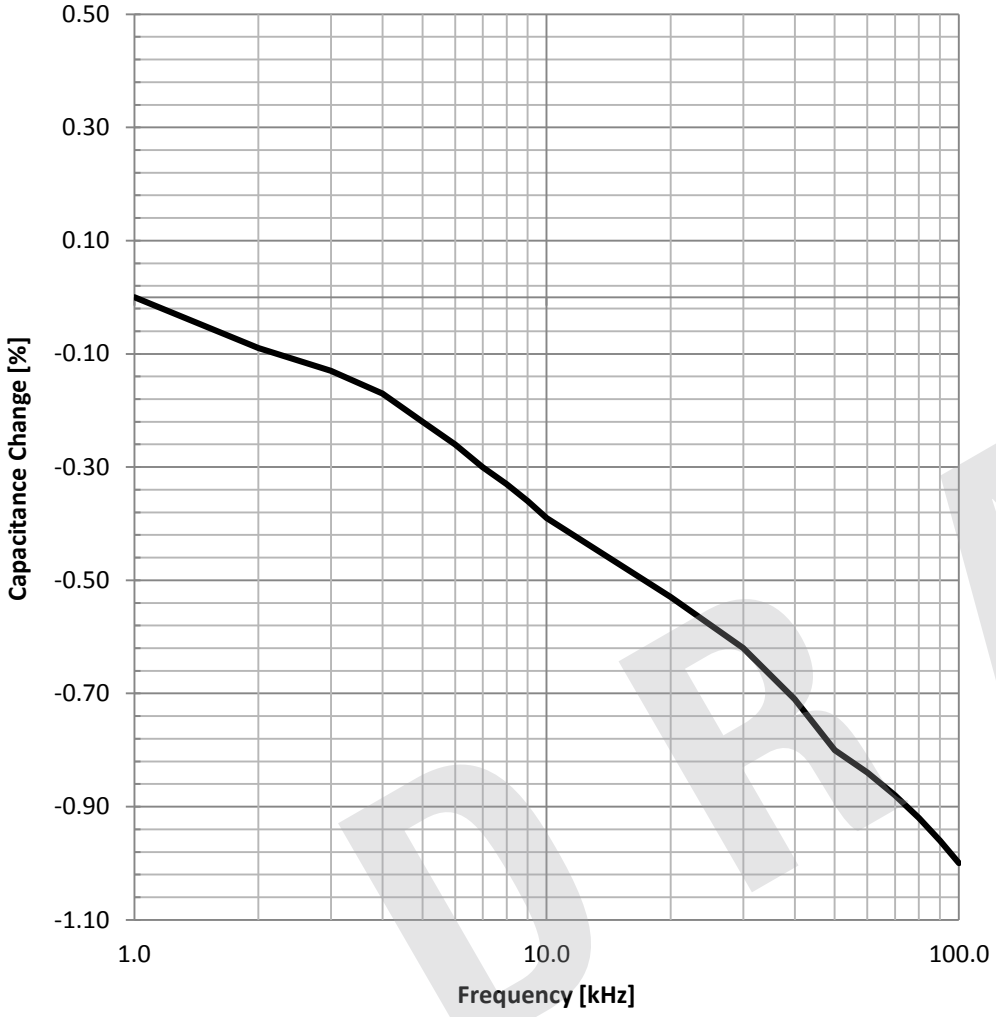

Test Equipment: E4991A or equivalent

Capacitance Change vs. Temperature:

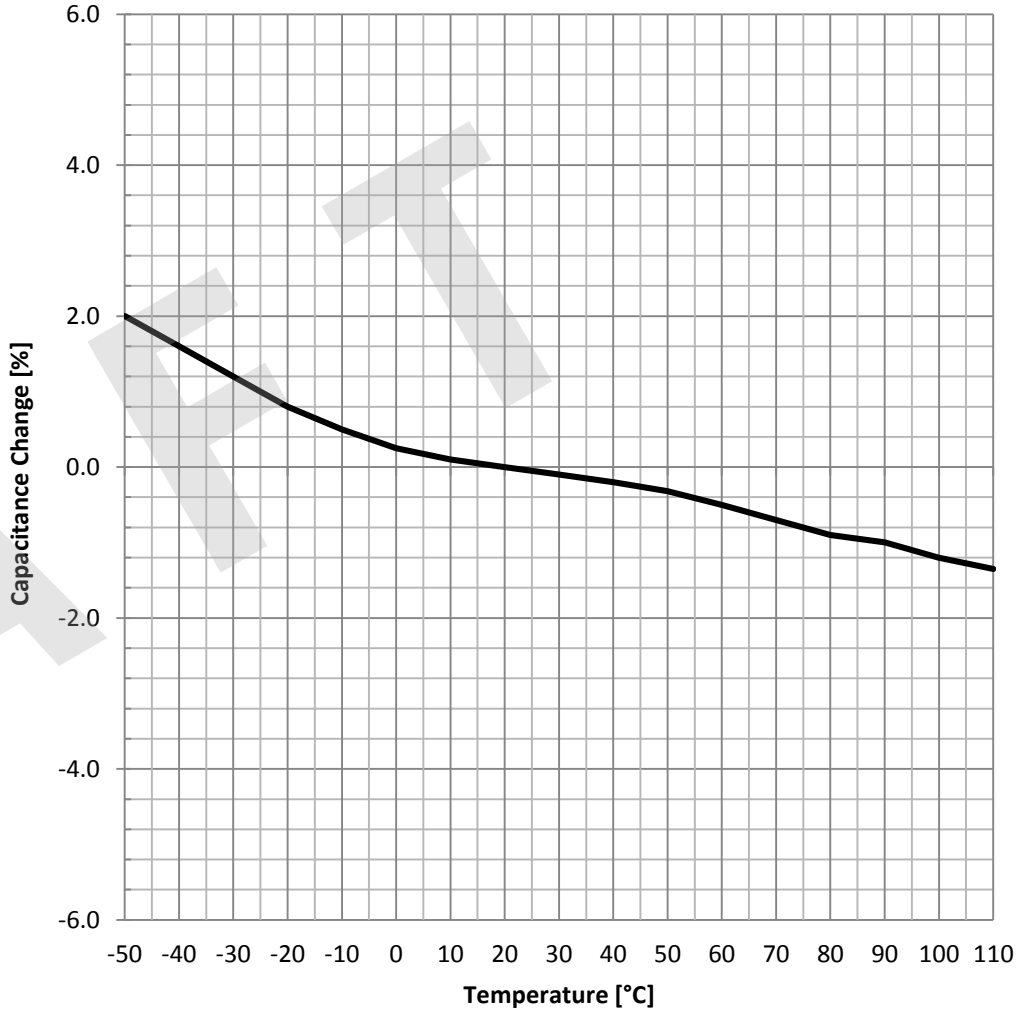

Test Equipment: E4991A or equivalent

DRAFT

CHECKED	REVISION	DATE (YYYY-MM-DD)	GENERAL TOLERANCE	PROJECTION METHOD
FPu	002.001	2030-01-01	DIN ISO 2768-1m	

DESCRIPTION
WCAP-FTX2 Film Capacitors

TECHNICAL REFERENCE
MX2P125154K275ACPP55004

ORDER CODE
890324024001CS

SIZE/TYPE	BUSINESS UNIT	STATUS	PAGE
Pitch 12.5 mm	eiCap	Valid	4/9

WÜRTH ELEKTRONIK
MORE THAN YOU EXPECT

Würth Elektronik eiSos GmbH & Co. KG
EMC & Inductive Solutions
Max-Eyth-Str. 1
74638 Waldenburg
Germany
Tel. +49 (0) 79 42 945 - 0
www.we-online.com
eiSos@we-online.com

This electronic component has been designed and developed for usage in general electronic equipment only. This product is not authorized for use in equipment where a higher safety standard and reliability standard is especially required or where a failure of the product is reasonably expected to cause severe personal injury or death, unless the parties have executed an agreement specifically governing such use. Moreover Würth Elektronik eiSos GmbH & Co KG products are neither designed nor intended for use in areas such as military, aerospace, aviation, nuclear control, submarine, transportation (automotive control, train control, ship control), transportation signal, disaster prevention, medical, public information network etc.. Würth Elektronik eiSos GmbH & Co KG must be informed about the intent of such usage before the design-in stage. In addition, sufficient reliability evaluation checks for safety must be performed on every electronic component which is used in electrical circuits that require high safety and reliability functions or performance.

Packaging Specification - Inner Carton: [mm]

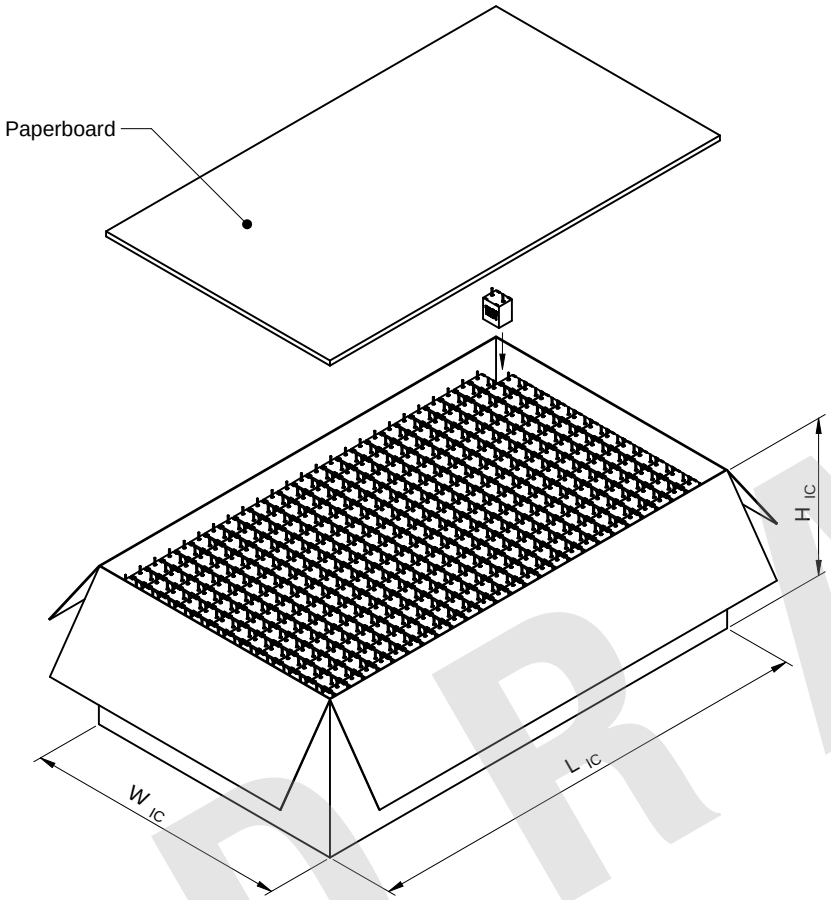

L_{IC} (mm)	W_{IC} (mm)	H_{IC} (mm)	No. of Paperboard	No. of Layer	Packaging Unit	Material
typ.	typ.	typ.	pcs.	pcs.	pcs.	
275,00	160,00	95,00	6	5	2150	Paper

Packaging Specification - Outer Carton: [mm]

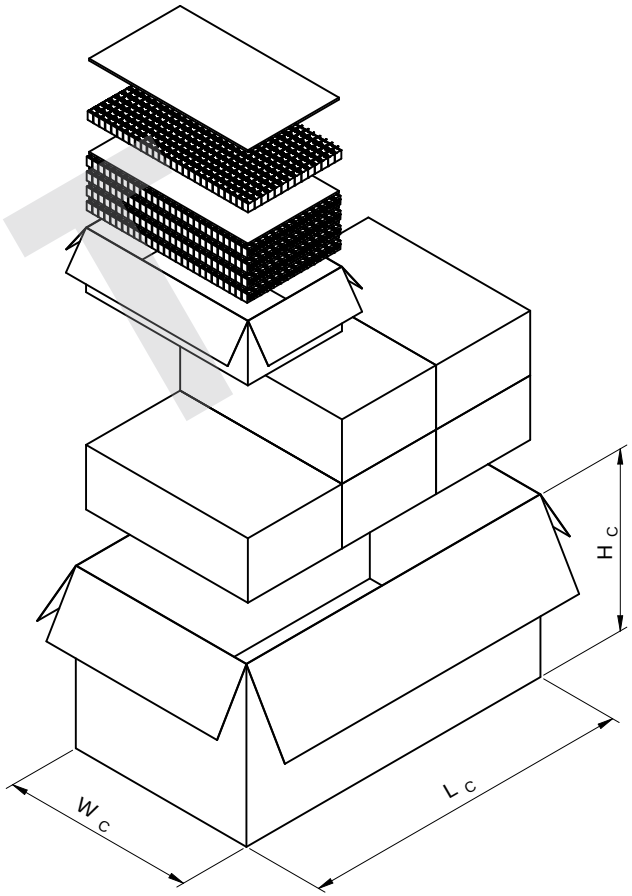

L_C (mm)	W_C (mm)	H_C (mm)	No. of inner Carton	Packaging Unit	Material
typ.	typ.	typ.	pcs.	pcs.	
500,00	290,00	240,00	6	12900	Paper

DRAFT

RoHS COMPLIANT · REACh COMPLIANT

WÜRTH ELEKTRONIK
MORE THAN YOU EXPECT

Würth Elektronik eiSos GmbH & Co. KG
EMC & Inductive Solutions
Max-Eyth-Str. 1
74638 Waldenburg
Germany
Tel. +49 (0) 79 42 945 - 0
www.we-online.com
eiSos@we-online.com

CHECKED	REVISION	DATE (YYYY-MM-DD)	GENERAL TOLERANCE	PROJECTION METHOD
FPu	002.001	2030-01-01	DIN ISO 2768-1m	

DESCRIPTION
WCAP-FTX2 Film Capacitors

TECHNICAL REFERENCE
MX2P125154K275ACPP55004

ORDER CODE
890324024001CS

SIZE/TYPE	BUSINESS UNIT	STATUS	PAGE
Pitch 12.5 mm	eiCap	Valid	5/9

This electronic component has been designed and developed for usage in general electronic equipment only. This product is not authorized for use in equipment where a higher safety standard and reliability standard is especially required or where a failure of the product is reasonably expected to cause severe personal injury or death, unless the parties have executed an agreement specifically governing such use. Moreover Würth Elektronik eiSos GmbH & Co KG products are neither designed nor intended for use in areas such as military, aerospace, aviation, nuclear control, submarine, transportation (automotive control, train control, ship control), transportation signal, disaster prevention, medical, public information network etc.. Würth Elektronik eiSos GmbH & Co KG must be informed about the intent of such usage before the design-in stage. In addition, sufficient reliability evaluation checks for safety must be performed on every electronic component which is used in electrical circuits that require high safety and reliability functions or performance.

Classification Wave Soldering Profile:

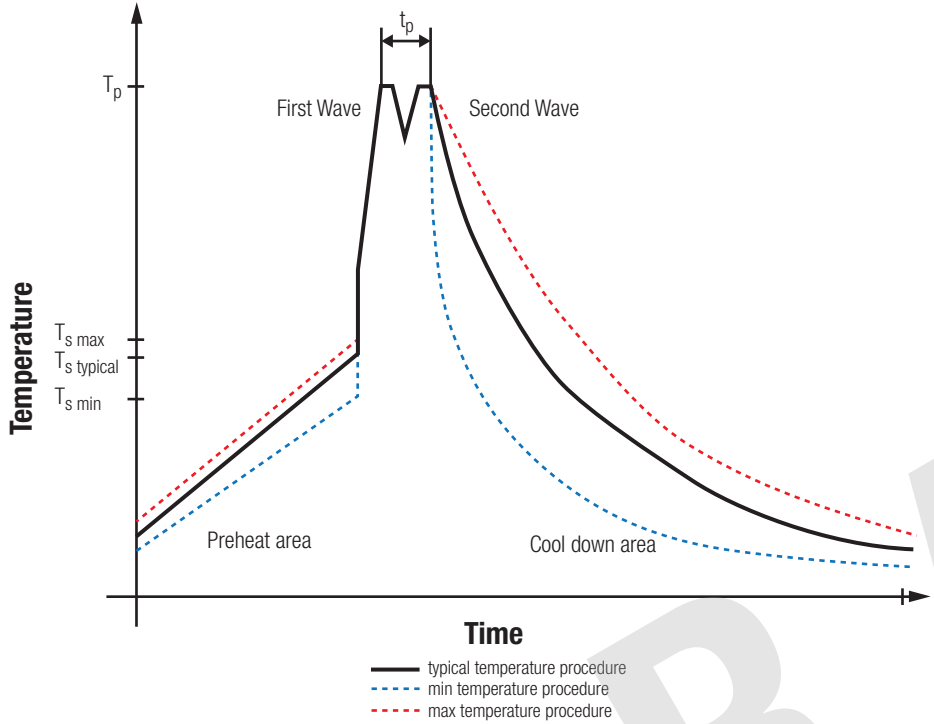

Classification Wave Soldering Profile:

Profile Feature		Pb-Free Assembly	Sn-Pb Assembly
Preheat Temperature Min	$T_{s\ min}$	100 °C	100 °C
Preheat Temperature Typical	$T_{s\ typical}$	120 °C	120 °C
Preheat Temperature Max	$T_{s\ max}$	130 °C	130 °C
Preheat Time t_s from $T_{s\ min}$ to $T_{s\ max}$	t_s	70 seconds	70 seconds
Ramp-up Rate	Δ T	150 °C max.	150 °C max.
Peak Temperature	T_p	250 °C - 260 °C	235 °C - 260 °C
Time of actual peak temperature	t_p	max. 10 seconds max. 5 seconds each wave	max. 10 seconds max. 5 seconds each wave
Ramp-down Rate, Min		~ 2 K/ second	~ 2 K/ second
Ramp-down Rate, Typical		~ 3.5 K/ second	~ 3.5 K/ second
Ramp-down Rate, Max		~ 5 K/ second	~ 5 K/ second
Time 25 °C to 25 °C		4 minutes	4 minutes

refer to EN61760-1:2006

DRAFT

WÜRTH ELEKTRONIK
MORE THAN YOU EXPECT

Würth Elektronik eiSos GmbH & Co. KG
EMC & Inductive Solutions
Max-Eyth-Str. 1
74638 Waldenburg
Germany
Tel. +49 (0) 79 42 945 - 0
www.we-online.com
eiSos@we-online.com

CHECKED	REVISION	DATE (YYYY-MM-DD)	GENERAL TOLERANCE	PROJECTION METHOD
FPu	002.001	2030-01-01	DIN ISO 2768-1m	

DESCRIPTION
WCAP-FTX2 Film Capacitors

TECHNICAL REFERENCE
MX2P125154K275ACPP55004

ORDER CODE
890324024001CS

SIZE/TYPE	BUSINESS UNIT	STATUS	PAGE
Pitch 12.5 mm	eiCap	Valid	6/9

This electronic component has been designed and developed for usage in general electronic equipment only. This product is not authorized for use in equipment where a higher safety standard and reliability standard is especially required or where a failure of the product is reasonably expected to cause severe personal injury or death, unless the parties have executed an agreement specifically governing such use. Moreover Würth Elektronik eiSos GmbH & Co KG products are neither designed nor intended for use in areas such as military, aerospace, aviation, nuclear control, submarine, transportation (automotive control, train control, ship control), transportation signal, disaster prevention, medical, public information network etc.. Würth Elektronik eiSos GmbH & Co KG must be informed about the intent of such usage before the design-in stage. In addition, sufficient reliability evaluation checks for safety must be performed on every electronic component which is used in electrical circuits that require high safety and reliability functions or performance.

Cautions and Warnings:

The following conditions apply to all goods within the product series of Film Capacitors of Würth Elektronik eiSos GmbH & Co. KG:

General:

- This electronic component is designed and manufactured for use in general electronic equipment.
- Würth Elektronik must be asked for a written approval (following the certain PPAP level procedure) before incorporating the components into any equipment in the field such as military, aerospace, aviation, nuclear control, submarine, transportation (automotive control, train control, ship control), transportation signal, disaster prevention, medical, public information network etc. where higher safety and reliability are especially required and/or if there is the possibility of direct damage or human injury.
- Electronic components that will be used in safety-critical or high-reliability applications, should be pre-evaluated by the customer.
- Direct mechanical impact to the product shall be prevented as material of the body, pins or termination could flake or in the worst case it could break.
- Avoid any water or heavy dust on capacitors surface, which may cause electrical leakage, damage, overheating or corrosion.
- Würth Elektronik products are qualified according to international standards, which are listed in each product reliability report. Würth Elektronik does not warrant any customer qualified product characteristic, beyond Würth Elektronik specifications, for its validity and sustainability over time.
- The customer is responsible for the functionality of his or her own products. All technical specifications for standard products also apply to customer specific products.
- The component is designed and manufactured to be used within the datasheet specified values. If the usage and operation conditions specified in the datasheet are not met, the body, pins or termination may be damaged or dissolved.
- Do not apply any kind of flexural or compressive force onto soldered or unsoldered component.
- The capacitance tolerance as specified within the datasheet is only valid on the date of delivery and according specified measurement criteria.

Product specific

Storage conditions

- A storage of Würth Elektronik products for longer than 12 months is not recommended. Within other effects, the terminals may suffer degradation, resulting in bad solderability. Therefore, all products shall be used within the period of 12 months based on the day of shipment.
- Do not expose the components into direct sunlight.
- The storage condition in the original packaging is defined according to DIN EN 61760-2.
- The environment in which the capacitors are operated and stored has to have atmospheric characteristics and must be free of dew condensation and toxic gases (e.g. chlorine, ammonia, sulfur, hydrogen sulphide and hydrogen sulfate).
- Do not expose the capacitor to environments with hazardous gas, ozone, ultraviolet rays or any kind of radiation. Avoid any contact of the capacitor with direct sunshine, saltwater, spray of water or types of oil during storage.
- The storage conditions stated in the original packaging apply to the storage time and not to the transportation time of the components.

Operating climatic conditions

- Do not exceed the lower nor the upper specified temperature under no circumstances.
- Do not use the capacitors under high humidity, high temperature or under high or low atmospheric pressure which may affect capacitors reliability.
- Surface temperature including self-heating must be kept below the maximum operating temperature.

Operating load conditions

- Due to self-heating the reliability of the capacitor may be reduced, if high frequency AC or pulse is applied.
- Consider carefully possible specific changes of electrical characteristics like capacitance over temperature, voltage and time as well as the specific performance over frequency for the actual use conditions.
- Avoid any overvoltage and do not apply a continuous overvoltage. If an overvoltage is applied to the capacitor, the leakage current can increase drastically. The applied working voltage is not allowed to exceed the rated working voltage of the specific capacitor.
- If film capacitors with safety approvals are operated with a DC voltage exceeding the specified AC voltage, the approvals given on the basis of IEC 60384-14 are no longer valid.

Packaging:

- The packaging specifications apply only to purchase orders comprising whole packaging units. If the ordered quantity exceeds or is lower than the specified packaging unit, packaging in accordance with the packaging specifications cannot be ensured.

Soldering

- The solder profile must comply with the Würth Elektronik technical soldering specification. All other profiles will void the warranty.
- All other soldering methods are at the customer's own risk.
- Strong forces which may affect the coplanarity of the component's electrical connection with the PCB (i.e. pins), can damage the part, resulting in void of the warranty.
- Customer needs to ensure that the applied solder paste, the paste thickness and solder conditions are enough to guarantee a sufficient solder result according to the relevant criteria of IPC-A-610.
- Excessive amount of solder may lead to higher tensile force and chip cracking. Insufficient amount of solder may detach the capacitor due to defective contacts.
- Do not use excessive nor insufficient flux.

Cleaning

- Do not use any other cleaning solvents for box-typed capacitors except: ethanol, isopropanol, n-propanol - water mixtures. After cleaning a drying process with temperatures not exceeding 65°C and not longer than 4 hours is mandatory to prevent any kind of electrical damage.

DRAFT

This electronic component has been designed and developed for usage in general electronic equipment only. This product is not authorized for use in equipment where a higher safety standard and reliability standard is especially required or where a failure of the product is reasonably expected to cause severe personal injury or death, unless the parties have executed an agreement specifically governing such use. Moreover Würth Elektronik eiSos GmbH & Co KG products are neither designed nor intended for use in areas such as military, aerospace, aviation, nuclear control, submarine, transportation (automotive control, train control, ship control), transportation signal, disaster prevention, medical, public information network etc.. Würth Elektronik eiSos GmbH & Co KG must be informed about the intent of such usage before the design-in stage. In addition, sufficient reliability evaluation checks for safety must be performed on every electronic component which is used in electrical circuits that require high safety and reliability functions or performance.

Coating, molding and potting of the PCB

- If the product is potted in the costumer's application, the potting material might shrink or expand during and after hardening. Shrinking could lead to an incomplete seal, allowing contaminants into the body and termination. Expansion could damage the body or termination. We recommend a manual inspection after potting to avoid these effects.
- If final assemblies will be placed completely in any plastic resin, physical, chemical and thermal influences must be considered.
- When coating and molding the PCB, verify the quality influence on the capacitor.
- Verify the curing temperature and assure that there is no harmful decomposing or reaction gas emission during curing.
- Do not exceed the specified max. self-heating.

Vibration resistance

- Do not exceed the vibration limits given by IEC60068-2-6.

Handling

- After soldering, please pay attention not to bend, twist or distort the PCB in handling and storage.
- Avoid excessive pressure during the functional check of the PCB.
- Avoid bending stress while breaking the PCB.
- WCAP-FTXX and WCAP-FTX2 capacitors are not designed and not recommended to be used in series connection to the mains.
- The temperature rise of the component must be taken into consideration. The operating temperature is comprised of ambient temperature and temperature rise of the component.The operating temperature of the component shall not exceed the maximum temperature specified.

Flammability

- Avoid any external energy or open fire (passive flammability).

These cautions and warnings comply with the state of the scientific and technical knowledge and are believed to be accurate and reliable.
However, no responsibility is assumed for inaccuracies or incompleteness.(V2.1)

DRAFT

WÜRTH ELEKTRONIK MORE THAN YOU EXPECT

Würth Elektronik eiSos GmbH & Co. KG
EMC & Inductive Solutions
Max-Eyth-Str. 1
74638 Waldenburg
Germany
Tel. +49 (0) 79 42 945 - 0
www.we-online.com
eiSos@we-online.com

CHECKED	REVISION	DATE (YYYY-MM-DD)	GENERAL TOLERANCE	PROJECTION METHOD
FPu	002.001	2030-01-01	DIN ISO 2768-1m	

DESCRIPTION
WCAP-FTX2 Film Capacitors

TECHNICAL REFERENCE
MX2P125154K275ACPP55004

ORDER CODE
890324024001CS

SIZE/TYPE	BUSINESS UNIT	STATUS	PAGE
Pitch 12.5 mm	eiCap	Valid	8/9

This electronic component has been designed and developed for usage in general electronic equipment only. This product is not authorized for use in equipment where a higher safety standard and reliability standard is especially required or where a failure of the product is reasonably expected to cause severe personal injury or death, unless the parties have executed an agreement specifically governing such use. Moreover Würth Elektronik eiSos GmbH & Co KG products are neither designed nor intended for use in areas such as military, aerospace, aviation, nuclear control, submarine, transportation (automotive control, train control, ship control), transportation signal, disaster prevention, medical, public information network etc.. Würth Elektronik eiSos GmbH & Co KG must be informed about the intent of such usage before the design-in stage. In addition, sufficient reliability evaluation checks for safety must be performed on every electronic component which is used in electrical circuits that require high safety and reliability functions or performance.

Important Notes

The following conditions apply to all goods within the product range of Würth Elektronik eiSos GmbH & Co. KG:

1. General Customer Responsibility

Some goods within the product range of Würth Elektronik eiSos GmbH & Co. KG contain statements regarding general suitability for certain application areas. These statements about suitability are based on our knowledge and experience of typical requirements concerning the areas, serve as general guidance and cannot be estimated as binding statements about the suitability for a customer application. The responsibility for the applicability and use in a particular customer design is always solely within the authority of the customer. Due to this fact it is up to the customer to evaluate, where appropriate to investigate and decide whether the device with the specific product characteristics described in the product specification is valid and suitable for the respective customer application or not.

2. Customer Responsibility related to Specific, in particular Safety-Relevant Applications

It has to be clearly pointed out that the possibility of a malfunction of electronic components or failure before the end of the usual lifetime cannot be completely eliminated in the current state of the art, even if the products are operated within the range of the specifications.
In certain customer applications requiring a very high level of safety and especially in customer applications in which the malfunction or failure of an electronic component could endanger human life or health it must be ensured by most advanced technological aid of suitable design of the customer application that no injury or damage is caused to third parties in the event of malfunction or failure of an electronic component. Therefore, customer is cautioned to verify that data sheets are current before placing orders. The current data sheets can be downloaded at www.we-online.com.

3. Best Care and Attention

Any product-specific notes, cautions and warnings must be strictly observed. Any disregard will result in the loss of warranty.

4. Customer Support for Product Specifications

Some products within the product range may contain substances which are subject to restrictions in certain jurisdictions in order to serve specific technical requirements. Necessary information is available on request. In this case the field sales engineer or the internal sales person in charge should be contacted who will be happy to support in this matter.

5. Product R&D

Due to constant product improvement product specifications may change from time to time. As a standard reporting procedure of the Product Change Notification (PCN) according to the JEDEC-Standard inform about minor and major changes. In case of further queries regarding the PCN, the field sales engineer or the internal sales person in charge should be contacted. The basic responsibility of the customer as per Section 1 and 2 remains unaffected.

6. Product Life Cycle

Due to technical progress and economical evaluation we also reserve the right to discontinue production and delivery of products. As a standard reporting procedure of the Product Termination Notification (PTN) according to the JEDEC-Standard we will inform at an early stage about inevitable product discontinuance. According to this we cannot guarantee that all products within our product range will always be available. Therefore it needs to be verified with the field sales engineer or the internal sales person in charge about the current product availability expectancy before or when the product for application design-in disposal is considered. The approach named above does not apply in the case of individual agreements deviating from the foregoing for customer-specific products.

7. Property Rights

All the rights for contractual products produced by Würth Elektronik eiSos GmbH & Co. KG on the basis of ideas, development contracts as well as models or templates that are subject to copyright, patent or commercial protection supplied to the customer will remain with Würth Elektronik eiSos GmbH & Co. KG. Würth Elektronik eiSos GmbH & Co. KG does not warrant or represent that any license, either expressed or implied, is granted under any patent right, copyright, mask work right, or other intellectual property right relating to any combination, application, or process in which Würth Elektronik eiSos GmbH & Co. KG components or services are used.

8. General Terms and Conditions

Unless otherwise agreed in individual contracts, all orders are subject to the current version of the “General Terms and Conditions of Würth Elektronik eiSos Group”, last version available at www.we-online.com.

DRAFT

WÜRTH ELEKTRONIK MORE THAN YOU EXPECT

Würth Elektronik eiSos GmbH & Co. KG
EMC & Inductive Solutions
Max-Eyth-Str. 1
74638 Waldenburg
Germany
Tel. +49 (0) 79 42 945 - 0
www.we-online.com
eiSos@we-online.com

CHECKED	REVISION	DATE (YYYY-MM-DD)	GENERAL TOLERANCE	PROJECTION METHOD
FPu	002.001	2030-01-01	DIN ISO 2768-1m	

DESCRIPTION: **WCAP-FTX2 Film Capacitors**

TECHNICAL REFERENCE: MX2P125154K275ACPP55004

ORDER CODE: **890324024001CS**

SIZE/TYPE	BUSINESS UNIT	STATUS	PAGE
Pitch 12.5 mm	eiCap	Valid	9/9

This electronic component has been designed and developed for usage in general electronic equipment only. This product is not authorized for use in equipment where a higher safety standard and reliability standard is especially required or where a failure of the product is reasonably expected to cause severe personal injury or death, unless the parties have executed an agreement specifically governing such use. Moreover Würth Elektronik eiSos GmbH & Co KG products are neither designed nor intended for use in areas such as military, aerospace, aviation, nuclear control, submarine, transportation (automotive control, train control, ship control), transportation signal, disaster prevention, medical, public information network etc.. Würth Elektronik eiSos GmbH & Co KG must be informed about the intent of such usage before the design-in stage. In addition, sufficient reliability evaluation checks for safety must be performed on every electronic component which is used in electrical circuits that require high safety and reliability functions or performance.