ABSOLUTE MAXIMUM RATINGS	
SUPPLY VOLTAGE (V_S)	+12 VDC MAX -1.2 VDC MIN
OUTPUT CURRENT	20 mA
OPERATING TEMPERATURE	-40°C TO 100°C
STORAGE TEMPERATURE	-55°C TO 150°C
MAGNETIC FLUX	NO LIMIT - THE CIRCUIT CANNOT BE DAMAGED BY MAGNETIC OVERDRIVE

ELECTRICAL CHARACTERISTICS				
	MIN	TYP	MAX	REMARKS
SUPPLY CURRENT (4)		3.5	5.0	IN MILLIAMPS PLUS LOAD CURRENT (NO EXT. RESISTORS)
OUTPUT CURRENT			10.0	MILLIAMPS
OUTPUT VOLTAGE @ 0 GAUSS (3)(4)	1.75	2.0	2.25	VOLTS DC (REF (-) SUPPLY)
SENSITIVITY MEASURED BETWEEN ±400 GAUSS (3)(4)	0.60	0.9	1.25	OUTPUT 01 MILLIVOLTS/GAUSS

GRAPH NO. 1 TYPICAL OUTPUT CHARACTERISTICS AT VARIOUS SUPPLY VOLTAGES

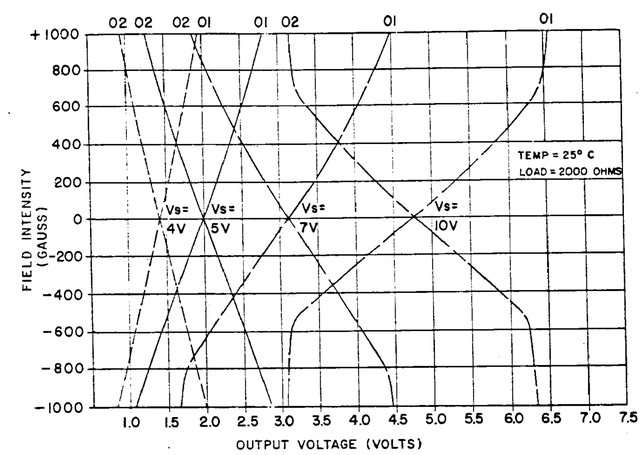

GRAPH NO. 2 TYPICAL OUTPUT CHARACTERISTICS AT VARIOUS TEMPERATURES

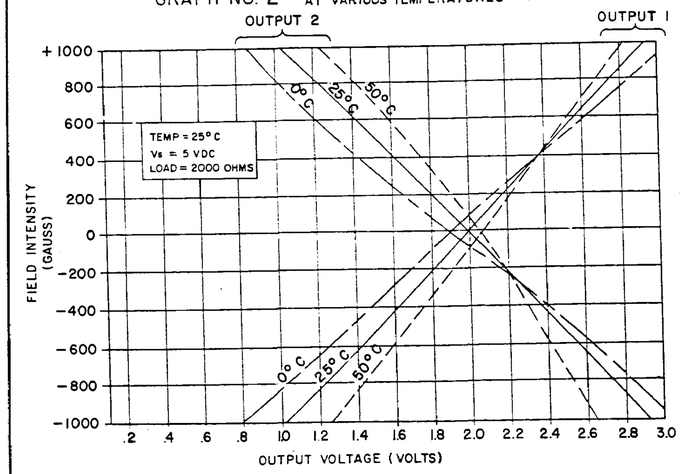

GRAPH NO. 3 TEST LIMITS

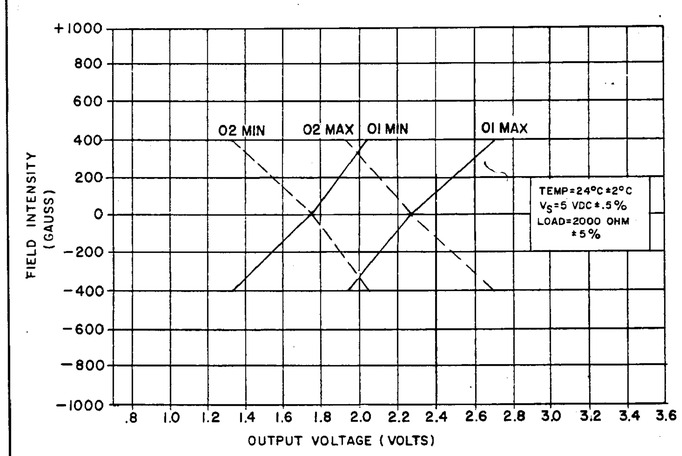

NOTES

1 - MAGNETIC DEFINITION (GAUSS)

THE MAGNETIC FIELD INTENSITY IS DEFINED AS FOLLOWS:
(+) POSITIVE GAUSS REPRESENTS THE SOUTH POLE OF THE MAGNET FACING THE SENSING AREA
(-) NEGATIVE GAUSS REPRESENTS THE NORTH POLE OF THE MAGNET FACING THE SENSING AREA
FIELD INTENSITY (GAUSS) IS CREATED BY A UNIFORM FIELD

2 - OUTPUT CHARACTERISTICS (GRAPHS)

GRAPH #1 TYPICAL OUTPUT CHARACTERISTICS AT VARIOUS SUPPLY VOLTAGES (4.0, 5.0, 7.0 AND 10.0 VDC)
GRAPH #2 TYPICAL OUTPUT CHARACTERISTICS AT VARIOUS TEMPERATURES (0°C, 24°C AND 50°C)
GRAPH #3 DEVICE TO DEVICE VARIATIONS. ALL DEVICES WILL HAVE CHARACTERISTICS THAT FALL WITHIN THE MAX AND MIN LIMITS SET ON THE GRAPH (NO EXTERNAL BIAS RESISTORS)

(3) A 2,000 ±5% OHM RESISTOR WAS USED AS A LOAD FOR ALL DATA SHOWN
(4) SUPPLY VOLTAGE AT 5 VDC ± .5%; TEMPERATURE AT 24°C±2°C
(5) ORIENTATION MARK DESIGNATES PIN 1
6 - 1K = 1000 OHMS
7 - PIN DESIGNATIONS WILL NOT BE PRINTED ON THE PACKAGE
(8) - THE LOT NUMBER AND CATALOG LISTING WILL BE STAMPED ON THE PACKAGE.
9 - SUPPLY VOLTAGE RANGE IS 4 TO 10 VDC

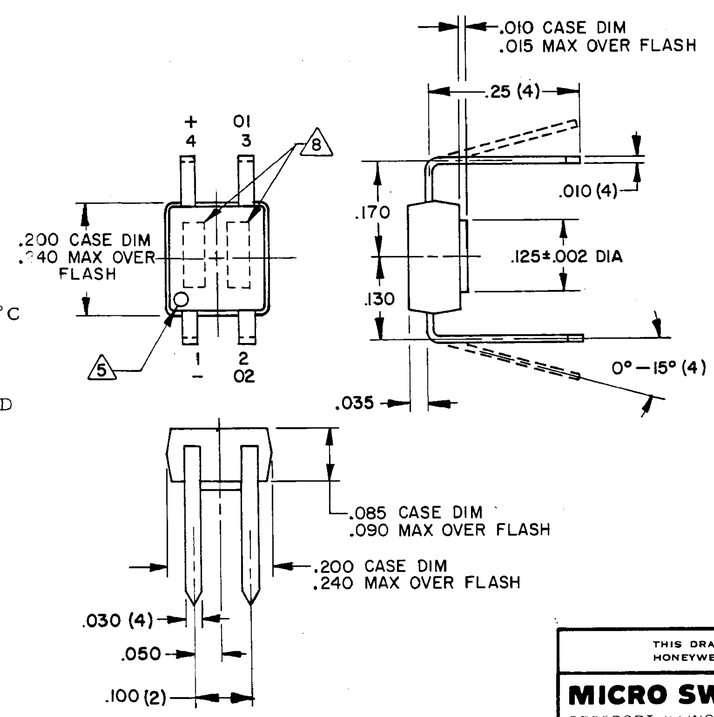

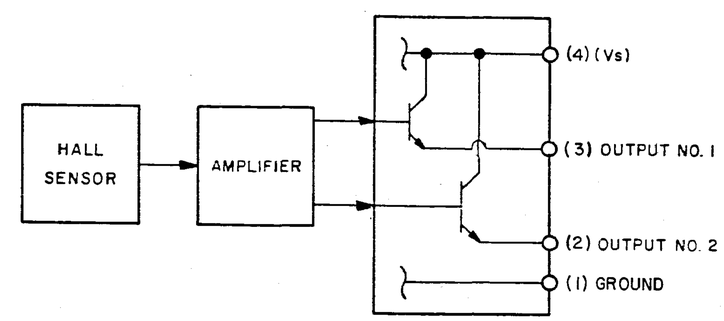

PACKAGE WITH CURRENT SOURCING OUTPUTS

THIS DRAWING COVERS A PROPRIETARY ITEM AND IS THE PROPERTY OF MICRO SWITCH, A DIVISION OF HONEYWELL. THIS DRAWING IS NOT TO BE COPIED OR USED WITHOUT THE APPROVAL OF MICRO SWITCH.

MICRO SWITCH
FREEPORT ILLINOIS U S A
A DIVISION OF HONEYWELL
FED. MFG. CODE 91929

SOLID STATE LINEAR OUTPUT MAGNETIC TRANSDUCER

CATALOG LISTING
634SS2

THIRD ANGLE PROJECTION

SCALE NONE

DO NOT SCALE PRINT

TOLERANCES
APPLY TO DESIGN UNITS. CONVERSIONS ARE ONLY FOR REFERENCE. UNLESS NOTED, TOLERANCES ARE ±

	DIM. mm	TOL. mm/in	DIM. in	TOL. mm/in
NO PLACES	X	1/.04		
ONE PLACE	X.X	0.4/.016	X.X	0.8/.03
TWO PLACES	X.XX	0.15/.006	X.XX	0.38/.015
THREE PLACES			X.XXX	0.13/.005
ANGLES				

DESIGN UNITS SI METRIC ☐ US CUSTOMARY ■

RAW MATERIAL—COMMERCIAL STANDARD
MICRO SWITCH STANDARDS APPLY
DIMENSIONS ARE TO BE MET BEFORE PROTECTIVE COATINGS ARE APPLIED

WEIGHT

634SS2 | REPLACES PR-6219 | RELEASE NO. | DRAWING NUMBER M | ISSUE X 3 | CHECK | REVISIONS
A C048193 S L B 19 AUG 80
B C049098 J A P 18 MAR 81
CHECK | CHECK C E B 30 NOV 76 | CHECK | DRAWN G L H 24 NOV 76
FO-52863-A