WSA58M– ① ② ③ ④ ⑤ – ⑥

SWITCH FUNCTION CODE	SWITCH FUNCTION DESCRIPTION
2	MECHANICAL,MAINTAIN,SOLDER TERMINAL
B	MECHANICAL,MAINTAIN,NO/NO WIRELEADS
D	MECHANICAL,MAINTAIN,NC/NC WIRELEADS
F	MECHANICAL,MAINTAIN,NO/NC WIRELEADS

HOUSING MATERIAL CODE	HOUSING DESCRIPTION
1	STAINLESS STEEL
2	ALUMINUM, INHERENT

HOUSING ADAPTATION	BUTTON TYPE CODE	BUTTON DESCRIPTION
STAINLESS STEEL & ALUMINUM INHERENT HOUSING	0	NON.–ILLUMINATION
	2	RING ILLUMINATION
	3	POWER/STANDBY ILLUMINATION
ALUMINUM INHERENT HOUSING	R	RED BUTTON, ONLY FOR NON–ILLUMINATION
	G	GREEN BUTTON, ONLY FOR NON–ILLUMINATION
	Y	YELLOW BUTTON, ONLY FOR NON–ILLUMINATION
	B	BLUE BUTTON, ONLY FOR NON–ILLUMINATION
	D	GOLD BUTTON, ONLY FOR NON–ILLUMINATION

LED COLOR CODE	LED COLOR
N	NONE
R	RED
B	BLUE
G	GREEN
Y	YELLOW
W	WHITE

LED INLET VOLTAGE CODE		LED INLET VOLTAGE
NON–WIRELEADS	IF BLANK*	FOLLOW LED SPECIFICATION
WIRELEADS	IF BLANK*	FOLLOW LED SPECIFICATION
	05	5V
	12	12V
	24	24V

ANY CODE	DESCRIPTION
IF BLANK*	NA
XXX	PER CUSTOMER SPECIAL REQUEST

MECHANICAL CHARACTERISTICS:
SWITCH CIRCUITRY: SPDT-DB
SWITCH ACTION: MAINTAINED (PER CHART)
PRE-TRAVEL: 1.27 mm NOMINAL
OVER-TRAVEL: 0.254 mm NOMINAL
TOTAL TRAVEL: 1.524 mm NOMINAL
OPERATING FORCE: 525 g [5.15N] NOMINAL
RELEASEING FORCE: 340 g NOMINAL
PANEL THICKNESS:0.5-4.5mm

CONTACTS: SILVER
NUT TORQUE FORCE: MAX 11.5 kgf*cm [10 LB*in]

ELECTRICAL LIFE:
MAINTAINED: 5A@28VDC 25KCYCLES NOMINAL.

ENVIROMENTAL SPECIFICATIONS:
OPERATING TEMPERATURE: -40° C to +85° C[-40° F to +185° F]
IP67 COMPLIANT

ELECTRICAL SPECIFICATIONS:
DIELECTRIC STRENGTH: 1,000VAC
INSULATION RESISTANCE: 1G OHM
CONTACT RESISTANCE:
50m /250m OHMS MAX INITIAL(NON-WIRELEAD / WIRELEADS)

LED SPECIFICATIONS:
SEE LED SPECIFICATION

CERTIFICATION: UL 61058

* NOTE:
1.SUPPLY HEX NUT AND SEALING WASHER BULK IN PACKED

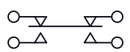

SPDT-DB
SCHEMATIC

LED SPECIFICATION

LED CODE	LED Color	CIRCUITRY	Vf(VDC) Color	If (mA)
R	RED		1.8 ~ 2.5	20
B	BLUE		2.8 ~ 3.5	20
G	GREEN		2.8 ~ 3.5	20
Y	YELLOW		1.8 ~ 2.5	20
W	WHITE		2.8 ~ 3.5	20

Notes:
Hand Soldering Temperature (4mm above from Body) : 320℃ for 3 seconds

WIRELEADS SPECIFICATION

WIRELEADS TYPE	WIRELEADS SPECIFICATION	SW TERMINAL	SW TERMINAL	LED COLOR	
		NO	NC	+	-
ILLUMINATION	AWG24 / UL1007	BLUE	YELLOW	RED	BLACK
NON-ILLUMINATION		BLUE	YELLOW	-	-

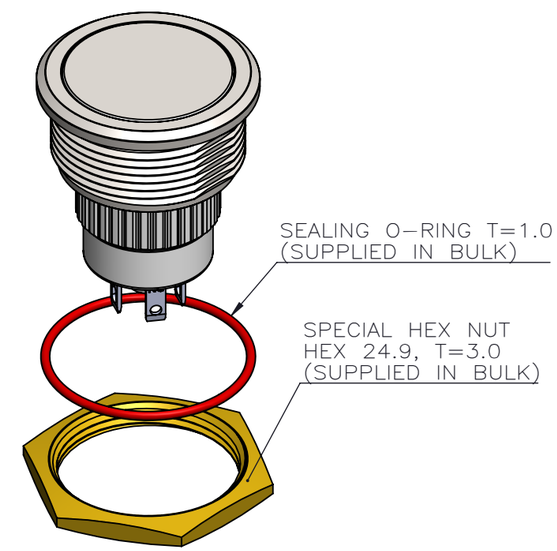

DWG TYPE: SALES DRAWING	DRAWN: K.Y.	TOLERANCES: UNLESS OTHERWISE NOTED X.X ± 0.5 X.XX ± 0.2 ANGULAR ±1°	DWG TITLE: WSA58M-MECHANICAL MAINTAIN, NONE/CENTER SPOT/ POWER STANDBY SYMBOL ILLUMINATION	ITW SWITCH LUMEX
STATUS: RELEASE	REVIEW: A.H.			
This document is the intellectual property of ITW Electronic Business Asia Co., Limited and may contain confidential, proprietary, privileged information protected by law. Neither this document nor any information it contains can be reproduced, transformed to any other format, or distributed, without written permission by ITW Electronic Business Asia Co., Limited. 本文件為安天德百電股份有限公司之智慧財產，非經許可不得擷取、複製、轉變成其他形式使用或散佈	APPROVED: V.W.	THIRD ANGLE PROJECTION	DWG NO.: WSA58M-2,B,D,F	
	DATE: 2017/12/12	REF: 58M-A,B	■ 管制文件 □ 非管制文件 / Unit: mm / SCALE: 3:2 / REV: 4	RoHS Compliant / SHEET 1 OF 3

This document is the intellectual property of ITW Electronic Business Asia Co., Limited and may contain confidential, proprietary, privileged information protected by law. Neither this document nor any information it contains can be reproduced, transformed to any other format, or distributed, without written permission by ITW Electronic Business Asia Co., Limited.
本文件為安天德百電股份有限公司之智慧財產，非經許可不得擷取、複製、轉變成其他形式使用或散佈

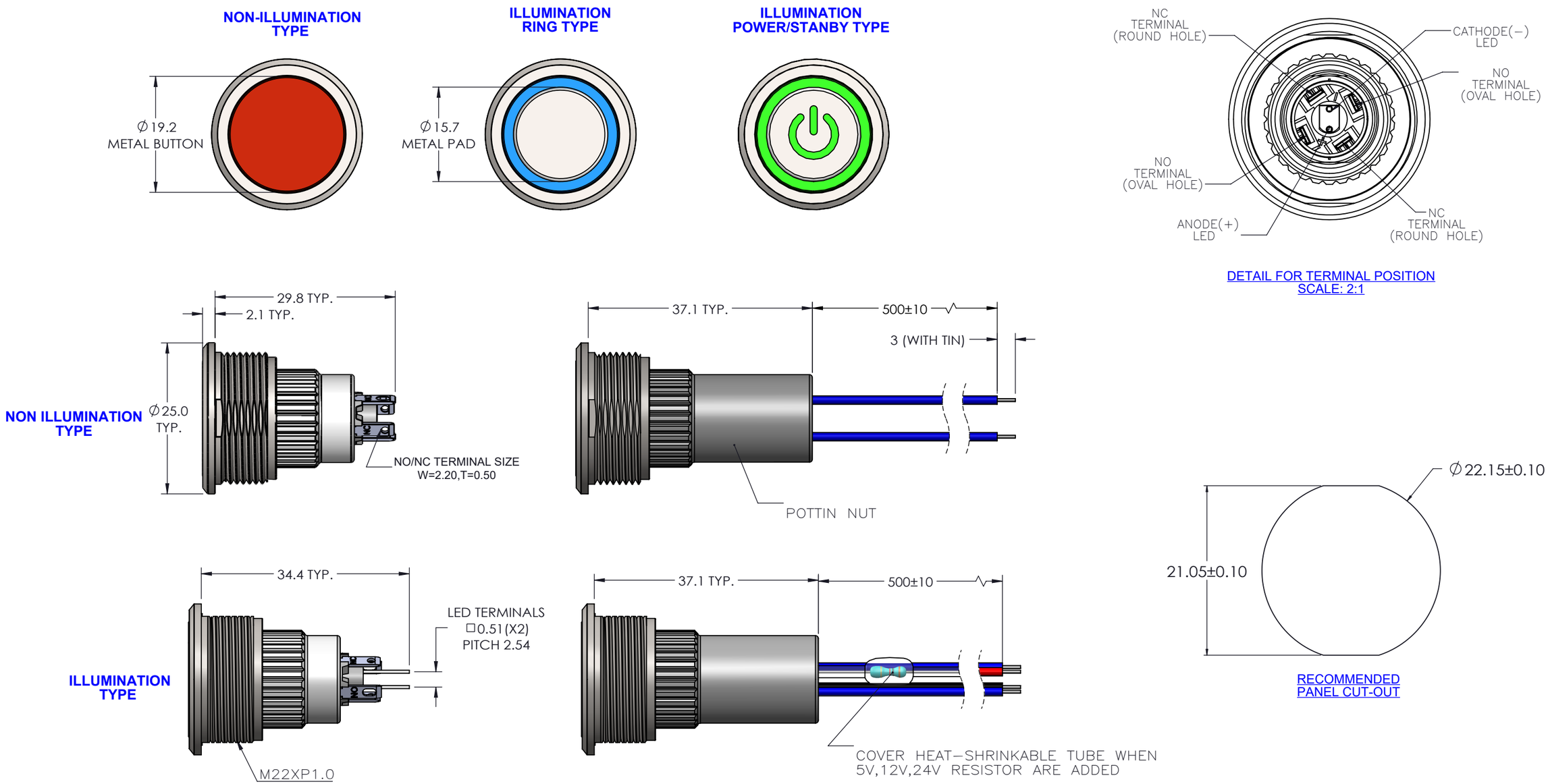

DWG TYPE SALES DRAWING	DRAWN K.Y.	TOLERANCES: UNLESS OTHERWISE NOTED X.X ± 0.5 X.XX ± 0.2 ANGULAR ±1°	DWG TITLE WSA58M-MECHANICAL MAINTAIN, NONE/CENTER SPOT/ POWER STANDBY SYMBOL ILLUMINATION			ITW SWITCH LUMEX
STATUS RELEASE	REVIEW a.H.					
This document is the intellectual property of ITW Electronic Business Asia Co., Limited and may contain confidential, proprietary, privileged information protected by law. Neither this document nor any information it contains can be reproduced, transformed to any other format, or distributed, without written permission by ITW Electronic Business Asia Co., Limited. 本文件為安天德百電股份有限公司之智慧財產，非經許可不得擷取、複製、轉變成其他形式使用或散佈	APPROVED v.w.	THIRD ANGLE PROJECTION	DWG NO. WSA58M-2,B,D,F			
	DATE 2017/12/12	REF: 58M-A,B	■ 管制文件 □ 非管制文件	Unit mm	SCALE 3:2	REV 4	RoHS Compliant	SHEET 2 OF 3