MATERIAL NUMBER	ENGINEERING NUMBER	FINISHED LENGTH
1300280068	DND23A-M005	1.64′ +1.75″ -0 [.5M +44.5 -0]
1300280070	DND23A-M010	3.28′ +2.19″ -0 [1.0M +55.6 -0]
1300280073	DND23A-M020	6.56′ +3.50″ -0 [2.0M +88.9 -0]
1300280075	DND23A-M030	9.84′ +3.50″ -0 [3.0M +88.9 -0]
1300280076	DND23A-M040	13.12′ +6.50″ -0 [4.0M +165.1 -0]
1300280077	DND23A-M050	16.40′ +6.50″ -0 [5.0M +165.1 -0]
1300280078	DND23A-M060	19.69′ +6.50″ -0 [6.0M +165.1 -0]

(B) PART NUMBER LEGEND

DND23A-M005

FINISHED LENGTH:

M005= 0.5 METER
M010= 1.0 METER
M100= 10.0 METERS

(B) CABLE LENGTH TOLERANCES

<.3M [1FT]: +19mm-0 [+.75in-0]
.3 - .9M [1 - 3FT]: +44.5mm-0 [+1.75in-0]
.9 - 1.8M [3 - 6FT]: +55.6mm-0 [+2.19in-0]
1.8 - 3.7M [6 - 12FT: +88.9mm-0 [+3.50in-0]
3.7 - 7.3M [12 - 24FT]: +165.1mm-0 [+6.50in-0]
7.3-14.6M [24 - 48FT]: +317.5mm-0 [+12.50in-0]
14.6 - 30.5M [48-100FT]: +622.3mm-0 [+24.50in-0]
OVER 30M [100FT] +2% OF FINISHED LENGTH

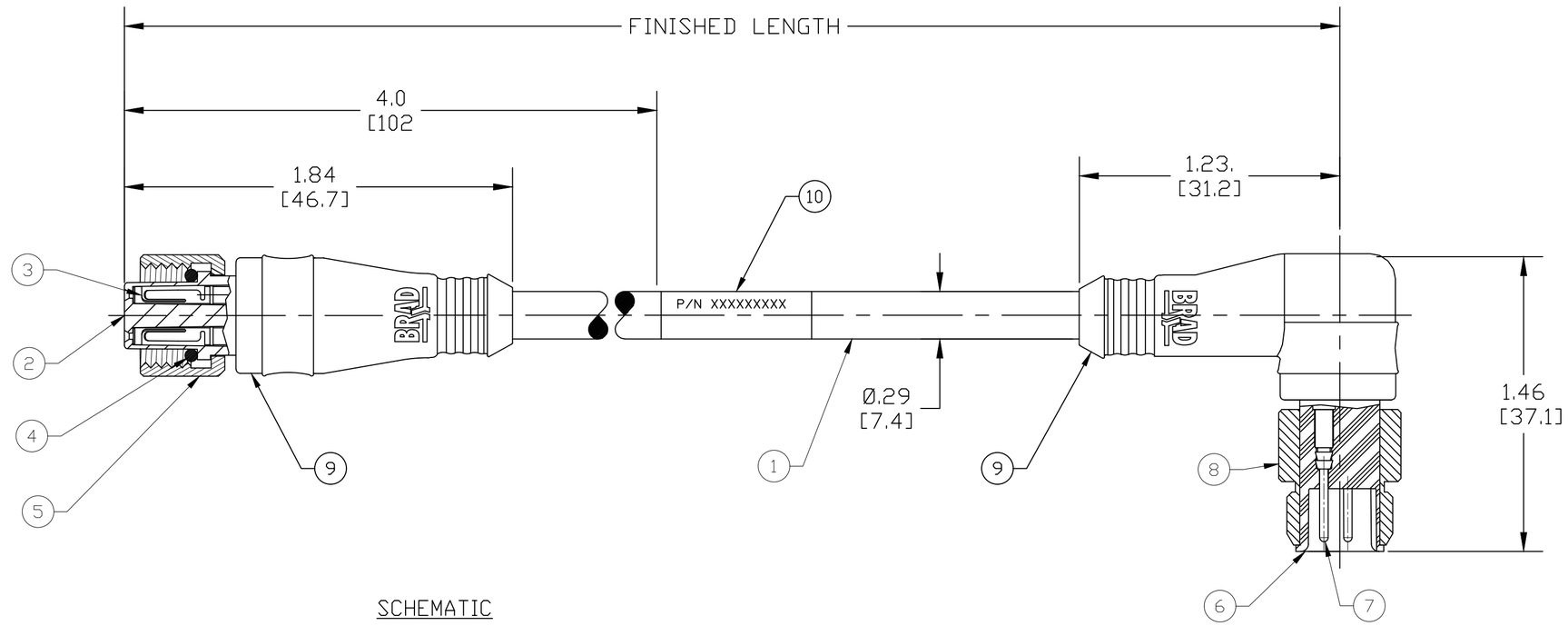

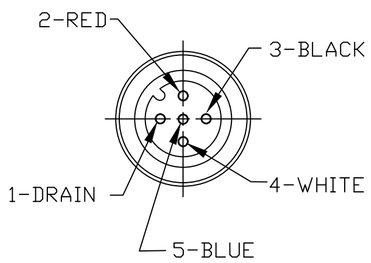

FEMALE INSERT FACE VIEW

(B)
NOTES:
1. MATERIAL: AS NOTED
2. FINISH: AS NOTED
3. ELECTRICAL:
   VOLTAGE: 250V
   CURRENT: 4A
4. TEMP RATING: -25°C TO +80°C
5. PROTECTION: IP67 (WHEN MATED)
6. COUPLING THREAD: M12 X 1.0
7. ALL DIMS ARE FOR REFERENCE UNLESS TOLERANCED OR NOTED OTHERWISE

SCHEMATIC

1	DRAIN	1
V+ 2	RED	2 - V+
V- 3	BLACK	3 - V-
CAN_H 4	WHITE	4 - CAN_H
CAN_L 5	BLUE	5 - CAN_L

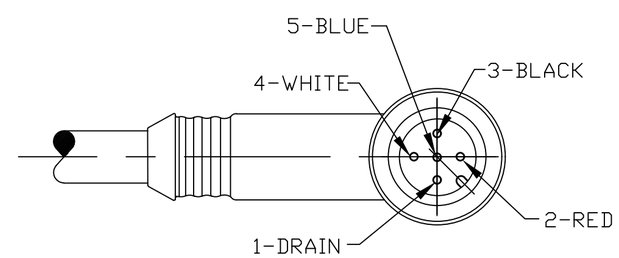

MALE-FACE VIEW

ITEM	DESCRIPTION	MATERIAL	FINISH
10	LABEL	VINYL	BLACK/YELLOW
9	OVERMOLDS	TPC (B)	GRAY
8	COUPLING, MALE	ZINC DIE-CAST	BLACK E-COAT
7	CONTACT PIN	Cu ALLOY	GOLD PLATED
6	INSERT, MALE	NYLON	BLACK
5	COUPLING, FEMALE	ZINC DIE-CAST	BLACK E-COAT
4	O-RING	NITRILE	RED
3	CONTACT SOCKET	Cu ALLOY	GOLD PLATED
2	INSERT, FEMALE	NYLON	BLACK
1	DEVICENET, 22AWG DROP CABLE	PVC JACKET	GRAY

DOCUMENT STATUS	P1	RELEASE DATE	2022/07/12 19:57:13

THIS DRAWING CONTAINS INFORMATION THAT IS PROPRIETARY TO MOLEX ELECTRONIC TECHNOLOGIES, LLC AND SHOULD NOT BE USED WITHOUT WRITTEN PERMISSION

FUNCTIONAL SYMBOLS: FA=0, FC=0, FP=0
DIVISIONAL SYMBOLS

DIMENSION UNITS: INCH/MM
SCALE: NTS

GENERAL TOLERANCES (UNLESS SPECIFIED)

	mm	INCH
4 PLACES	±----	±----
3 PLACES	±----	±----
2 PLACES	±----	±----
1 PLACE	±----	±----
0 PLACES	±----	±----
ANGULAR TOL ±	---- °	

DRAFT WHERE APPLICABLE MUST REMAIN WITHIN DIMENSIONS

CURRENT REV DESC: OVERMOLD WAS PVC, UPDATE NOTES, ADD P/N LEGEND, AND LENGTH TOLS

EC NO: 713760
DRWN: RSTONE 2022/05/06
CHK'D: ALEON01 2022/05/27
APPR: BWOODMAN 2022/07/12

INITIAL REVISION:
DRWN: TWOLDEGE 2010/01/11
APPR: JFMURPHY 2010/01/20

THIRD ANGLE PROJECTION | DRAWING: C-SIZE | SERIES: 130028

molex

MICRO CHANGE DEVICE NET
5 POLE MALE 90 DEG TO FEMALE STRAIGHT
22AWG PVC

PRODUCT CUSTOMER DRAWING

DOCUMENT NUMBER	DOC TYPE	DOC PART	REVISION
SD-130028-007	PSD	001	B

MATERIAL NUMBER | CUSTOMER: GENERAL MARKET | SHEET NUMBER: 1 OF 1

FORMAT: IN-ACAD-tb-prod-C
REVISION: B
DATE: 2020/01/14