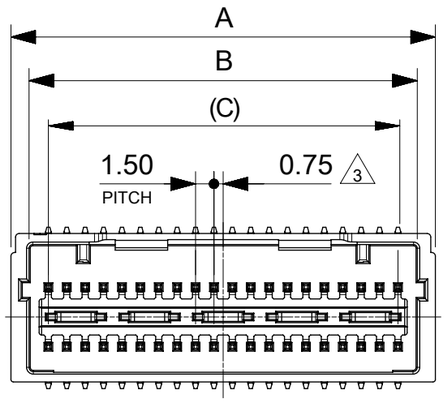

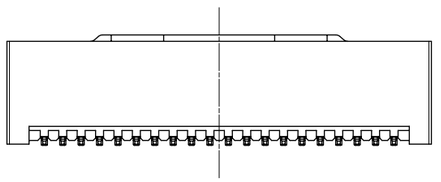

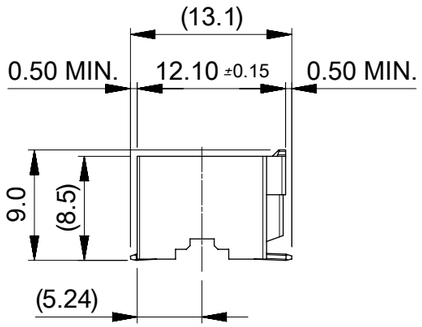

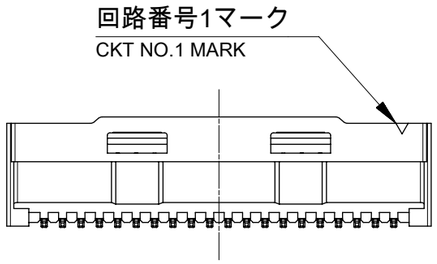

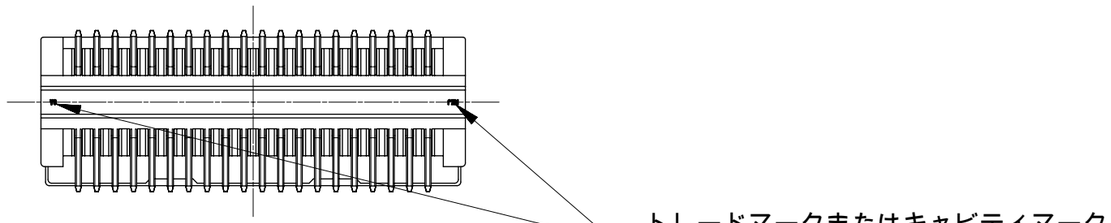

NOTE

1. 嵌合相手：201644シリーズ
   MATE WITH:201644 SERIES.
2. 製品番号
   MATERIAL NO.

201645 0** *
極数 CIRCUIT SIZE
色 COLOR

NO.	COLOR
0	NATURAL
1	BLACK

3. 偶数極に適用
   APPLY FOR CKT SIZE EQUAL EVEN.
4. 端子テール部及びネイルの平坦度は0.12MAX.とする
   TAIL AND NAIL COPLANARITY TO BE 0.12 MAX.

D	C	B	A	オーダー番号 ORDER NO.	極数 CKT NO.
21.45	28.50	31.65	34.60	201645040*	40
21.45	27.00	30.15	33.10	201645038*	38
21.45	25.50	28.65	31.60	201645036*	36
17.85	24.00	27.15	30.10	201645034*	34
17.85	22.50	25.65	28.60	201645032*	32
17.85	21.00	24.15	27.10	201645030*	30
17.85	19.50	22.65	25.60	201645028*	28
12.00	18.00	21.15	24.10	201645026*	26
12.00	16.50	19.65	22.60	201645024*	24
12.00	15.00	18.15	21.10	201645022*	22
12.00	13.50	16.65	19.60	201645020*	20
8.50	12.00	15.15	18.10	201645018*	18
8.50	10.50	13.65	16.60	201645016*	16
8.50	9.00	12.15	15.10	201645014*	14
5.55	7.50	10.65	13.60	201645012*	12
5.55	6.00	9.15	12.10	201645010*	10

部品 PART	材質 MATERIAL	
ハウジング HOUSING	ポリアミド(PA), ガラス充填, UL94V-0, 色：注記参照 POLYAMIDE(PA), GLASS FILLED, UL94V-0, COLOR: SEE NOTE	
ターミナル TERMINAL	黄銅 BRASS	
	錫めっき (リフロー処理), 1.0μm以上 TIN PLATED (HEAT TREATED MATTE TIN), 1.0μm MIN.	前めっき PRE-PLATED
	ニッケルめっき(下地), 0.5μm以上 NICKEL (UNDER-PLATED), 0.5μm MIN.	

DOCUMENT STATUS | P1 | RELEASE DATE | 2018/05/24 07:40:48

THIS DRAWING CONTAINS INFORMATION THAT IS PROPRIETARY TO MOLEX ELECTRONIC TECHNOLOGIES, LLC AND SHOULD NOT BE USED WITHOUT WRITTEN PERMISSION

DIMENSION UNITS	SCALE
mm	2:1

GENERAL TOLERANCES (UNLESS SPECIFIED)

ANGULAR TOL	±	3.0 °
4 PLACES	±	0.2
3 PLACES	±	0.2
2 PLACES	±	0.2
1 PLACE	±	0.2
0 PLACES	±	0.2

DRAFT WHERE APPLICABLE MUST REMAIN WITHIN DIMENSIONS

CURRENT REV DESC:

EC NO: 177140
DRWN: AISHIKAWA 2018/05/24
CHK'D: AIDA 2018/05/24
APPR: TKANEKO 2018/05/24

INITIAL REVISION:
DRWN: MIKEDA01 2017/02/09
APPR: TKANEKO 2017/02/15

THIRD ANGLE PROJECTION | DRAWING: A3-SIZE | SERIES: 201645

molex

SPOT-ON1.5
DUAL PLUG ASSY W/O NAIL

PRODUCT CUSTOMER DRAWING

DOCUMENT NUMBER	DOC TYPE	DOC PART	REVISION
2016450001	PSD	000	E

MATERIAL NUMBER	CUSTOMER	SHEET NUMBER
2016450***	GENERAL	1 OF 3

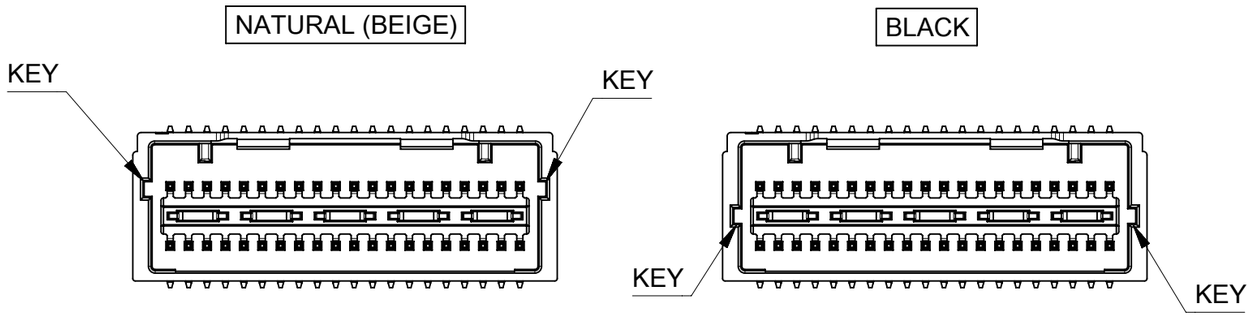

色によるキー位置違い
COLOR VS KEY POSITION

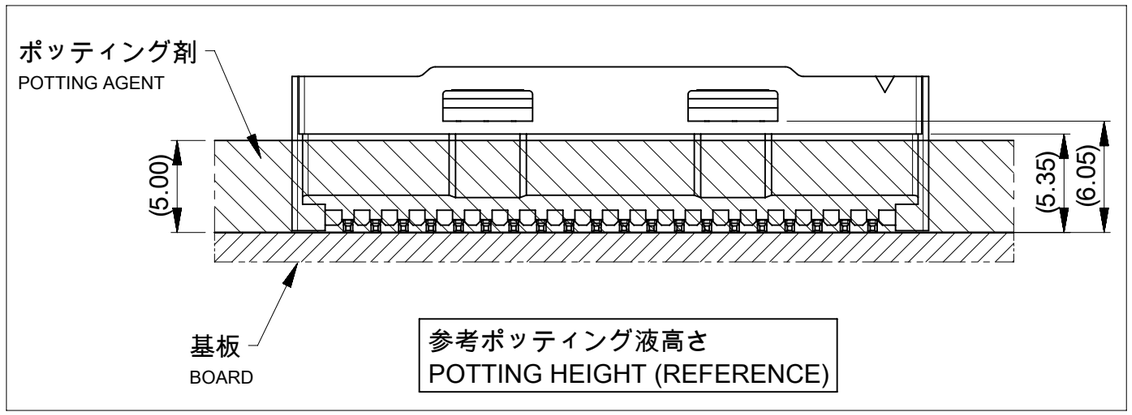

参考ポッティング液高さ
POTTING HEIGHT (REFERENCE)

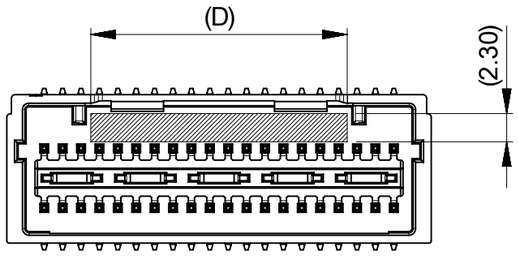

吸着範囲
VACCUME AREA

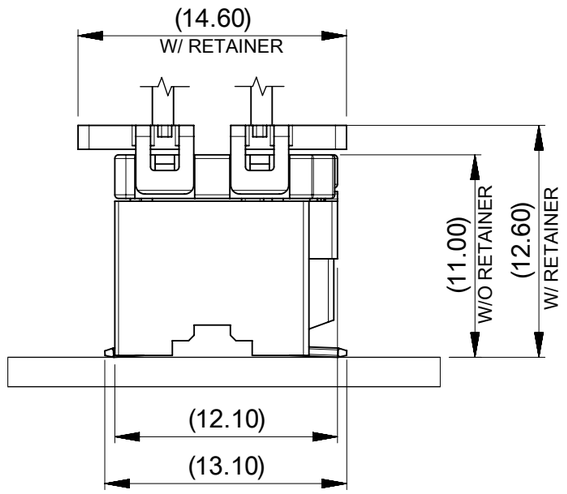

嵌合高さ
MATING HEIGHT

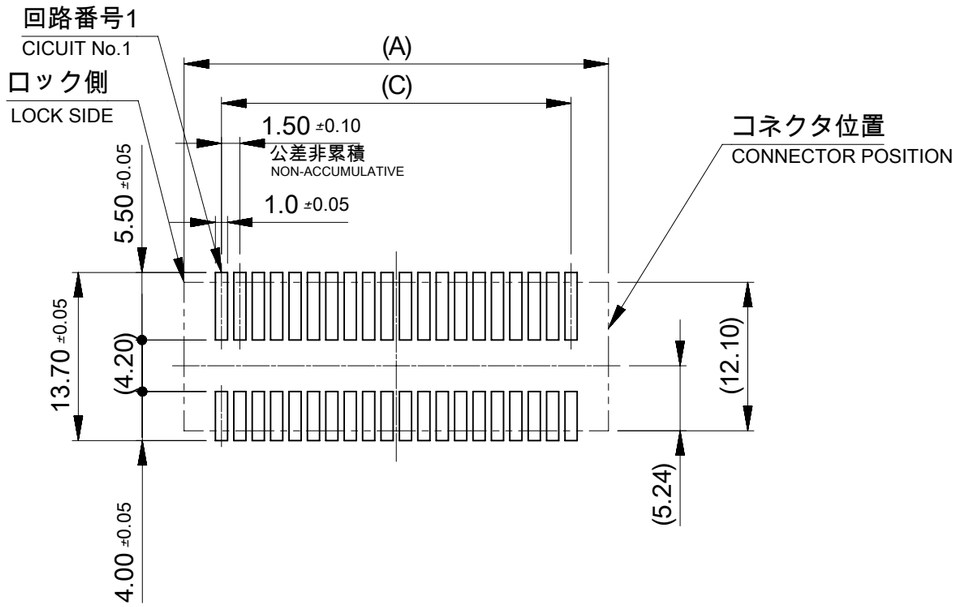

推奨基板パターンレイアウト
RECCOMENDED PCB PATTERN LAYOUT

メタルマスク厚：0.15
METAL MASK THICKNESS: 0.15
開口率: 100%
APARTURE RATILO: 100%

BLACK	NATURAL (BEIGE)	HOUSING COLOR
2016450401	2016450400	40
2016450381	2016450380	38
2016450361	2016450360	36
2016450341	2016450340	34
2016450321	2016450320	32
2016450301	2016450300	30
2016450281	2016450280	28
2016450261	2016450260	26
2016450241	2016450240	24
2016450221	2016450220	22
2016450201	2016450200	20
2016450181	2016450180	18
2016450161	2016450160	16
2016450141	2016450140	14
2016450121	2016450120	12
2016450101	2016450100	10

エンボステープ梱包
EMBOSSED TAPE PKG

2 オーダー番号
ORDER NO.

極数
CKT NO.

THIS DRAWING CONTAINS INFORMATION THAT IS PROPRIETARY TO MOLEX ELECTRONIC TECHNOLOGIES, LLC AND SHOULD NOT BE USED WITHOUT WRITTEN PERMISSION

DIMENSION UNITS	SCALE
mm	2:1

GENERAL TOLERANCES (UNLESS SPECIFIED)

ANGULAR TOL	±	3.0 °
4 PLACES	±	0.2
3 PLACES	±	0.2
2 PLACES	±	0.2
1 PLACE	±	0.2
0 PLACES	±	0.2

DRAFT WHERE APPLICABLE MUST REMAIN WITHIN DIMENSIONS

CURRENT REV DESC:

EC NO: 177140
DRWN: AISHIKAWA 2018/05/24
CHK'D: AIDA 2018/05/24
APPR: TKANEKO 2018/05/24

INITIAL REVISION:
DRWN: MIKEDA01 2017/02/09
APPR: TKANEKO 2017/02/15

THIRD ANGLE PROJECTION | DRAWING A3-SIZE | SERIES 201645

molex

SPOT-ON1.5
DUAL PLUG ASSY W/O NAIL

PRODUCT CUSTOMER DRAWING

DOCUMENT NUMBER	DOC TYPE	DOC PART	REVISION
2016450001	PSD	000	E

MATERIAL NUMBER	CUSTOMER	SHEET NUMBER
2016450***	GENERAL	2 OF 3

DOCUMENT STATUS	P1	RELEASE DATE	2018/05/24	07:40:48

FORMAT: master-thumbnail-A3
REVISION: H
DATE: 2018/01/18

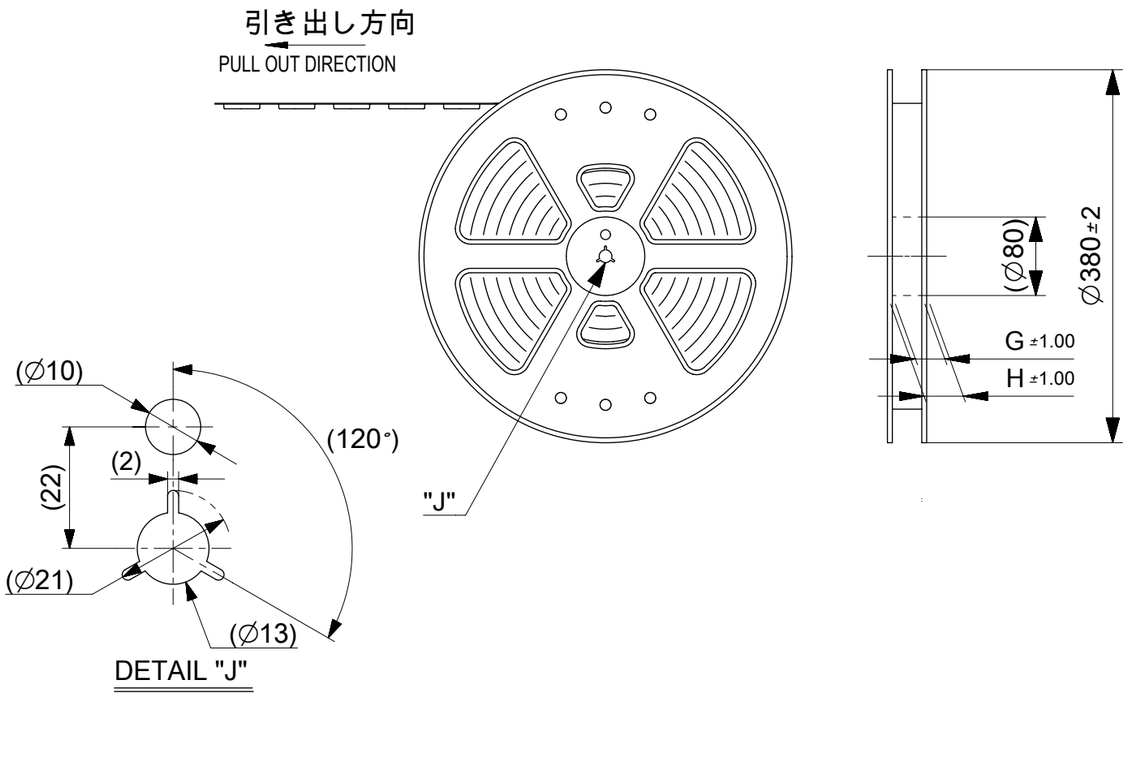

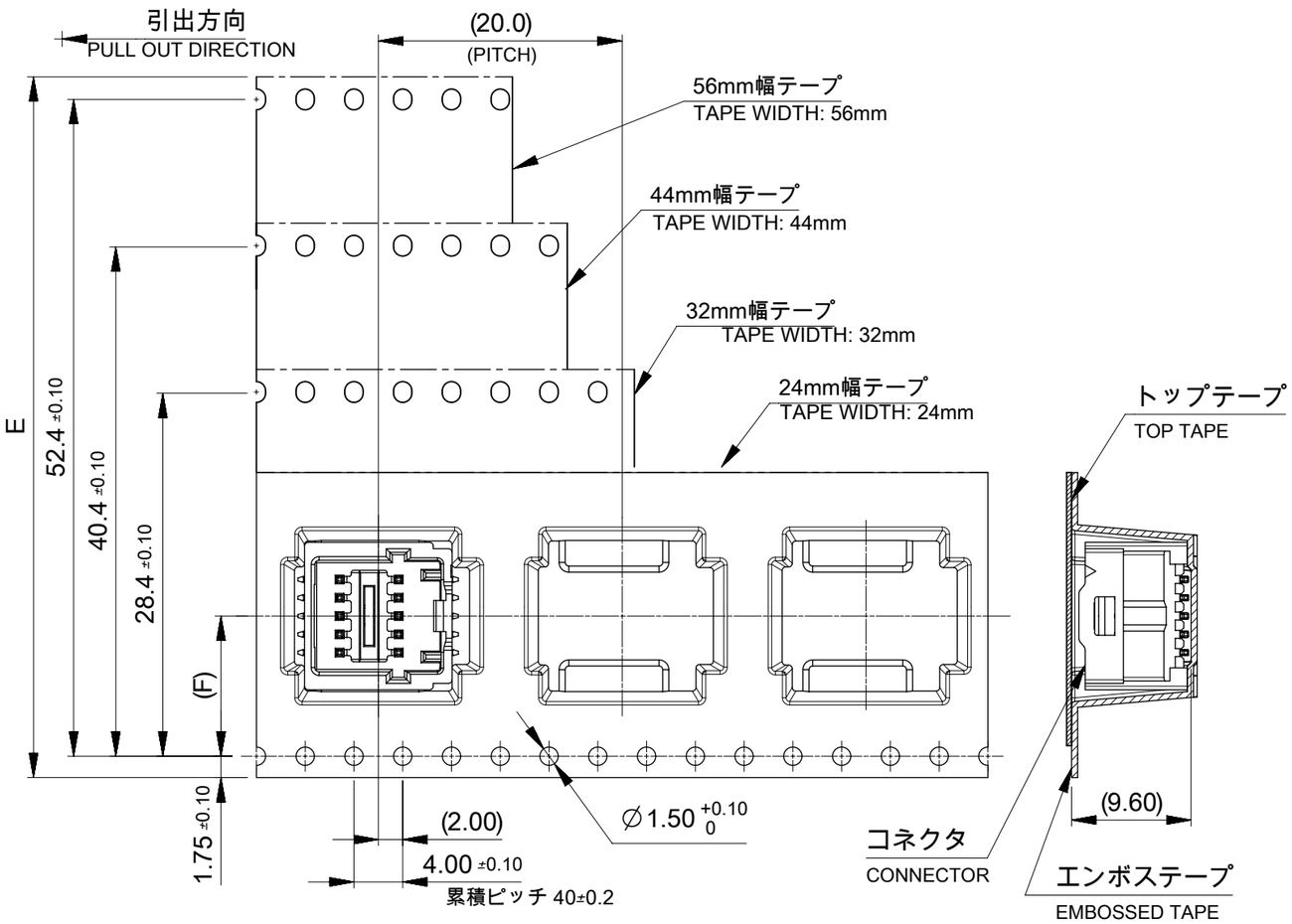

H	G	F	E エンボステープ幅 WIDTH OF TAPE	エンボステープ梱包 EMBOSSED TAPE PKG オーダー番号 ORDER NO.	極数 CKT NO.
60.4	56.4	26.2	56 ±0.3	201645040*	40
				201645038*	38
48.4	44.4	20.2	44 ±0.3	201645036*	36
				201645034*	34
				201645032*	32
				201645030*	30
				201645028*	28
				201645026*	26
				201645024*	24
				201645022*	22
36.4	32.4	14.2	32 ±0.3	201645020*	20
				201645018*	18
				201645016*	16
				201645014*	14
28.4	24.4	11.5	$24^{+0.3}_{-0.1}$	201645012*	12
				201645010*	10

NOTES

5. 梱包数量： 450個 / リール
   NUMBER OF CONNECTORS : 450 PCS/REEL.
6. リードテープ長さ
   LEAD TAPE LENGTH.

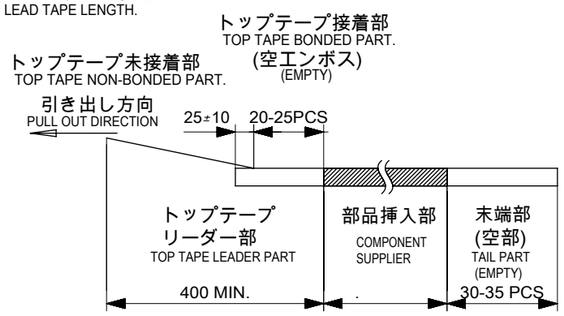

7. 材料
   キャリアテープ：ポリスチレン(PS)、その他
   トップテープ：ポリエステル(PET)、その他
   リール：ポリスチレン(PS)リサイクル材を含む
   MATERIALS
   CARRIER TAPE : POLYSTYRENE(PS), OTHER
   TOP TAPE : POLYESTER(PET), OTHER
   REEL : POLYSTYRENE(PS) RECYCLE MATERIAL CONTAINED

THIS DRAWING CONTAINS INFORMATION THAT IS PROPRIETARY TO MOLEX ELECTRONIC TECHNOLOGIES, LLC AND SHOULD NOT BE USED WITHOUT WRITTEN PERMISSION

DIMENSION UNITS	SCALE
mm	2:1

GENERAL TOLERANCES (UNLESS SPECIFIED)

ANGULAR TOL	±	3.0 °
4 PLACES	±	0.2
3 PLACES	±	0.2
2 PLACES	±	0.2
1 PLACE	±	0.2
0 PLACES	±	0.2

DRAFT WHERE APPLICABLE MUST REMAIN WITHIN DIMENSIONS

CURRENT REV DESC:

EC NO: 177140
DRWN: AISHIKAWA 2018/05/24
CHK'D: AIDA 2018/05/24
APPR: TKANEKO 2018/05/24

INITIAL REVISION:
DRWN: MIKEDA01 2017/02/09
APPR: TKANEKO 2017/02/15

THIRD ANGLE PROJECTION | DRAWING: A3-SIZE | SERIES: 201645

molex

SPOT-ON1.5
DUAL PLUG ASSY W/O NAIL

PRODUCT CUSTOMER DRAWING

DOCUMENT NUMBER	DOC TYPE	DOC PART	REVISION
2016450001	PSD	000	E

MATERIAL NUMBER	CUSTOMER	SHEET NUMBER
2016450***	GENERAL	3 OF 3

DOCUMENT STATUS	P1	RELEASE DATE	2018/05/24 07:40:48

FORMAT: master-sheet-A3
REVISION: H
DATE: 2018/01/16