| MATERIAL NO. | ENGINEERING NO. | FINISHED LENGTH |
|---|---|---|
| 1200660162 | 883030A09M003 | 0.3M [1FT] |
| 1200660188 | 883030A09M100 | 10M [32FT 10 IN] |
| 1200661606 | 883030A09M250 | 25M [82FT] |

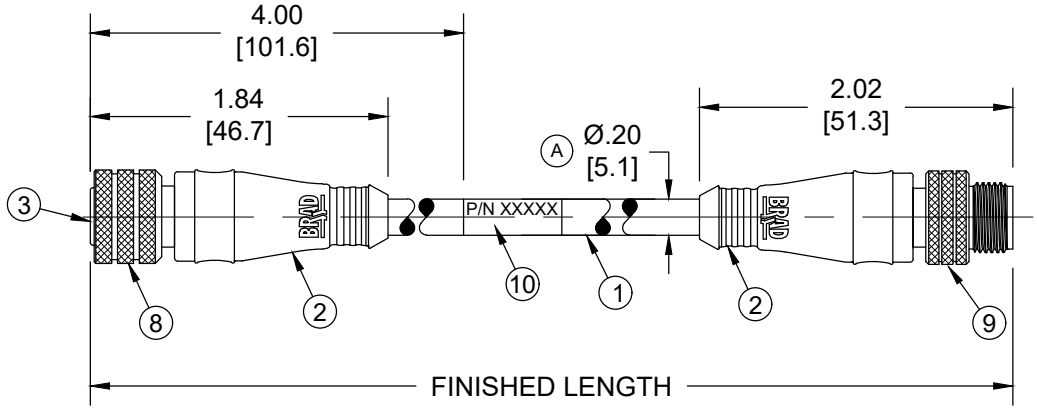


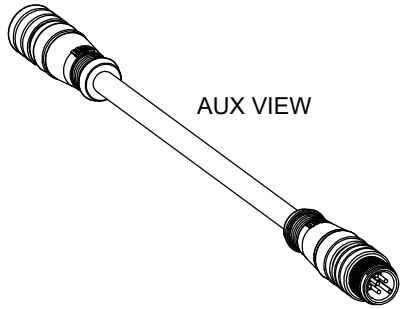


FEMALE FACE VIEW

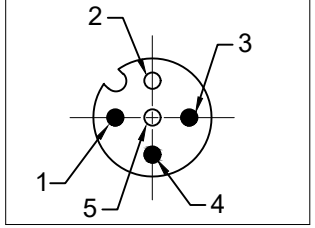

MALE FACE VIEW

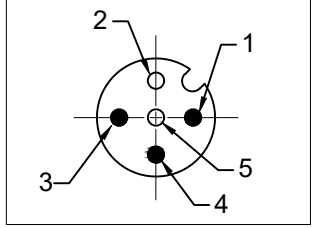

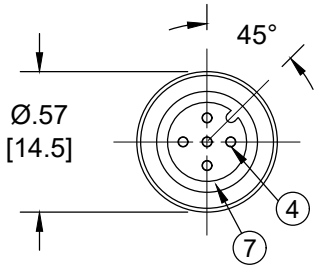


FEMALE FACE VIEW

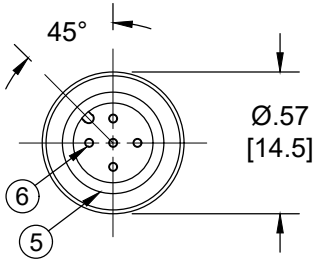


MALE FACE VIEW

NOTES:
1. MATERIAL: AS NOTED
2. FINISH: AS NOTED
3. ELECTRICAL:
   VOLTAGE: 250 VAC/VDC
   CURRENT: 4A
4. TEMP RATING: -20°TO +105°C
5. PROTECTION: IP67 (WHEN MATED)
6. COUPLING THREAD: M12X1
7. UL RECOGNIZED FILE: E152210 (A)
   CSA CERTIFIED FILE: LR6837
8. ALL DIMENSIONS ARE FOR REFERENCE
   UNLESS TOLERANCED OR NOTED OTHERWISE

PART NO. MATRIX

883030A09M003

FINISHED LENGTH
M005 = 0.5 METER
M010 = 1 METER
M100 = 10 METER

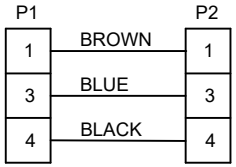


WIRING DIAGRAM

(A)

CABLE LENGTH TOLERANCES
<.3M [1FT]: +19mm-0 [ +.75in-0]
.3 - .9M [1 - 3FT]: +44.5mm-0 [+1.75in-0]
.9 - 1.8M [3 - 6FT]: +55.6mm-0 [+2.19in-0]
1.8 - 3.7M [6 - 12FT: +88.9mm-0 [+3.50in-0]
3.7 - 7.3M [12 - 24FT]: +165.1mm-0 [+6.50in-0]
7.3-14.6M [24 - 48FT]: +317.5mm-0 [+12.50in-0]
14.6 - 30.5M [48-100FT]: +622.3mm-0 [+24.50in-0]
OVER 30M [100FT] +2% OF FINISHED LENGTH

| ITEM | DESCRIPTION | MATERIAL | FINISH | |
|---|---|---|---|---|
| 10 | WRAP LABEL | VINYL | BLACK/YELLOW | (A) |
| 9 | MALE COUPLING NUT | BRASS | NICKEL PLATED | |
| 8 | FEMALE COUPLING NUT | BRASS | NICKEL PLATED | |
| 7 | O-RING | VITON | RED | |
| 6 | PIN CONTACT | COPPER ALLOY | GOLD OVER NICKEL | |
| 5 | MALE INSERT | PUR | BLACK | (A) |
| 4 | SOCKET CONTACT | COPPER ALLOY | GOLD OVER NICKEL | |
| 3 | FEMALE INSERT | PUR | BLACK | (A) |
| 2 | OVERMOLD | PUR | YELLOW | |
| 1 | #22/5 CABLE | PVC JACKET | YELLOW | |

| DOCUMENT STATUS | P1 | RELEASE DATE | 2021/07/14 21:16:11 |
|---|---|---|---|

THIS DRAWING CONTAINS INFORMATION THAT IS PROPRIETARY TO MOLEX ELECTRONIC TECHNOLOGIES, LLC AND SHOULD NOT BE USED WITHOUT WRITTEN PERMISSION

FUNCTIONAL SYMBOLS
FA=0
FC=0
FP=0
DIVISIONAL SYMBOLS

DIMENSION UNITS: INCH/MM
SCALE: NTS

GENERAL TOLERANCES (UNLESS SPECIFIED)

| | mm | INCH |
|---|---|---|
| 4 PLACES | ±---- | ±---- |
| 3 PLACES | ±---- | ±---- |
| 2 PLACES | ±---- | ±---- |
| 1 PLACE | ±---- | ±---- |
| 0 PLACES | ±---- | ±---- |
| ANGULAR TOL ± | ---- ° | |

DRAFT WHERE APPLICABLE MUST REMAIN WITHIN DIMENSIONS

CURRENT REV DESC: ITEM 3 & 5 WERE NYLON & ITEM #10 WAS MYLAR. ADDED UL & CSA IN NOTES. ADDED CABLE DIA & TOL CHART. MODIFIED PN TABLE

EC NO: 669893
DRWN: ABENJAMINLW 2021/02/26
CHK'D: RSTONE 2021/07/12
APPR: BWOODMAN 2021/07/14

INITIAL REVISION:
DRWN: LSTEMMLE 2010/01/25
APPR: NSTAUDIG 2010/01/29

THIRD ANGLE PROJECTION | DRAWING: A-SIZE | SERIES: 120066

molex

MICRO-CHANGE CORDSET, M12,
3 POLE, FEMALE-MALE, STRAIGHT,
SINGLE KEY, #22/5 AWG

PRODUCT CUSTOMER DRAWING

| DOCUMENT NUMBER | DOC TYPE | DOC PART | REVISION |
|---|---|---|---|
| SD-120066-010 | PSD | 001 | A |

| MATERIAL NUMBER | CUSTOMER | SHEET NUMBER |
|---|---|---|
| SEE CHART | GENERAL MARKET | 1 OF 1 |

FORMAT: IN-ACAD-tb-prod-A
REVISION: B
DATE: 2020/01/14