AN1933
Rev 1.00
March 9, 2016

ISL28025 Precision Digital Power Monitor Evaluation Kit User Guide

Introduction

The Precision Digital Power Monitor (DPM) Evaluation Kit is a three evaluation board design that demonstrates the functionality of the ISL28025. The ISL28025 is an IC with a 16-bit analog-to-digital converter (ADC), an 8-bit digital-to-analog converter (DAC), and analog comparators that monitor for undervoltage, overvoltage and overcurrent conditions. The IC is serially controlled through an I^2C bus. The device abides by the PMBus standards.

The DPM Evaluation kit is accompanied by a graphical user interface (GUI) that allows the user to configure ISL28025 for monitoring bus voltage and current in a specific application. The GUI has a data save feature allowing the transfer of measurement data to another software application for analysis.

The ISL28025 DPM evaluation kit consists of three boards; a dongle, a generic ISL28025 board and an ISL28025 demonstration board.

Dongle Evaluation Board (ISLUSBPWRDONGLE1Z)

The dongle board mates from a PC to the ISL28025 via a microcontroller. The microcontroller converts USB commands sourced from the PC to an I^2C header. The I^2C pins (SCL and SDA) are connected to the right angle header at the edge of the board. The dongle board has a circuit that converts the USB supply voltage to 3.3V. The 3.3V supply circuit has an ISL28022 connected to monitor the current sourced by the supply. Each circuit has been optimized to measure 100mA at full scale. The 3.3V supply output and the SDA and SCL lines of the I^2C bus are routed to the right angle connector.

ISL28025 Generic Board (ISL28025EVAL1Z)

The generic ISL28025 board is a non-configured ISL28025 that connects the analog inputs to the outside world. The board allows a user to build a system that requires voltage, current or power monitoring around the ISL28025. The analog inputs (VINP, VINM and VBUS) of the ISL28025 accept input voltages ranging from 0V to 60V. The ISL28025 allows the user to uniquely configure the slave address via jumper selections. The ISL28025 can be powered from a user defined source or the 3.3V supply generated from the USB voltage. The acceptable power supply voltage range for the ISL28025 is from 3V to 5.5V. The external clock/interrupt pin is routed to the outside world via a jumper selection. The maximum measurable input differential (VINP - VINM) is ±80mV. The differential voltage between the VINP and VINM pins can withstand a magnitude of 60V. The differential supply tolerance allows for the debugging of catastrophic circuit events.

ISL28025 Demo Board (ISL28025EVAL2Z)

A peripheral circuit is required to demonstrate the functionality of the ISL28025. The ISL28025 is paired up with a buck/boost regulator (ISL9110) and some sample loads to measure the current.

The buck/boost circuit allows the user to define a unique load that connects to the regulator. All features of the ISL28025 are available.

Ordering Information

PART NUMBER	DESCRIPTION
ISL28025EVAL1Z	Evaluation Board
ISL28025EVKIT1Z	Evaluation Kit

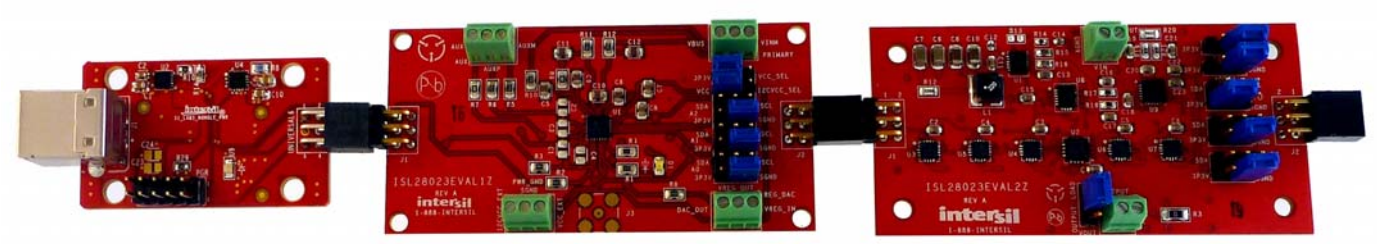

USB DONGLE

ISL28025EVAL1Z
GENERIC EVAL BOARD

ISL28025EVAL2Z
DEMO BOARD

FIGURE 1. ISL28025 EVALUATION KIT EVALUATION BOARDS

Evaluation Package (Online Order)

The Digital Power Monitor Generic Evaluation Kit contains the following items:

- ISL28025 Demo Board (ISL28025EVAL2Z)
- ISL28025 Generic Board (ISL28025EVAL1Z)
- USB to I^2C Dongle Board (ISLUSBPWRDONGLE1Z)
- Evaluation Software (Online)
- User Guide
- ISL28025 Datasheet

Documentation for individual device can be found in the following link: http://www.intersil.com/products/ISL28025

System Requirements

- Windows 98/NT/2000/XP/VISTA/WIN7/WIN8
- Available USB Port

Software Installation

Download the latest Evaluation Board GUI (Graphical User Interface) from the following link:

http://www.intersil.com/products/ISL28025

Installing the Software

From the link supplied in the previous section, download and run the *executable file* to start installing the GUI. The user will be greeted by the screen shown in Figure 2. Continue through the installer and read the instructions. The PC and PCB should *not* be connected via the USB port until after the installation has completed.

FIGURE 2. INSTALLATION WELCOME SCREEN

Hardware Setup

- Connect the USB 2.0 Cable to the PC first, and then to the Evaluation Board
- The computer may ask about installing software for new found hardware; select “Yes, this time only”
- On the following screen, it will ask about how to install hardware. Select the recommended option (Installing from CD) and follow the directions
- The USB is the only connector needed

Running the Software with the ISL28025 Generic Board

To run the program, go to the “Start” menu and choose the ISL28025 setup folder, and then choose the ISL28023_25EvalSoftwareSetup icon. Once clicked, the demo software window should appear as illustrated in Figure 3.

Enable communication between the evaluation board and the computer by pressing the “Connect to Device” button at the bottom right of the software window. If connection is successful, the text on the button will be red and read “Disconnect Device” as shown in Figure 3. Otherwise, the button text will not change.

The evaluation program controls and measures an ISL28025 device on a single I^2C/SMBus. The main software window displays one site.

DATA COLLECTING

To start collecting data, press the “Start Data Collecting” button located to the left of the “Connect to Device” button at the bottom of the screen. Once pressed, the color of the text and verbiage of the button will change to “Stop Data Collecting”. The defaults state of the software reads each DPM for shunt and bus voltages. To change the read settings of the DPM, toggle the check box/label next to each numerical read out. The backlight of the display will toggle between yellow and gray. A backlight of yellow means a channel is enabled. A change in the functionality of the DPM will change the mode value for the respective channel. The mode of each DPM is displayed in the lower left hand corner of each channel’s display.

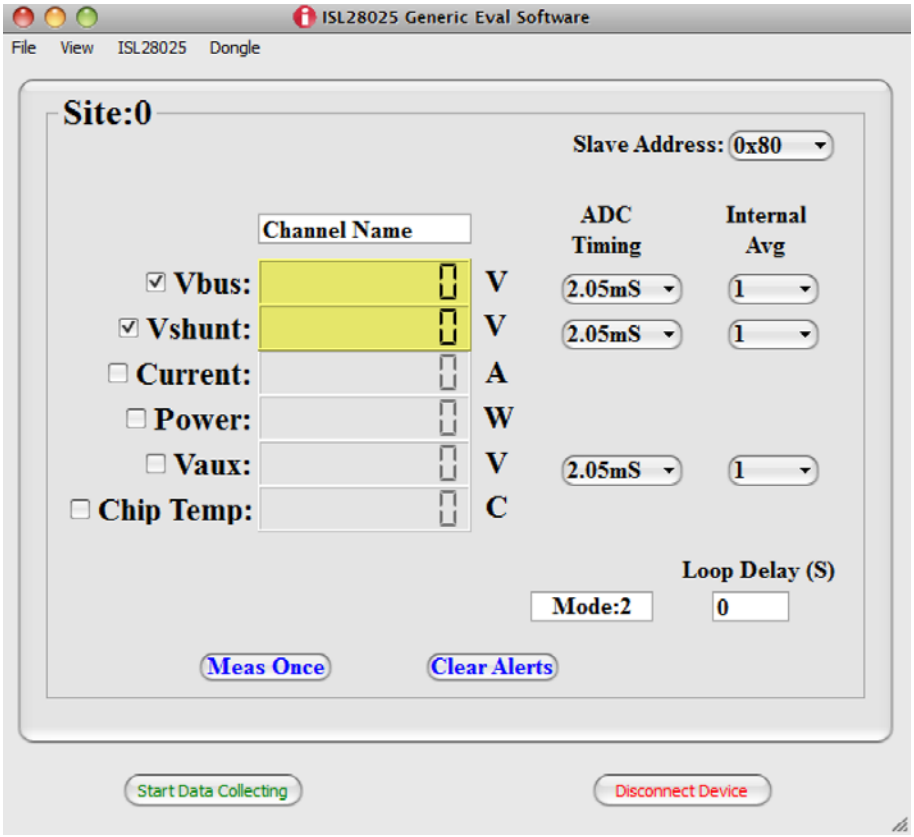

FIGURE 3. MAIN WINDOW OF THE ISL28025 GENERIC USER INTERFACE (GUI) CONNECTED TO THE ISL28025 GENERIC BOARD

DPM MEASUREMENT FUNCTIONALITY

Enabling the current functional block on the DPM interface requires the user to enter a shunt resistor value. The entered value is stored in the DPM calibration register and is used to calculate the current or power depending on the enabled check box. Figure 4 illustrates the dialog box that request the shunt resistor value when current functionality is enabled.

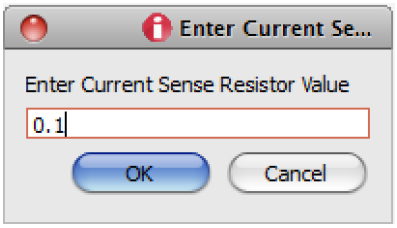

FIGURE 4. DIALOG BOX THAT ALLOW THE USER TO ENTER THE SENSE RESISTOR VALUE INTO THE ISL28025 DEVICE

ADC TIMING AND INTERNAL AVERAGE CONTROLS

The ADC Timing is the acquisition time of the ADC for the channel. The acquisition timing selection of a channel is located to the right of the channel's measurement display in Figure 3. The user can select ADC acquisition times ranging from 64µs to 2.05ms for each of the four channels shown in Figure 3.

The user adjusts the number of internal averages the ISL28025 makes before reporting out a value. The ISL28025 internal averages can be programmed from a single measurement to 4096 measurements.

LOOP DELAY

The loop delay field in the lower right corner of the GUI allows the use to program a delay between measurements. When the ISL28025 is program to fast acquisition times, the screen is updating quickly such that the user cannot read the measurements that is taken by the ISL28025. The loop delay field inserts a time delay after each measurement. Allowing for a time delay makes the measurements readable.

SINGLE MEASUREMENT CONTROL

Pressing the Meas Once button on the main panel will measure each enabled individual channel once.

THRESHOLD AND AUXILIARY CONTROLS

Choose the Threshold selection under the ISL28025 drop down menu that invokes the Auxiliary Control dialog box. The dialog box allows the user to configure the threshold detectors of the ISL28025 chip. Figure 5 shows the Auxiliary Controls Dialog Box.

The threshold levels of the analog comparators for the overvoltage (OV), undervoltage (UV) and overcurrent conditions (OC) are created from three 6-bit DAC. The DACs have voltage ranges. There are two voltage ranges for the OC comparator and six for the OV/UV comparators. The analog comparators can be enabled and disabled by checking the enable check boxes.

Depending on the voltage range selected, the voltage range for each threshold is stated above and below each input box.

The OC analog detector detection polarity can be set via checking the “Reverse Current Direction?” check box.

The OV detector can be converted to a temperature threshold detector by checking the “Temperature Detect?” check box.

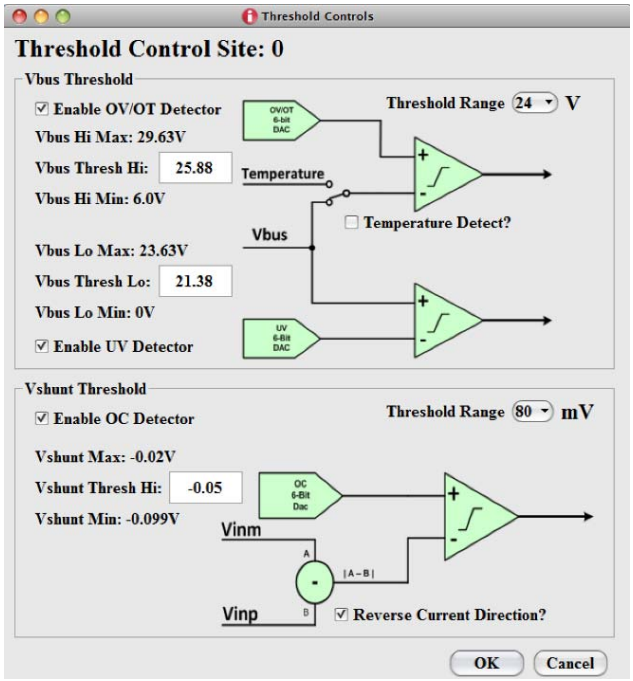

FIGURE 5. THE WINDOW THAT CONTROLS THE ISL28025 COMPARATORS

SMBALERT

Choose the SMBALERT selection under the ISL28025 drop down menu. A window similar to the Figure 6 will appear.

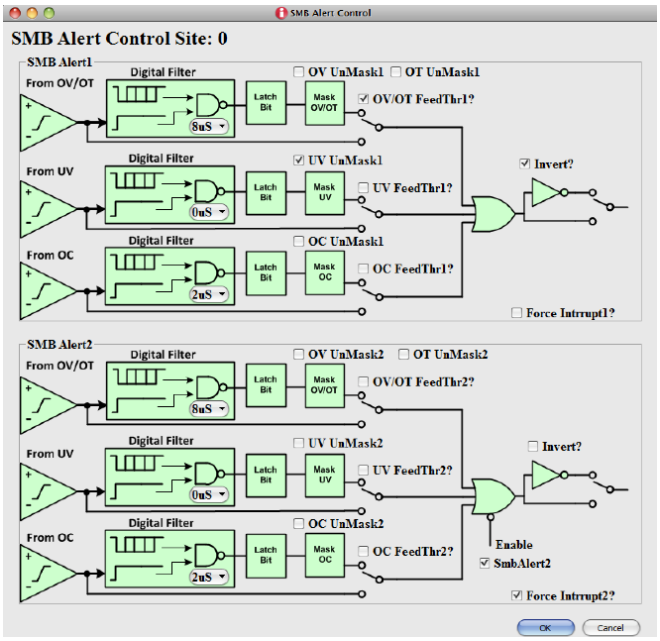

FIGURE 6. THE SMBALERT CONFIGURATION WINDOW

The outputs of the threshold comparators feed into the SMBALERT control window. The comparator output can be routed to the SMBALERT pins of the device via checking the respective feed-through check box.

The default state of each comparator connects to a digital timing filter and mask circuitry. All three comparators feed into an Or gate to determine the status of the SMBALERT pin.

The active state polarity can be selected by checking the invert check box of the respective SMBALERT pin.

There is one digital filter per threshold comparator. Setting the digital filter changes the behavior for both SMBALERT pins. The digital filter filters out aberrant responses from the analog comparators by way of fault longevity. The device allows the user to choose between four fault timing windows before allowing a fault to pass to the latch bit (D flip-flop).

The mask block allows the user to determine if the fault is passed to the Or gate.

Each SMBALERT pin can be controlled independent of comparator circuitry by checking the force interrupt pin.

The default state of the SMBALERT2 pin is disabled. This puts the pin state to tri-state. The SMBALERT2 pin has push-pull output stage while the SMBALERT1 is an open drain.

EXTERNAL CLOCK ENABLE

The ISL28025 can be synchronized to an external clock to reduce measurement noise in a system. To configure and enable the external clock feature choose the EXTCLK selection in the ISL28025 drop down menu. A dialog box, illustrated in Figure 8 will appear allowing the user to enable the external clock feature.

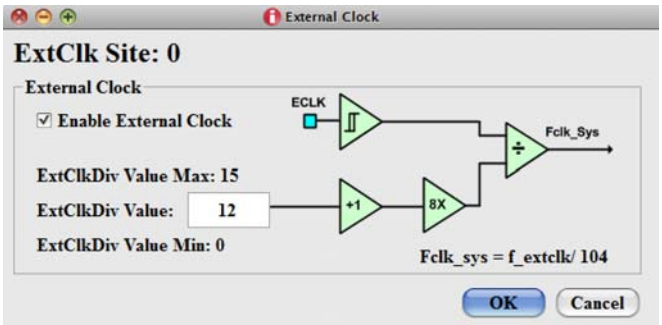

FIGURE 7. THE EXTERNAL CLOCK WINDOW FOR THE ISL28025

The input bandwidth of the external clock pin is roughly 30MHz. The external clock frequency can be divided to match the internal system clock frequency of 500kHz. Choosing a clock division that results in internal clock frequency close to 500kHz will guarantee ADC acquisition times similar to the default times.

PEAK CURRENT

Choose the Current Min/Max selection under the ISL28025 drop down menu. A window similar to the Figure 8 appears.

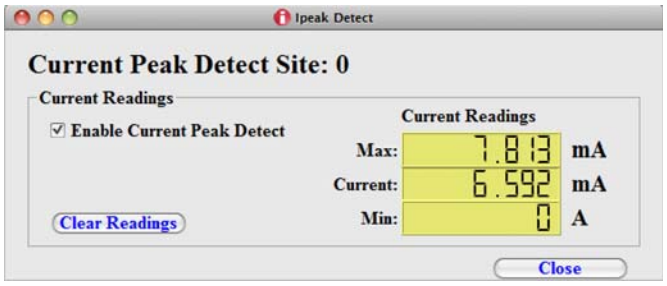

FIGURE 8. THE CURRENT PEAK DETECT WINDOW

The current peak detect feature reports the min and max reading of a single sample. For example, suppose the settings for the Vshunt input has an acquisition time of 64µs and an internal average of 4096. The sense resistor has been digitized, such that it enables current measurements. If the measure once button has been pressed, the device will perform 4096 averages and place the average value in the current register. With the current peak detect enabled, the maximum and the minimum current readings from the 4096 measurements are placed in the current peak register and displayed in the window. If the measure once button is pressed again, the Max/Min readings will reflect the Max/Min readings for 8192 measurements. The Max/Min will reflect the Max/Min current for all readings since the registers have been cleared last.

Connecting Multiple ISL28025 Evaluation Boards to a Dongle

An ISL28025 design can have 55 devices connected on a single I^2C bus. The ISL28025 Evaluation kit allows the user to cascade up to 54 ISL28025 Evaluation Boards. The dongle uses a slave address (0x9E) for measuring the current and voltage of the 3.3V. Figure 9 is a picture of the dongle board connected to multiple ISL28025 evaluation boards

Connect the Dongle board to the computer via a USB cable. Start the ISL28025 evaluation kit demo hardware.

Connect the software to the Dongle by pressing the "Connect to Device" button at the bottom right of the software window. If the connection is successful, the text on the button will be red and read "Disconnect Device". All buttons on the front panel of the GUI will be enabled. The GUI should look similar to Figure 3 on page 3. When the software connects to the microcontroller, the software scans for all the acceptable ISL28025 slave addresses to determine if the device is connected to the dongle

Once connected, each device can be configured uniquely by pressing the next button that envelops the main features of the GUI. Figure 10 illustrates the button to push.

SYSTEM VIEW

When multiple ISL28025 devices are connected to the dongle board a system view screen is available. The system view allows the user to view all the ISL28025 devices as configured.

To enter the system view, select System under the View drop down menu. The window in Figure 11 will appear while the main GUI window will disappear.

The window will size to the number of ISL28025 devices connected to the dongle.

Pressing the "Start Data Collecting" button will loop through all sites and measure the configure parameters for each ISL28025 device.

Pressing the "Save Data" button will save data for all sites. See "Saving Data" on page 7 section for more detail.

Pressing the "Single Site View" button will restore the main GUI view.

RESET THE DEVICE

Choosing the Reset selection under the ISL28023 drop down menu will soft reset the ISL28023 and restore the device to the default value. A soft reset will perform an auto calibration of the offset for each of the four channels of the device.

USB DONGLE | ISL28025EVAL1Z GENERIC EVAL BOARD | ISL28025EVAL1Z GENERIC EVAL BOARD | ISL28025EVAL1Z GENERIC EVAL BOARD

FIGURE 9. PICTURES OF SEVERAL ISL28025 GENERIC BOARDS CONNECTED TO A DONGLE ENABLING SYSTEM VIEW

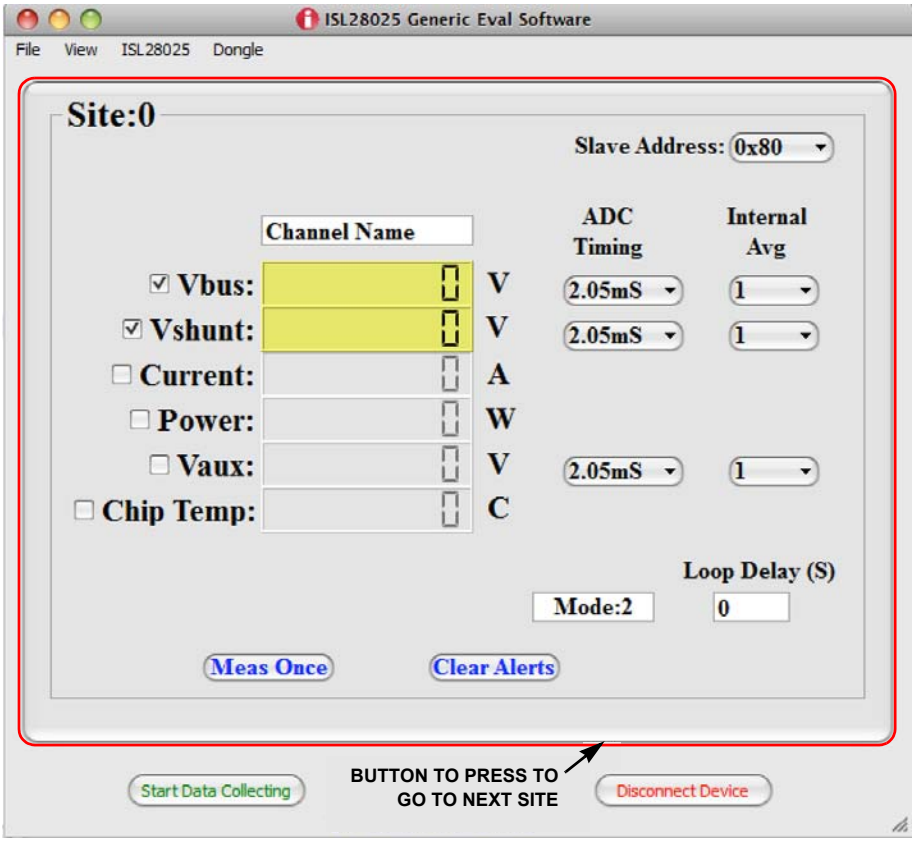

FIGURE 10. ISL28025 SINGLE SITE VIEW ILLUSTRATES THE BUTTON TO GO TO THE NEXT DEVICE/SITE

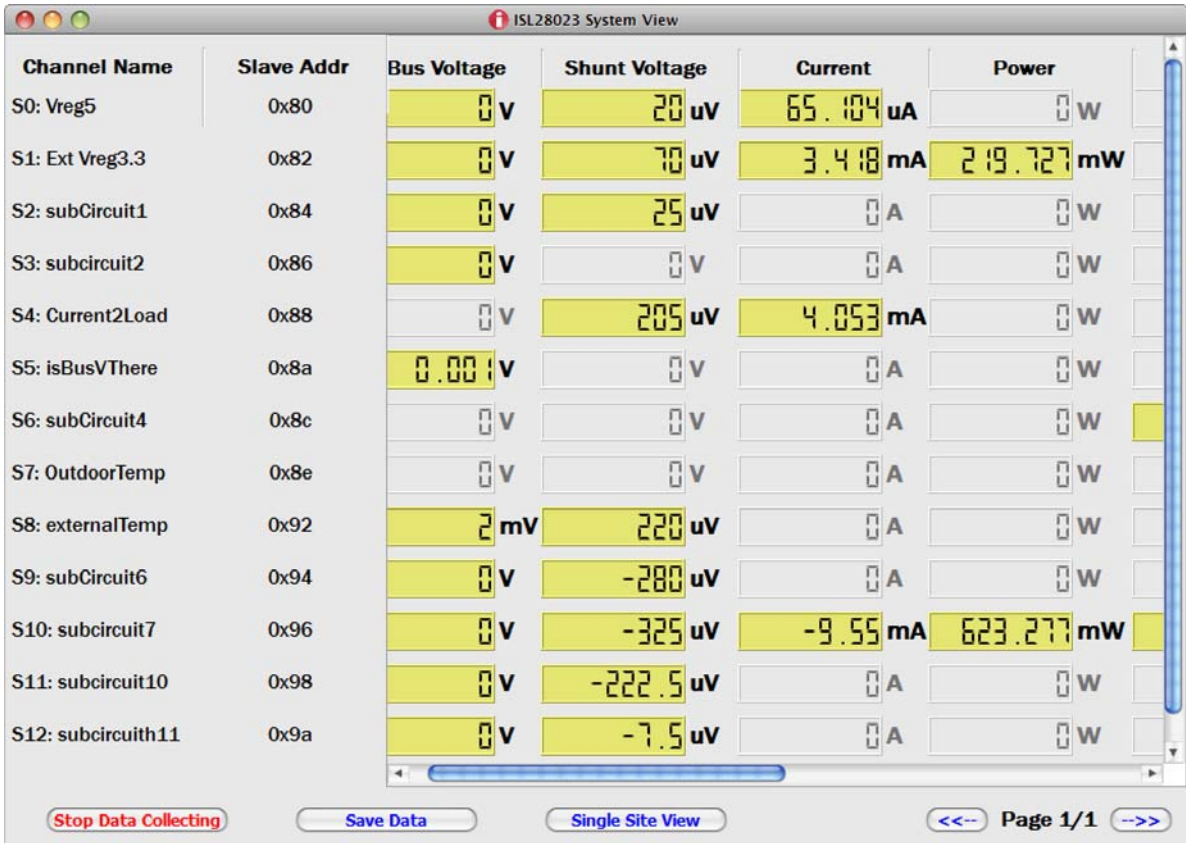

FIGURE 11. SYSTEM VIEW FOR THE ISL28025 SOFTWARE

USB SUPPLIES

The ISL28025 Demo Software allows a user to build their own board to mate with the Dongle board. The final design of the third party board may use the dongle generated 3.3V power supply. The user can monitor the current draw from 3.3V supply by selecting USB Supplies under the Dongle drop down menu. The dialog box in Figure 12 will appear once the USB Supplies are selected.

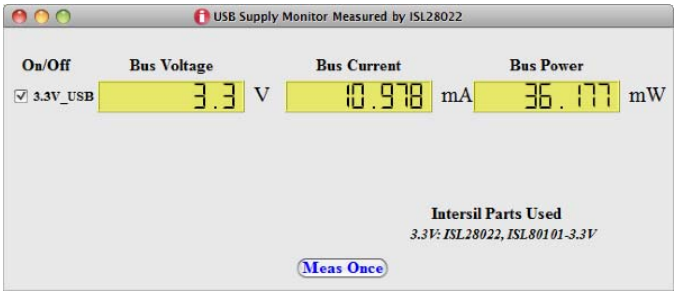

FIGURE 12. USB SUPPLY WINDOW OF THE 3.3V GENERATED SUPPLY

I²C TRANSACTION

The ISL28025 Demo Software allows a user to build their own board to mate with the Dongle board. The final design may have an I²C Device incorporated into the design. The I²C Transaction selection in the Dongle drop down menu allows the user to send read and write commands to I²C devices. Figure 13 is the dialog box that appears when the I²C transaction is chosen under the Dongle drop down menu.

FIGURE 13. THE I²C TRANSACTION WINDOW

SAVING DATA

The DPM software allows the user to store a set number of points of data. Go to the menu bar of the ISL28025 DPM Demo Software window and choose File –> Save Data. Choosing the Save Data option will open a dialog box asking for the filename and directory of the save path. Figure 14 is an illustration of the dialog box.

The file name entered in the dialog box is the base name for all files saved. A unique named file is generated for each measured parameter (Vbus, Vshunt, Current, Power, etc...) across all active devices. The software only saves data to a file for each measured parameter selected. If a measured parameter is not selected, then a file with the non-selected measured parameter is not generated. For example, Vaux and VauxShunt are files that would not be generated for the configuration of the DPM window shown in Figure 14.

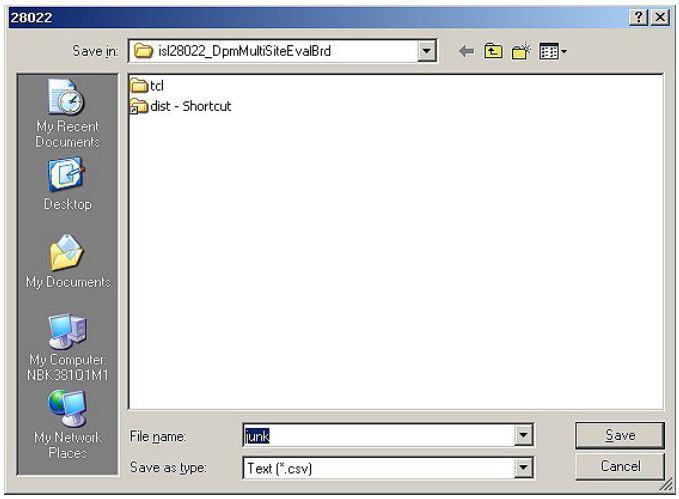

FIGURE 14. THE DIALOG BOX THAT REQUESTS WHERE TO SAVE THE DATA FILES

All saved files are comma delimited. The naming convention of the file is< base name>_<measured parameter>_dataset. The base name is the file name entered in the save dialog box. The measured parameter names are vbus, vshunt, current and power, etc.

Upon completion of the save dialog box, an input box (Figure 15) asks for the number of points to be saved per site if the GUI is in the Single Site Mode. Otherwise, the software will save the same number of points for all sites in the System mode.

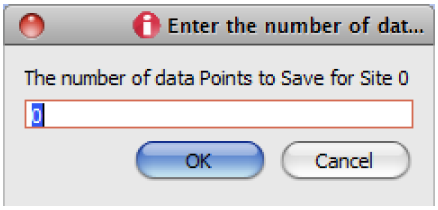

FIGURE 15. THE DIALOG BOX THAT ASKS THE USER TO ENTER THE NUMBER OF DATA POINTS TO SAVE

Pressing the OK button with a valid numerical entry will begin data collection. The numerical values changes on the main window while the data is being recorded. The completion of data collection will commence when all of the active measurement numbers cease to change.

The settings of all channels should be finalized prior to invoking the Save Data feature. The user has the option of uniquely naming each channel and having the channel name be passed to the column name of each respective data file. Changing the field named “Channel Name” in Figure 10 on page 6 will change the name of the column data.

SAVING AND LOADING THE CONFIGURATION FILES

The software allows the user to save and load the configuration of each of the devices. To load or save a configuration, select Load Config or Save Config under the File drop down menu. A window will appear similar to Figure 14 that will ask for directory information of the file to save or load.

Running the Software with the ISL28025 Demo Board

Connect and power the DEMO board to the dongle board as shown in Figure 16. The Demo board can either be powered by the USB 3.3V power supply or an external power supply can be applied. Placing the jumper to short pin 2 with either the 3.3V pin or VIN pin will set the connection path. The input voltage selection header is labeled as VIN_SEL. If the 3.3V supply from the USB is chosen, note that the USB can only supply ~500mA. Limit the load ranges to less than 500mA with this option. If using an externally supply, the demo board can accept voltages from 1.8V to 5.5V.

Once properly powered, launch the ISL28025 software. The same software used to control the ISL28025 generic board. Press the “Connect To Device” button. The software will scan all allowable slave addresses and determine the type of board connected to the dongle. If the demo board is successfully connected to the dongle, the window in Figure 17 appears.

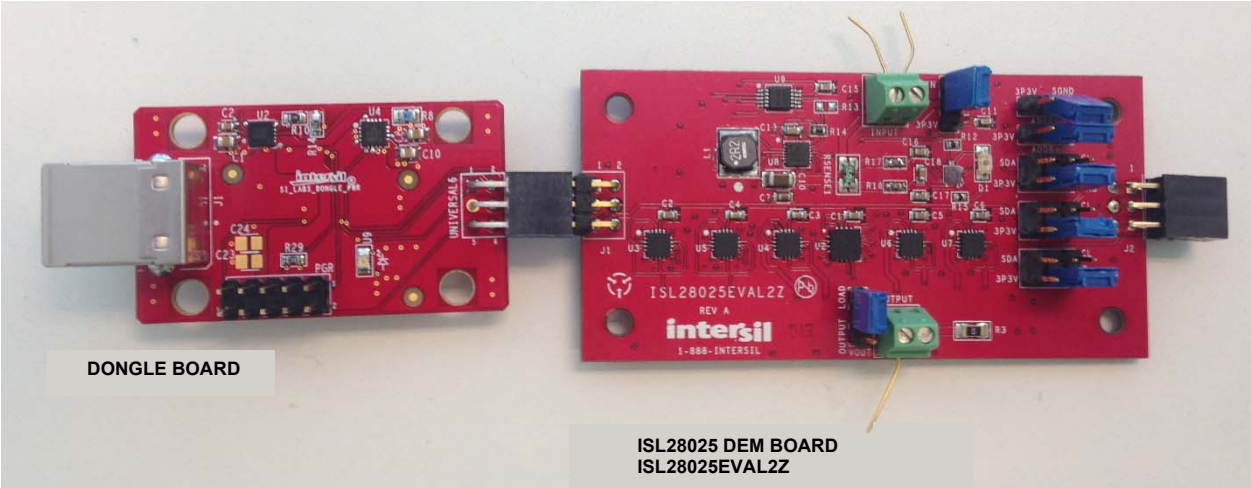

FIGURE 16. THE ISL28025 DEMO CONNECTED TO THE DONGLE BOARD AND A BATTERY PACK

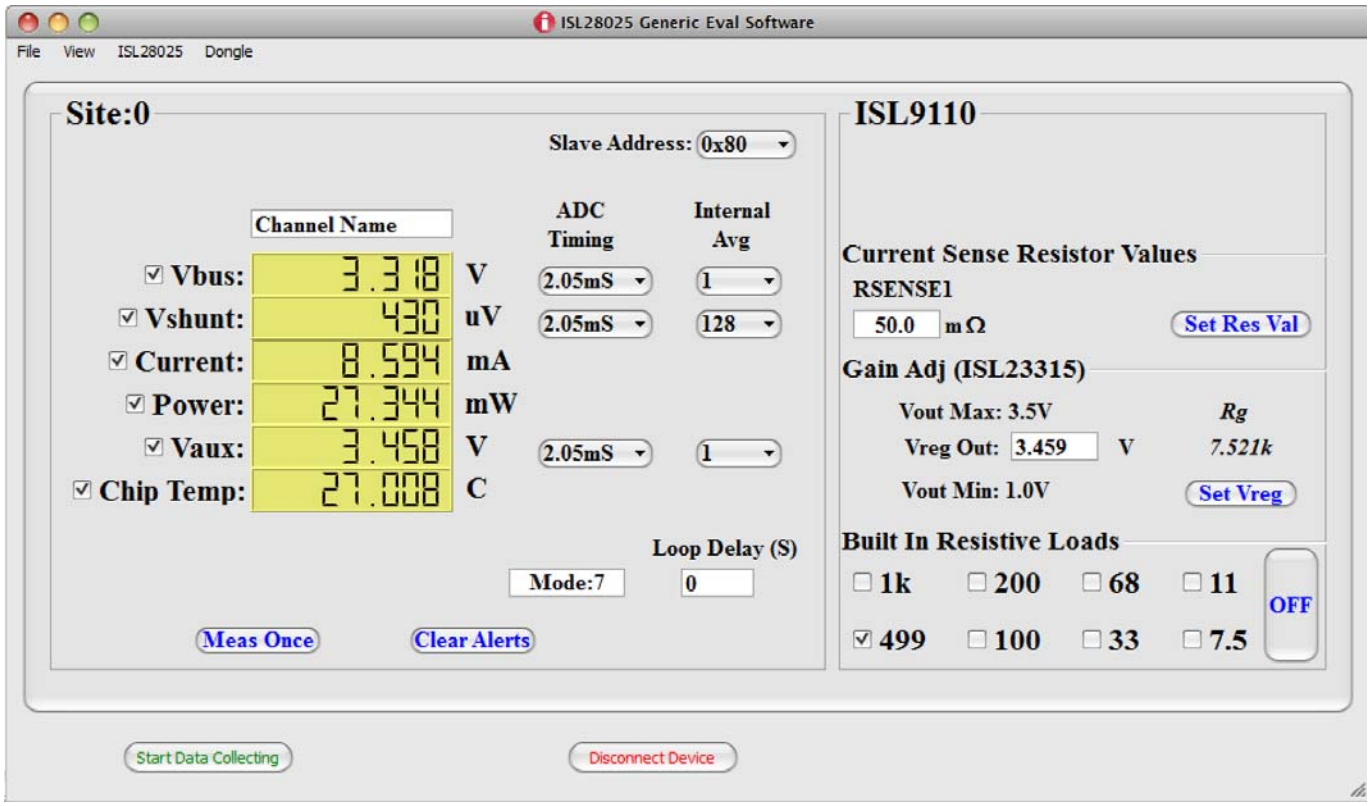

FIGURE 17. THE CONFIGURATION SCREEN FOR THE ISL28025 DEMO SOFTWARE

The screen is the same as the ISL28025 generic evaluation software plus the controls for the demo board. The Demo Controls are illustrated as the ISL9110 group box in Figure 17.

All the controls and features discussed in the ISL28025 generic board software are available to the user in the demo software.

The ISL28025 demo board connects a buck-boost regulator (ISL9110) to some resistive loads. The current going into the regulator is monitored by the Vshunt inputs (VINP, VINM) and a shunt resistor of 0.05Ω (RSENSE1). The Vaux input measures the regulated voltage at the load. The Vbus input measures the voltage applied to the input of the ISL9110. The current and power displays represent the current and power being sourced to the regulator and load.

Press the “ON” button in the lower right hand corner to turn on the ISL9110. The Vbus, Vshunt, Current, Power, Vaux channels will turn on if they are not currently active.

SETTING THE REGULATED OUTPUT VOLTAGE

Press the “Set Reg V” will control a ISL23315 digital potentiometer (DCP). The DCP is connected to the feedback resistor of the regulator, R_{14}. The DCP controls the gain of the regulator and the output voltage of the regulator. Equation 1 determines the regulated output voltage.

$$_{OUT} = 0.8 \bullet \left(1 + \frac{R_{14}}{R_{DCP}}\right) \qquad \text{(EQ. :}$$

The reference voltage for the ISL9110 is 0.8V. The value of R_{14} is 100kΩ. The value of R_{DCP} is determined by the desired regulator output voltage, V_{OUT} . By entering a voltage and pressing the Vreg button of the ISL28025 demo software, the software back calculates the value of R_{DCP} to set the output voltage to the desired value.

CHANGING THE SHUNT RESISTOR VALUES

Press the “Set Res Val” button changes the values used to calculate system current and load current as well the efficiency readings of the system.

CHANGE THE LOAD VALUES CONNECTED TO THE REGULATOR

If the jumper setting for the OUTPUT LOAD header is connected between pins 1 and 2, the output of the regulator is connected to a series of loads that are controlled by a port extender and a series of ISL83699 switches. To connect a load to the regulator, check the check box of the desired load.

Note: At light loads, the current measurements will have errors due to the temperature coefficient of the resistors. The resistors are calibrated at moderate current levels. The magnitude of current causes the resistors to heat up resulting in a shunt resistor value change. The resistors installed on the demo board are 50ppm/°C TC resistors with a power rating of 0.5W. Improving the temperature coefficient of shunt resistors or increasing the power rating of the resistors will limit the resistor change due to current.

ISL28025EVAL1Z Board Schematic

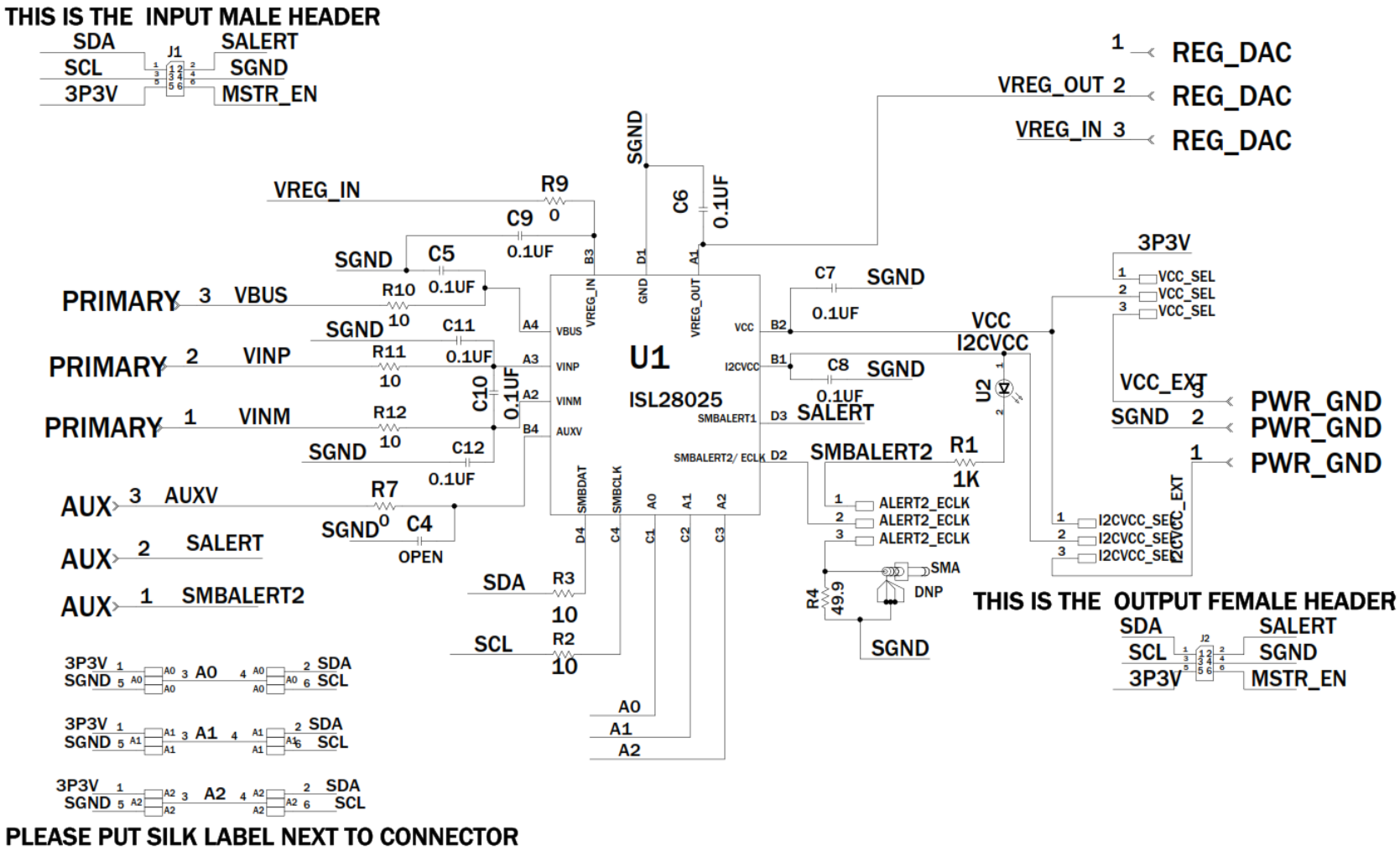

ISL28025EVAL1Z Bill of Materials

MANUFACTURER PART	QTY	UNITS	REFERENCE DESIGNATOR	DESCRIPTION	MANUFACTURER
ISL28025EVAL1ZREVAPCB	1	ea		PWB-PCB, ISL28025EVAL1Z, REVA, ROHS	IMAGINEERING INC
06035C104KAT2A	2	ea	C7, C8	CAP, SMD, 0603, 0.1µF, 50V, 10%, X7R, ROHS	AVX
C2012X7R2A104K	6	ea	C5, C6, C9, C10, C11, C12	CAP, SMD, 0805, 0.1µF, 100V, 10%, X7R, ROHS	TDK
	0	ea	C4	CAP, SMD, 0805, DNP-PLACE HOLDER, ROHS	
1725669	4	ea	AUX, PRIMARY, PWR_GND, REG_DAC	CONN-TERMINAL BLK, TH, 3POS, 2.54mm, 20-30AWG, ROHS	PHOENIX CONTACT
65474-010LF	6	ea	a) A0-PINS 5-7, A1-PINS 5-7, A2-PINS 5-7	CONN-MINI JUMPER, SHORTING, 2PIN, BLUE, ROHS	FCI/BERG
65474-010LF	0	ea	b) VCC_SEL-PINS 1-2, I2CVCC_SEL-PINS 1-2	CONN-MINI JUMPER, SHORTING, 2PIN, BLUE, ROHS	FCI/BERG
65474-010LF	0	ea	c) ALERT2_ECLK-PINS 1-2	CONN-MINI JUMPER, SHORTING, 2PIN, BLUE, ROHS	FCI/BERG
67996-272HLF	3	ea	A0, A1, A2	CONN-HEADER, 2x3, BRKAWY 2X36, 2.54mm, VERTICAL, ROHS	BERG/FCI
65474-010LF	6	ea	a) A0-PINS 1-3, A1-PINS 1-3, A2-PINS 5-3	CONN-MINI JUMPER, SHORTING, 2PIN, BLUE, ROHS	FCI/BERG
65474-010LF	0	ea	b) I2CVCC_EXT 1-2, VCC_SEL 1-2, ALERT2_ECLK 1-2	CONN-MINI JUMPER, SHORTING, 2PIN, BLUE, ROHS	FCI/BERG
68000-236HLF	3	ea	VCC_SEL, I2CVCC_SEL, ALERT2_ECLK	CONN-HEADER, 1x3, BREAKAWY 1X36, 2.54mm, ROHS	BERG/FCI
MTSW-150-22-G-D-215-RA	1	ea	J1	CONN-HEADER, 2X25, 2.54mmPITCH, R/A, 1.13x1.43in, ROHS	SAMTEC
PPPC032LJBN-RC	1	ea	J2	CONN-SOCKET, TH, 6P, 2X3, INSULATED, R/A, 2.54mm, ROHS	SULLINS
CMD17-21VYD/TR8	1	ea	D1	LED, SMD, 0805, YELLOW/DIFF., 2V, 20mA, 4mcd, 585nm, ROHS	CHICAGO MINIATURE
ISL28025FI60Z-T	1	ea	U1	IC-60V DIGITAL POWER MONITOR, 16-BALL WLCSP, ROHS	INTERSIL
ERA-6AEB102V	1	ea	R1	RES, SMD, 0805, 1k, 1/8W, 0.1%, MF, ROHS	PANASONIC
CR0603-10W-000T	2	ea	R7, R9	RES, SMD, 0603, 0Ω, 1/10W, TF, ROHS	VENKEL
CR0805-8W-10R0FT	5	ea	R2, R3, R10, R11, R12	RES, SMD, 0805, 10Ω, 1/8W, 1%, TF, ROHS	VENKEL
MCR10EZHF49R9	1	ea	R4	RES, SMD, 0805, 49.9Ω, 1/8W, 1%, TF, ROHS	ROHM
S-2261	1	ea	Place assy in bag	BAG, STATIC, 4X6, ZIPLOC, ROHS	ULINE
LABEL-DATE CODE	1	ea	AFFIX TO BACK OF PCB	LABEL-DATE CODE_LINE 1: YRWK/REV#, LINE 2: BOM NAME	INTERSIL

ISL28025EVAL2Z Board Schematic

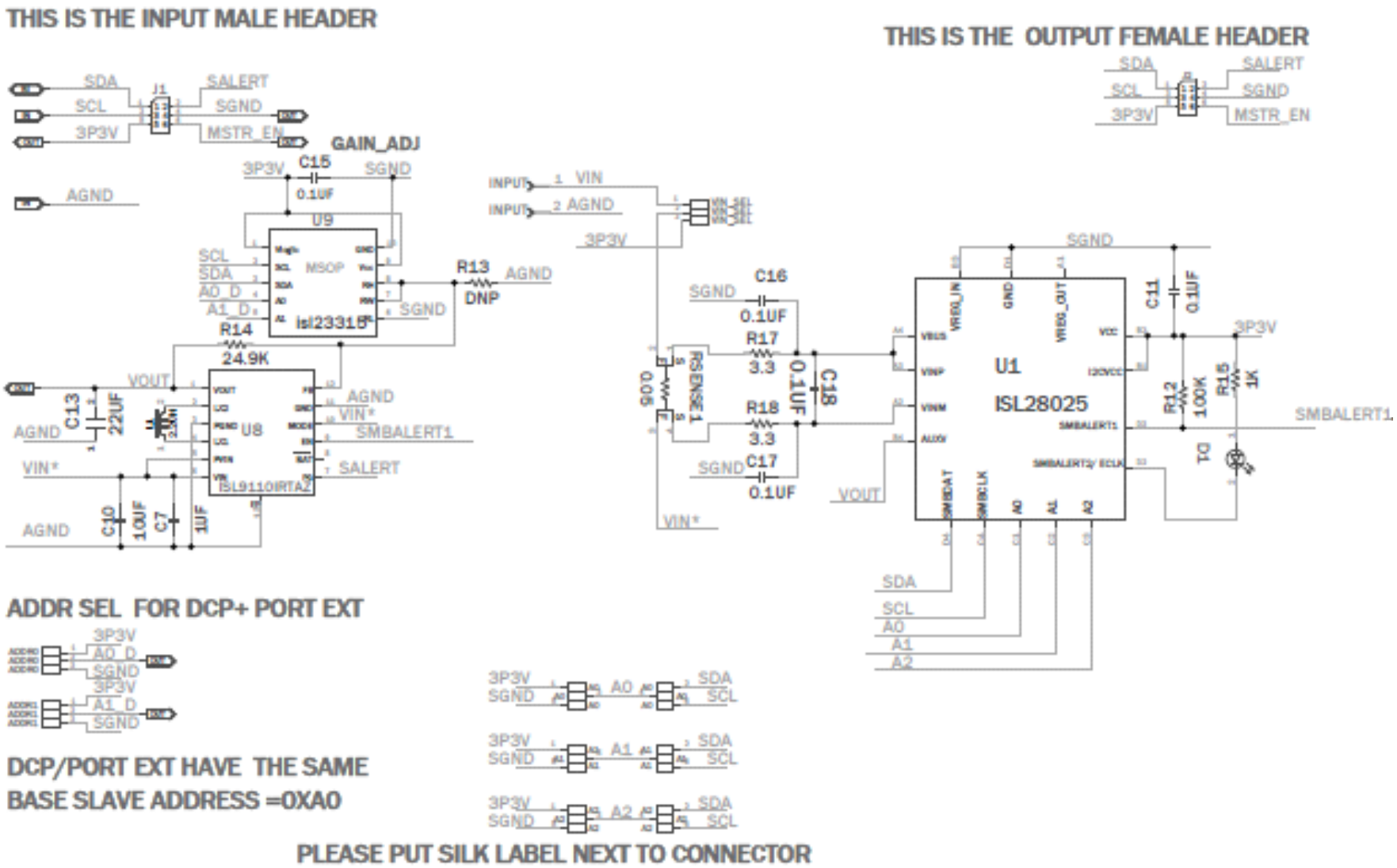

FIGURE 18. ISL28025EVAL2Z SCHEMATIC PAGE 1

ISL28025EVAL2Z Board Schematic (Continued)

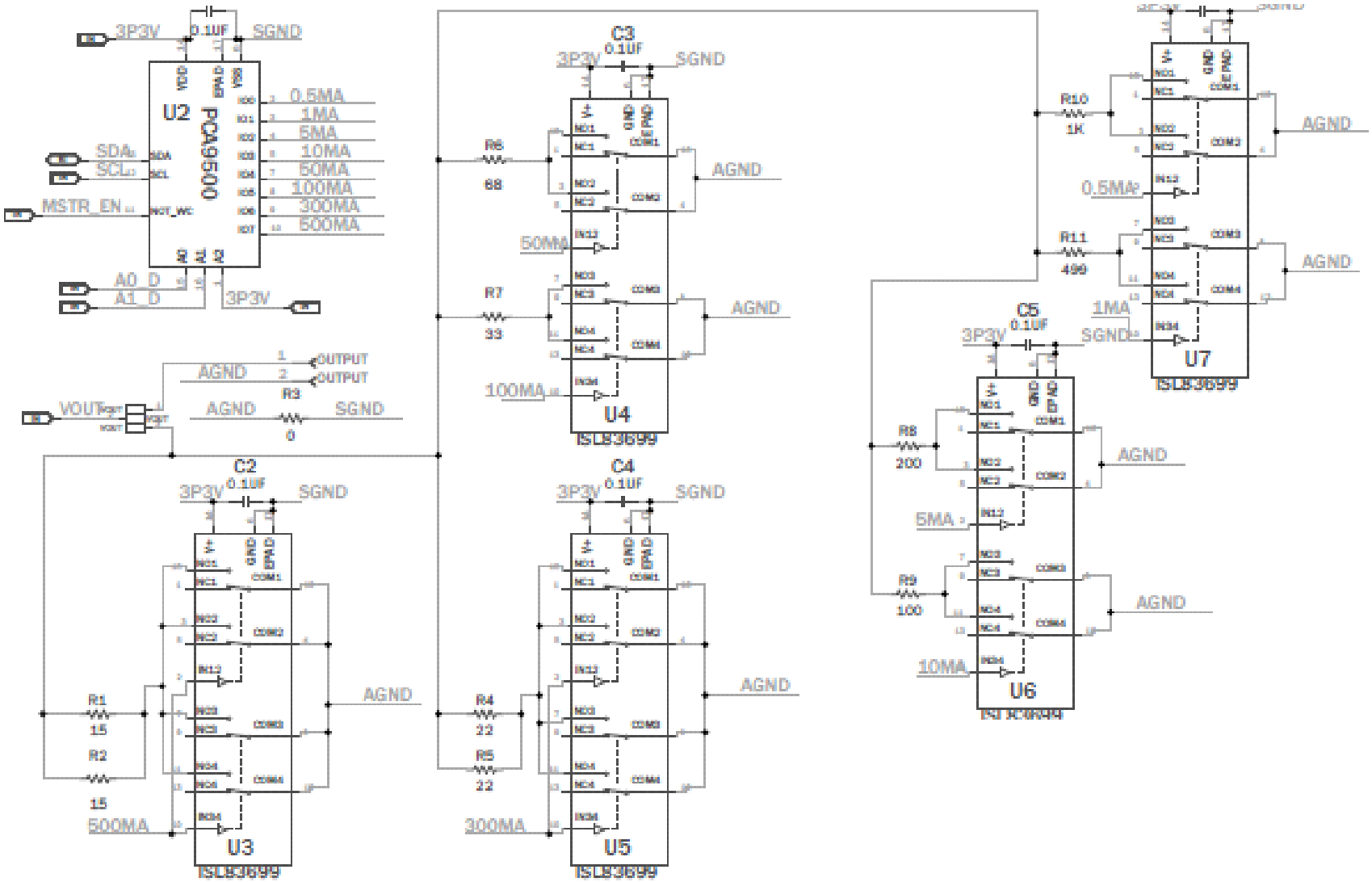

FIGURE 19. ISL28025EVAL2Z SCHEMATIC PAGE 2

ISL28025EVAL2Z Bill of Materials

MANUFACTURER PART	QTY	UNITS	REFERENCE DESIGNATOR	DESCRIPTION	MANUFACTURER
ISL28025EVAL2ZREVAPCB	1	ea		PWB-PCB, ISL28025EVAL2Z, REVA, ROHS	IMAGINEERING INC
06035C104KAT2A	11	ea	C1-C6, C11, C15, C16, C17, C18	CAP, SMD, 0603, 0.1µF, 50V, 10%, X7R, ROHS	AVX
GRM188R61C105KA12D	1	ea	C7	CAP, SMD, 0603, 1µF, 16V, 10%, X5R, ROHS	MURATA
C1608X5R0J226M080AC	1	ea	C13	CAP, SMD, 0603, 22µF, 6.3V, 20%, X5R, ROHS	TDK/Digikey
TMK316B7106KL-TD	1	ea	C10	CAP, SMD, 1206, 10µF, 25V, 10%, X7R, ROHS	TAIYO YUDEN
NRS5020T2R2NMG	1	ea	L1	COIL-PWR INDUCTOR, SMD, 4.8mm, 22µH, 20%, 1.1A, ROHS	DigiKey/Taiyo Yuden
1725656	2	ea	INPUT, OUTPUT	CONN-TERMINAL BLK, TH, 2P, 6A, 125V, 20-30AWG, 2.54mm, ROHS	PHOENIX CONTACT
67996-272HLF	3	ea	A0, A1, A2	CONN-HEADER, 2x3, BRKAWY 2X36, 2.54mm, VERTICAL, ROHS	BERG/FCI
68000-236HLF	4	ea	VOUT, ADDR0, ADDR1, VIN_SEL	CONN-HEADER, 1x3, BREAKAWY 1X36, 2.54mm, ROHS	BERG/FCI
65474-010LF	7	ea	a) A0-PINS 1-3, A1-PINS 1-3, A2-PINS 1-3	CONN-MINI JUMPER, SHORTING, 2PIN, BLUE, ROHS	FCI/BERG
65474-010LF	0	ea	b) IADDR0 2-3, ADDR1 2-3, VIN_SEL 1-2, OUTPUT_LOAD 2-3	CONN-MINI JUMPER, SHORTING, 2PIN, BLUE, ROHS	FCI/BERG
MTSW-150-22-G-D-215-RA	1	ea	J1	CONN-HEADER, 2X25, 2.54mm PITCH, R/A, 1.13x1.43in, ROHS	SAMTEC
PPPC032LJBN-RC	1	ea	J2	CONN-SOCKET, TH, 6P, 2X3, INSULATED, R/A, 2.54mm, ROHS	SULLINS
597-3111-407F	1	ea	D1	LED, SMD, 1206, RED, 30mA, 60mW, 17mcd, ROHS	DIALIGHT
ISL23315TFUZ-T7A	1	ea	U9	IC-LOW VOLT. DIGITAL POTENTIOMETER, 10P, MSOP, ROHS	INTERSIL
ISL28025FI60Z-T	1	ea	U1	IC-60V DIGITAL POWER MONITOR, 16-BALL WLCSP, ROHS	INTERSIL
ISL83699IRZ	5	ea	U3, U4, U5, U6, U7	IC-QUAD SPDT ANALOG SWITCH, 16P, QFN, ROHS	INTERSIL
ISL9110IRTAZ	1	ea	U8	IC-ADJ., 1.2A BUCK-BOOST REGULATOR, 12P, TDFN, 3X3, ROHS	INTERSIL
PCA9500BS,118	1	ea	U2	IC-8-BIT I2C I/O EXPANDER, 16P, HVQFN, 4X4, ROHS	NXP SEMICONDUCTOR
	0	ea	R13	RESISTOR, SMD, 0603, 0.1%, MF, DNP-PLACE HOLDER	
CR0402-16W-102JT	1	ea	R15	RES, SMD, 0402, 1k, 1/16W, 1%, TF, ROHS	VENKEL
ERJ2RKF1003	1	ea	R12	RES, SMD, 0402, 100k, 1/16W, 1%, TF, ROHS	PANASONIC
?	1	ea	R14	RES, SMD, 0402, 24.9k, 1/16W, 1%, TF, ROHS	PANASONIC
?	2	ea	R17, R18	RES, SMD, 0603, 3.3Ω, 1/10W, 1%, TF, ROHS	VENKEL
?	1	ea	R11	RES, SMD, 0805, 499Ω, 1/8W, 1%, TF, ROHS	PANASONIC
?	1	ea	R8	RES, SMD, 0805, 200Ω, 1/8W, 1%, TF, ROHS	PANASONIC
ERJ-6ENF6981V	1	ea	R10	RES, SMD, 0805, 1k, 1/8W, 1%, TF, ROHS	PANASONIC
CRCW1206-000Z	1	ea	R3	RES, SMD, 1206, 0Ω, 1/4W, TF, ROHS	VISHAY
?	1	ea	R9	RES, SMD, 1206, 100Ω, 1/4W, 1%, TF, ROHS	YAGEO
CRCW251215R0FKEG	2	ea	R1, R2	RES, SMD, 2512, 15Ω, 1W, 1%, TF, ROHS	VISHAY/DALE
CR2512-1W-220JT	2	ea	R4, R5	RES, SMD, 2512, 22Ω, 1W, 5%, TF, ROHS	VENKEL
MCR50JZHJ330	1	ea	R7	RES, SMD, 2010, 33Ω, 1/2W, 5%, TF, ROHS	ROHM

ISL28025EVAL2Z Bill of Materials (Continued)

MANUFACTURER PART	QTY	UNITS	REFERENCE DESIGNATOR	DESCRIPTION	MANUFACTURER
MCR50JZHJ680	1	ea	R6	RES, SMD, 2010, 68Ω, 1/2W, 5%, TF, ROHS	ROHM
LVK12R050DER	1	ea	RSENSE1	RES-CURR.SENSE, SMD, 1206, 0.05Ω, 1/2W, 0.5%, 50ppm, ROHS	OHMITE
	0	ea	Four corners	DNP! SCREW, 4-40X1/4in, PAN, SS, PHILLIPS	
2204 (.250 OD)	0	ea	Four corners	DNP! STANDOFF, 4-40X3/4in, F/F, HEX, ALUMINUM, ROHS	KEYSTONE
S-2261	1	ea	Place assy in bag	BAG, STATIC, 4X6, ZIPLOC, ROHS	ULINE
LABEL-DATE CODE	1	ea	AFFIX TO BACK OF PCB	LABEL-DATE CODE_LINE 1: YRWK/REV#, LINE 2: BOM NAME	INTERSIL

ISLUSBPWRDONGLE1Z Schematics

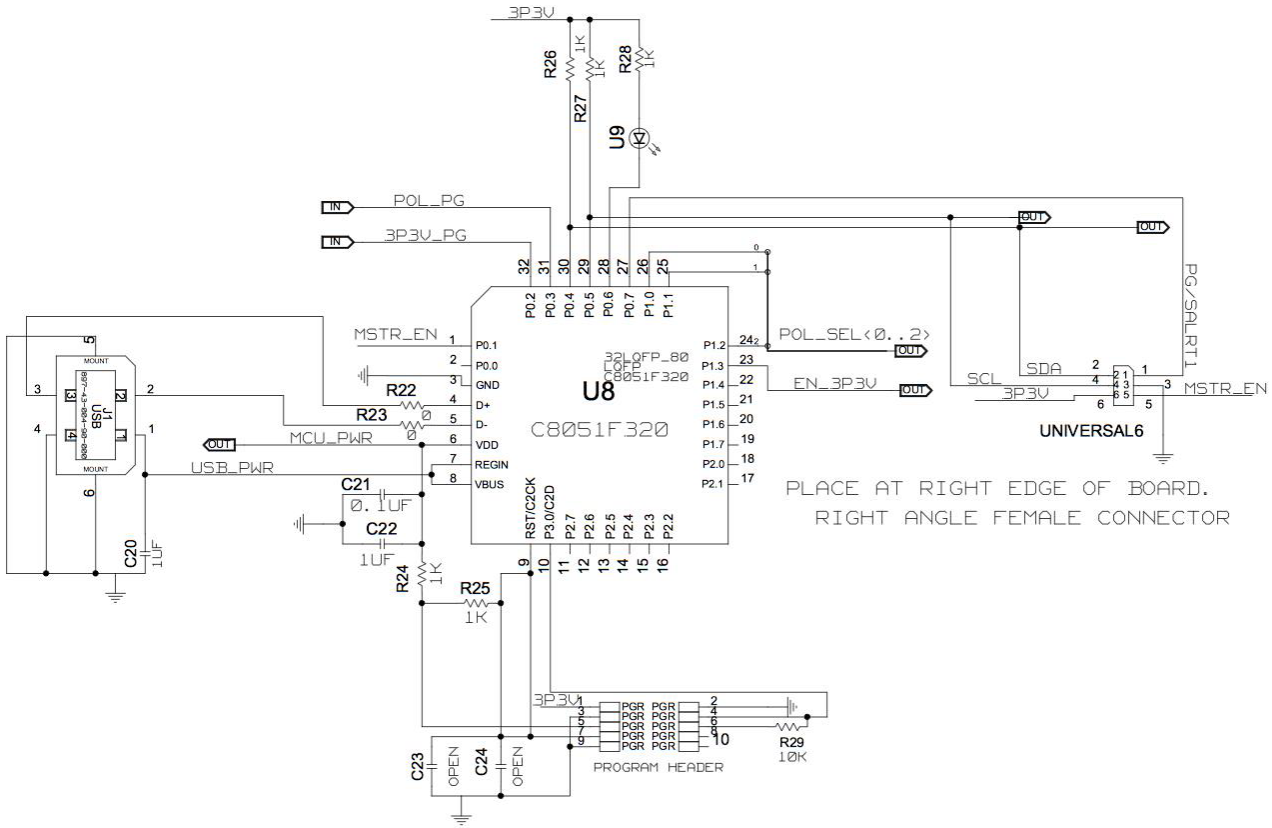

FIGURE 20. ISLUSBPWRDONGLE1Z SCHEMATIC (1 OF 2)

ISLUSBPWRDONGLE1Z Schematics (Continued)

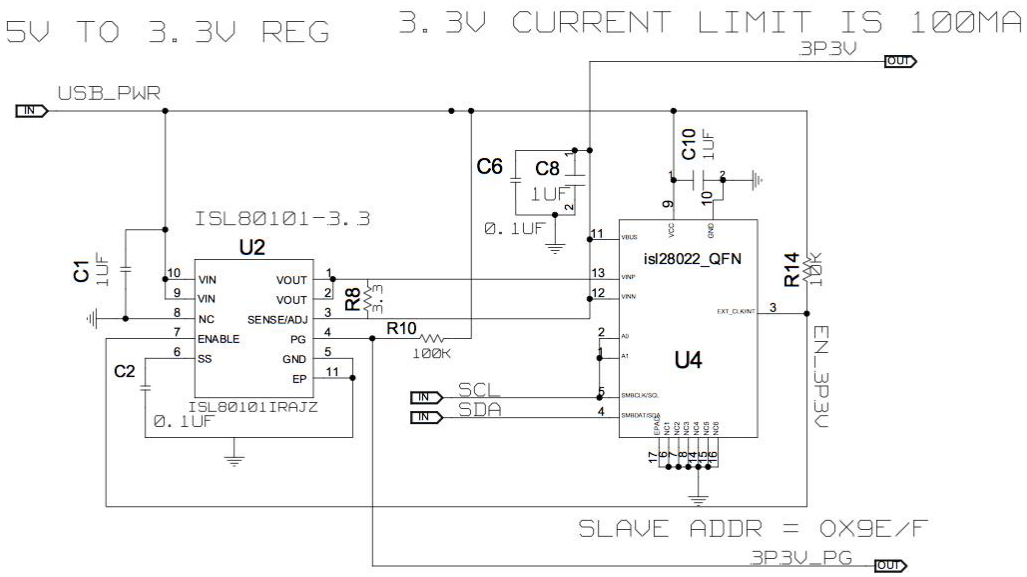

FIGURE 21. ISLUSBPWRDONGLE1Z SCHEMATIC (2 OF 2)

ISLUSBPWRDONGLE1Z Bill of Materials

MANUFACTURER PART NUMBER	QTY	UNITS	REFERENCE DESIGNATOR	DESCRIPTION	MANUFACTURER
C2012X7R1E105K	5	ea	C1, C8, C10, C20, C22	CAP, SMD, 0805, 1.0µF, 25V, 10%, X7R, ROHS	TDK
ECJ-2VB1E104K	3	ea	C2, C6, C21	CAP, SMD, 0805, 0.1µF, 25V, 10%, X7R, ROHS	PANASONIC
67996-272HLF	1	ea	PGR	CONN-HEADER, 2X5, BRKAWY-2X36, 2.54mm, ROHS	BERG/FCI
897-43-004-90-000	1	ea	J1	CONN-USB TYPE B, RECEPTACLE, PCB MOUNT, ROHS	MILL-MAX
SSQ-103-02-T-D-RA	1	ea	UNIVERSAL6	CONN-SOCKET STRIP, TH, 2X3, 2.54mm, TIN, R/A, ROHS	SAMTEC
CMD17-21VGC/TR8	1	ea	U9	LED, SMD, 0805, GREEN, CLEAR, 10mcd, 2.1V, 20mA, 570nm, ROHS	CHICAGO MINIATURE
C8051F320-GQ	1	ea	U8	IC-USB MICROCONTROLLER, 32P, LQFP, 8-BIT, 25MIPS, ROHS	SILICON LABORATORIES
ISL28022FRZ	1	ea	U4	IC-DIGITAL POWER MONITOR, 16P, QFN, ROHS	INTERSIL
ISL80101IR33Z	1	ea	U2	IC-3.3V, 1A LDO REGULATOR, 10P, DFN, 3X3, ROHS	INTERSIL
CR0603-10W-000T	2	ea	R22, R23	RES, SMD, 0603, 0Ω, 1/10W, TF, ROHS	VENKEL
ERJ-3EKF1001V	2	ea	R24, R25	RES, SMD, 0603, 1k, 1/10W, 1%, TF, ROHS	PANASONIC
RK73H1JT1002F	2	ea	R14, R29	RES, SMD, 0603, 10k, 1/10W, 1%, TF, ROHS	KOA
CR0603-10W-1003FT	1	ea	R10	RES, SMD, 0603, 100k, 1/10W, 1%, TF, ROHS	VENKEL
ERJ-6RQF3R3V	1	ea	R8	RES, SMD, 0805, 3.3Ω, 1/8W, 1%, TF, ROHS	PANASONIC
CR0805-8W-1001FT	3	ea	R26, R27, R28	RES, SMD, 0805, 1k, 1/8W, 1%, TF, ROHS	VENKEL
	0	ea	C23, C24	DO NOT POPULATE OR PURCHASE	

Notice

1. Descriptions of circuits, software and other related information in this document are provided only to illustrate the operation of semiconductor products and application examples. You are fully responsible for the incorporation or any other use of the circuits, software, and information in the design of your product or system. Renesas Electronics disclaims any and all liability for any losses and damages incurred by you or third parties arising from the use of these circuits, software, or information.
2. Renesas Electronics hereby expressly disclaims any warranties against and liability for infringement or any other claims involving patents, copyrights, or other intellectual property rights of third parties, by or arising from the use of Renesas Electronics products or technical information described in this document, including but not limited to, the product data, drawings, charts, programs, algorithms, and application examples.
3. No license, express, implied or otherwise, is granted hereby under any patents, copyrights or other intellectual property rights of Renesas Electronics or others.
4. You shall not alter, modify, copy, or reverse engineer any Renesas Electronics product, whether in whole or in part. Renesas Electronics disclaims any and all liability for any losses or damages incurred by you or third parties arising from such alteration, modification, copying or reverse engineering.
5. Renesas Electronics products are classified according to the following two quality grades: “Standard” and “High Quality”. The intended applications for each Renesas Electronics product depends on the product’s quality grade, as indicated below.
   "Standard": Computers; office equipment; communications equipment; test and measurement equipment; audio and visual equipment; home electronic appliances; machine tools; personal electronic equipment; industrial robots; etc.
   "High Quality": Transportation equipment (automobiles, trains, ships, etc.); traffic control (traffic lights); large-scale communication equipment; key financial terminal systems; safety control equipment; etc.
   Unless expressly designated as a high reliability product or a product for harsh environments in a Renesas Electronics data sheet or other Renesas Electronics document, Renesas Electronics products are not intended or authorized for use in products or systems that may pose a direct threat to human life or bodily injury (artificial life support devices or systems; surgical implantations; etc.), or may cause serious property damage (space system; undersea repeaters; nuclear power control systems; aircraft control systems; key plant systems; military equipment; etc.). Renesas Electronics disclaims any and all liability for any damages or losses incurred by you or any third parties arising from the use of any Renesas Electronics product that is inconsistent with any Renesas Electronics data sheet, user’s manual or other Renesas Electronics document.
6. When using Renesas Electronics products, refer to the latest product information (data sheets, user’s manuals, application notes, “General Notes for Handling and Using Semiconductor Devices” in the reliability handbook, etc.), and ensure that usage conditions are within the ranges specified by Renesas Electronics with respect to maximum ratings, operating power supply voltage range, heat dissipation characteristics, installation, etc. Renesas Electronics disclaims any and all liability for any malfunctions, failure or accident arising out of the use of Renesas Electronics products outside of such specified ranges.
7. Although Renesas Electronics endeavors to improve the quality and reliability of Renesas Electronics products, semiconductor products have specific characteristics, such as the occurrence of failure at a certain rate and malfunctions under certain use conditions. Unless designated as a high reliability product or a product for harsh environments in a Renesas Electronics data sheet or other Renesas Electronics document, Renesas Electronics products are not subject to radiation resistance design. You are responsible for implementing safety measures to guard against the possibility of bodily injury, injury or damage caused by fire, and/or danger to the public in the event of a failure or malfunction of Renesas Electronics products, such as safety design for hardware and software, including but not limited to redundancy, fire control and malfunction prevention, appropriate treatment for aging degradation or any other appropriate measures. Because the evaluation of microcomputer software alone is very difficult and impractical, you are responsible for evaluating the safety of the final products or systems manufactured by you.
8. Please contact a Renesas Electronics sales office for details as to environmental matters such as the environmental compatibility of each Renesas Electronics product. You are responsible for carefully and sufficiently investigating applicable laws and regulations that regulate the inclusion or use of controlled substances, including without limitation, the EU RoHS Directive, and using Renesas Electronics products in compliance with all these applicable laws and regulations. Renesas Electronics disclaims any and all liability for damages or losses occurring as a result of your noncompliance with applicable laws and regulations.
9. Renesas Electronics products and technologies shall not be used for or incorporated into any products or systems whose manufacture, use, or sale is prohibited under any applicable domestic or foreign laws or regulations. You shall comply with any applicable export control laws and regulations promulgated and administered by the governments of any countries asserting jurisdiction over the parties or transactions.
10. It is the responsibility of the buyer or distributor of Renesas Electronics products, or any other party who distributes, disposes of, or otherwise sells or transfers the product to a third party, to notify such third party in advance of the contents and conditions set forth in this document.
11. This document shall not be reprinted, reproduced or duplicated in any form, in whole or in part, without prior written consent of Renesas Electronics.
12. Please contact a Renesas Electronics sales office if you have any questions regarding the information contained in this document or Renesas Electronics products.

(Note 1) “Renesas Electronics” as used in this document means Renesas Electronics Corporation and also includes its directly or indirectly controlled subsidiaries.

(Note 2) “Renesas Electronics product(s)” means any product developed or manufactured by or for Renesas Electronics.

(Rev.4.0-1 November 2017)

SALES OFFICES Renesas Electronics Corporation http://www.renesas.com

Refer to "http://www.renesas.com/" for the latest and detailed information.

Renesas Electronics America Inc.
1001 Murphy Ranch Road, Milpitas, CA 95035, U.S.A.
Tel: +1-408-432-8888, Fax: +1-408-434-5351

Renesas Electronics Canada Limited
9251 Yonge Street, Suite 8309 Richmond Hill, Ontario Canada L4C 9T3
Tel: +1-905-237-2004

Renesas Electronics Europe Limited
Dukes Meadow, Millboard Road, Bourne End, Buckinghamshire, SL8 5FH, U.K
Tel: +44-1628-651-700, Fax: +44-1628-651-804

Renesas Electronics Europe GmbH
Arcadiastrasse 10, 40472 Düsseldorf, Germany
Tel: +49-211-6503-0, Fax: +49-211-6503-1327

Renesas Electronics (China) Co., Ltd.
Room 1709 Quantum Plaza, No.27 ZhichunLu, Haidian District, Beijing, 100191 P. R. China
Tel: +86-10-8235-1155, Fax: +86-10-8235-7679

Renesas Electronics (Shanghai) Co., Ltd.
Unit 301, Tower A, Central Towers, 555 Langao Road, Putuo District, Shanghai, 200333 P. R. China
Tel: +86-21-2226-0888, Fax: +86-21-2226-0999

Renesas Electronics Hong Kong Limited
Unit 1601-1611, 16/F., Tower 2, Grand Century Place, 193 Prince Edward Road West, Mongkok, Kowloon, Hong Kong
Tel: +852-2265-6688, Fax: +852 2886-9022

Renesas Electronics Taiwan Co., Ltd.
13F, No. 363, Fu Shing North Road, Taipei 10543, Taiwan
Tel: +886-2-8175-9600, Fax: +886 2-8175-9670

Renesas Electronics Singapore Pte. Ltd.
80 Bendemeer Road, Unit #06-02 Hyflux Innovation Centre, Singapore 339949
Tel: +65-6213-0200, Fax: +65-6213-0300

Renesas Electronics Malaysia Sdn.Bhd.
Unit 1207, Block B, Menara Amcorp, Amcorp Trade Centre, No. 18, Jln Persiaran Barat, 46050 Petaling Jaya, Selangor Darul Ehsan, Malaysia
Tel: +60-3-7955-9390, Fax: +60-3-7955-9510

Renesas Electronics India Pvt. Ltd.
No.777C, 100 Feet Road, HAL 2nd Stage, Indiranagar, Bangalore 560 038, India
Tel: +91-80-67208700, Fax: +91-80-67208777

Renesas Electronics Korea Co., Ltd.
17F, KAMCO Yangjae Tower, 262, Gangnam-daero, Gangnam-gu, Seoul, 06265 Korea
Tel: +82-2-558-3737, Fax: +82-2-558-5338

© 2018 Renesas Electronics Corporation. All rights reserved.

Colophon 7.0