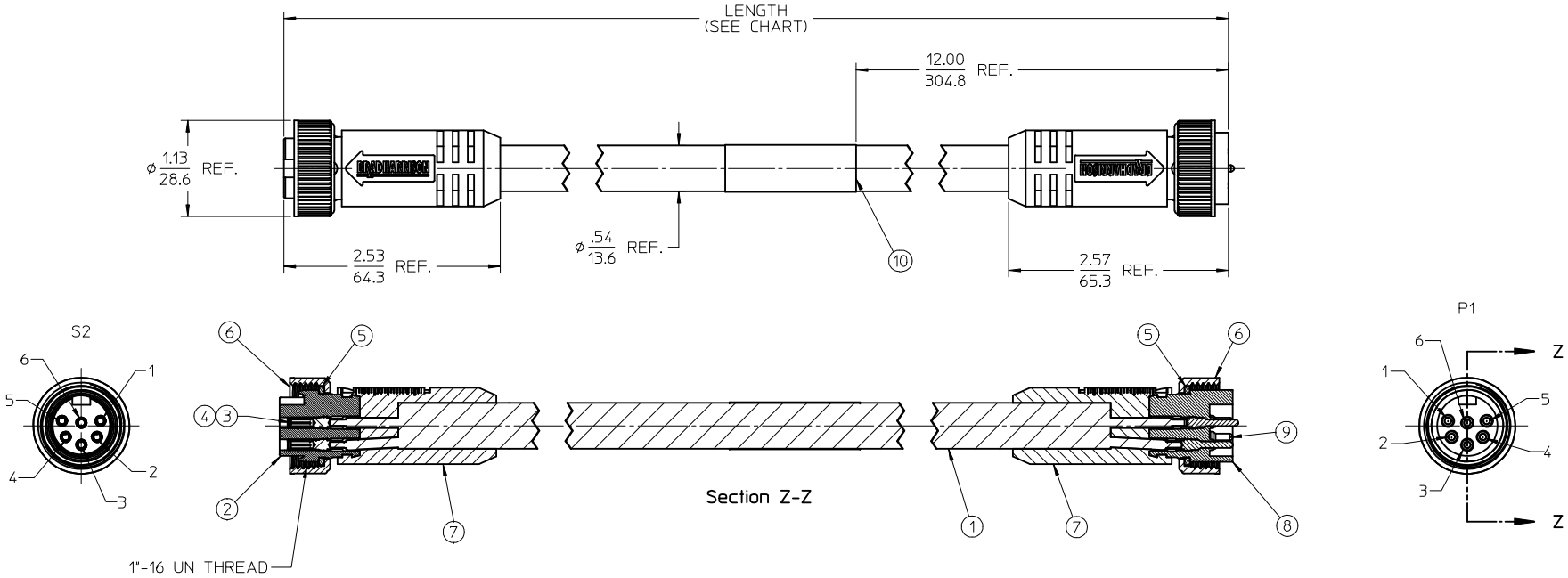

PART NUMBER	ENGINEERING NO.	LENGTH
1300110008	226020A01F030	3' 0" +1.75 - 0 [.9M +44.5 - 0]
1300110010	226020A01F060	6' 0" +2.19 - 0 [1.8M +55.6 - 0]
1300110013	226020A01F090	9' 0" +3.50 - 0 [2.7M +88.9 - 0]
1300110016	226020A01F120	12' 0" +3.50 - 0 [3.7M +88.9 - 0]
1300110018	226020A01F150	15' 0" +6.50 - 0 [4.6M +165.1 - 0]
1300110019	226020A01F200	20' 0" +6.50 - 0 [6.1M +165.1 - 0]
1300110022	226020A01F250	25' 0" +12.50 - 0 [7.6M +317.5 - 0]
1300110023	226020A01F300	30' 0" +12.50 - 0 [9.1M +317.5 - 0]
1300110025	226020A01F350	35' 0" +12.50 - 0 [10.7M +317.5 - 0]
1300110026	226020A01F400	40' 0" +12.50 - 0 [12.2M +317.5 - 0]
1300110028	226020A01F500	50' 0" +24.50 - 0 [15.2M +622.3 - 0]
1300110029	226020A01F650	65' 0" +24.50 - 0 [19.8M +622.3 - 0]
1300110031	226020A01F750	75' 0" +24.50 - 0 [22.9M +622.3 - 0]

NOTES:
1. MATERIAL: SEE TABLE
2. FINISHES: SEE TABLE
3. CABLE ASSEMBLIES ARE BAGGED SEPERATELY IN POLY BAGS WITH BARCODE LABEL ATTACHED TO OUTSIDE OF BAG
4. WRAP LABEL IS MARKED WITH P/N, DATE CODE VOLTAGE & AMPERAGE
5. MATES WITH: MINI CHANGE, C-SIZE 6 POLE RECEPTACLE
6. ELECTRICAL SPECIFICATIONS:
   VOLTAGE RATING: 600V
   CURRENT RATING: 8 AMPS
7. ASSEMBLY IS RoHS COMPLIANT

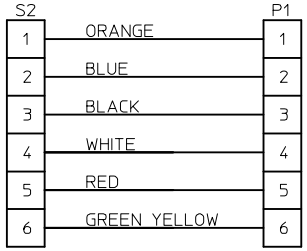

WIRING DIAGRAM

ITEM	QTY.	DESCRIPTION	MATERIAL	FINISH
10	1	LABEL	PLASTIC FILM	BLACK/YELLOW
9	6	PIN CONTACT	BRASS	GOLD PLATED
8	1	INSERT, MALE, 6 POLE	PVC	YELLOW
7	2	OVERMOLD	PVC	YELLOW
6	2	COUPLING NUT	ZINC DIE CAST	BLACK
5	2	FRICTION RING	NYLON	NATURAL
4	6	SOCKET CONTACT	BRASS	GOLD PLATED
3	6	SOCKET SLEEVE	STAINLESS STEEL	
2	1	INSERT, FEMALE, 6 POLE	PVC	YELLOW
1	1	CABLE, 16-6 STOOW/ST	PVC JACKET	YELLOW

RELEASED
EC NO: WNA2009-0627 2009/04/03
DRWN:RSTONE
CHKD:B.WOODMAN 2009/04/08
APPR: JFMURPHY
DESCRIPTION
A
REV

QUALITY SYMBOLS
▼=0
Ⓒ=0

GENERAL TOLERANCES (UNLESS SPECIFIED)

	mm	INCH
4 PLACES	± ---	± ---
3 PLACES	± ---	± ---
2 PLACES	± ---	± .01
1 PLACE	± 0.3	± ---
ANGULAR ±1/2°		

DRAFT WHERE APPLICABLE MUST REMAIN WITHIN DIMENSIONS

DIMENSION STYLE: IN/MM
SCALE: 1:1
DESIGN UNITS: INCH
THIRD ANGLE PROJECTION

DRAWN BY	R.STONE	DATE 2009/04/02
CHECKED BY	B.WOODMAN	DATE 2009/04/03
APPROVED BY	J.MURPHY	DATE 2008/04/06

TITLE: MINI-CHANGE CORD ASSY MALE/FEMALE, B-SIZE 6 POLE

molex MOLEX INCORPORATED

MATERIAL NO.: SEE CHART
DOCUMENT NO.: SD-130011-001
SHEET NO.: 1 OF 1
SIZE: C

THIS DRAWING CONTAINS INFORMATION THAT IS PROPRIETARY TO MOLEX INCORPORATED AND SHOULD NOT BE USED WITHOUT WRITTEN PERMISSION

FACE VIEW-FEMALE INSERT			FACE VIEW-MALE INSERT		
1 ORANGE 2 BLUE 3 BLACK 4 WHITE 5 RED 6 GREEN/YELLOW	1 WHITE/BLACK 2 BLACK 3 WHITE 4 RED 5 ORANGE 6 BLUE 7 GREEN/YELLOW	1 ORANGE 2 BLUE 3 WHITE/BLACK 4 BLACK 5 WHITE 6 RED 7 GREEN/YELLOW 8 RED/BLACK	1 ORANGE 2 BLUE 3 BLACK 4 WHITE 5 RED 6 GREEN/YELLOW	1 WHITE/BLACK 2 BLACK 3 WHITE 4 RED 5 ORANGE 6 BLUE 7 GREEN/YELLOW	1 ORANGE 2 BLUE 3 WHITE/BLACK 4 BLACK 5 WHITE 6 RED 7 GREEN/YELLOW 8 RED/BLACK

	PART NO	ENGINEERING NO.	FINISHED LENGTH
	1300110008	226020A01F030	3FT [0.9M]
B	1300110082	227020A01M300	30M [98FT 5 IN]
	1300110158	228020A01M600	60M [196FT 10 IN]

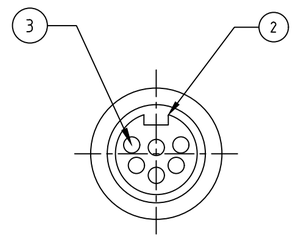

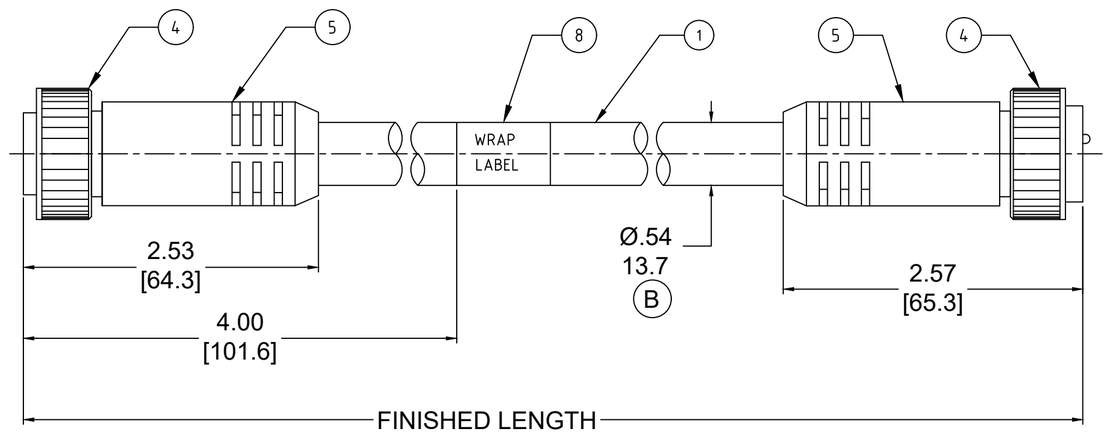

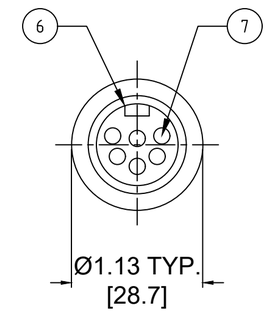

NOTES:

1. MATERIAL: AS NOTED
2. FINISH: AS NOTED
3. ELECTRICAL:
   6 POLE: VOLTAGE: 400V PER IEC60664
   600V PER UL2238
   CURRENT: 8A
   7 POLE: VOLTAGE: 320V PER IEC60664
   600V PER UL2238
   CURRENT: 8A
   8 POLE: VOLTAGE: 320V PER IEC60664
   600V PER UL2238
   CURRENT: 7A
4. TEMP RATING: -20°TO +105°C
5. PROTECTION: IP67 (WHEN MATED)
6. COUPLING THREAD: 1"-16 UN
7. UL RECOGNIZED FILE: E152210
   CSA CERTIFIED FILE: LR6837 (B)
8. ALL DIMENSIONS ARE FOR REFERENCE UNLESS TOLERANCED OR NOTED OTHERWISE

PART NO. MATRIX

227020A01M010

POLES (6,7,8)

FINISHED LENGTH:
M005= 0.5 METER
M010= 1 METER
M100= 10 METER

F010= 1 FOOT
F100= 10 FEET

CABLE LENGTH TOLERANCES
>.3M [1FT]: +19mm-0 [+.75in-0]
.3 - .9M [1 - 3FT]: +44.5mm-0 [+1.75in-0]
.9 - 1.8M [3 - 6FT]: +55.6mm-0 [+2.19in-0]
1.8 - 3.7M [6 - 12FT: +88.9mm-0 [+3.50in-0]
3.7 - 7.3M [12 - 24FT]: +165.1mm-0 [+6.50in-0]
7.3-14.6M [24 - 48FT]: +317.5mm-0 [+12.50in-0]
14.6 - 30.5M [48-100FT]: +622.3mm-0 [+24.50in-0]
OVER 30M [100FT] +2% OF FINISHED LENGTH

ITEM	DESCRIPTION	MATERIAL	FINISH	
8	WRAP LABEL	VINYL	BLACK/YELLOW	
7	CONTACT PIN	COPPER ALLOY	GOLD PLATED	
6	MALE INSERT	TPE	YELLOW	B
5	OVERMOLD	TPE	YELLOW	B
4	COUPLING	ZINC DIE-CAST	BLACK	
3	CONTACT SOCKET	COPPER ALLOY	GOLD PLATED	
2	FEMALE INSERT	TPE	YELLOW	B
1	CABLE, 16AWG, TPE,STOOW	PVC JACKET	YELLOW	

THIS DRAWING CONTAINS INFORMATION THAT IS PROPRIETARY TO MOLEX ELECTRONIC TECHNOLOGIES, LLC AND SHOULD NOT BE USED WITHOUT WRITTEN PERMISSION

FUNCTIONAL SYMBOLS: FA=0, FC=0, FP=0
DIVISIONAL SYMBOLS

DIMENSION UNITS: INCH/MM
SCALE: NTS

GENERAL TOLERANCES (UNLESS SPECIFIED)

	mm	INCH
4 PLACES	±----	±----
3 PLACES	±----	±----
2 PLACES	±----	±----
1 PLACE	±----	±----
0 PLACES	±----	±----
ANGULAR TOL ± 0.5 °		

DRAFT WHERE APPLICABLE MUST REMAIN WITHIN DIMENSIONS

CURRENT REV DESC: ITEM# 2, 5 & 6 WERE PVC. ADDED "CSA" IN NOTES. ADDED CABLE DIA. MODIFIED MATERIAL TABLE

EC NO: 643513
DRWN: ABENJAMINLW 2020/07/29
CHK'D: RSTONE 2020/08/28
APPR: BWOODMAN 2020/09/15

INITIAL REVISION:
DRWN: RSTONE 2016/11/30
APPR: BWOODMAN 2016/12/20

THIRD ANGLE PROJECTION | DRAWING: C-SIZE | SERIES: 139990

molex

MINI-CHANGE CORDSET, B-SIZE,
6-8 POLE, MALE-FEMALE, STRAIGHT, SINGLE KEY, 16 AWG

PRODUCT CUSTOMER DRAWING

DOCUMENT NUMBER	DOC TYPE	DOC PART	REVISION
SD-130011-006	PSD	001	B

MATERIAL NUMBER	CUSTOMER	SHEET NUMBER
SEE CHART	GENERAL MARKET	1 OF 1

DOCUMENT STATUS	P1	RELEASE DATE	2020/09/15 20:43:15

FORMAT: IN-ACAD-tb-prod-C
REVISION: B
DATE: 2020/01/14