GlobTek, Inc.
www.globtek.com
186 Veterans Drive,
Northvale, NJ 07647
Tel. (201) 784-1000
Fax (201) 784-0111

Drawing Title: GTM96180-1817.9-5.9-T2, ICT / ITE / Medical Power Supply/Class 2/Household Power Supply, Efficiency Level: USA DOE Level VI / Eco-design Directive 2009/125/EC, (EU) 2019/1782, Case Color/Style: GlobTek Black, Desktop/External, Regulated Switchmode AC-DC Power Supply AC Adaptor, Input Rating: 100-240V~, 50-60 Hz, IEC 60320/C8 , Output Rating: 18W, 12.0V@1.5A, Output Configuration: 1200 mm, 16/2 Cond, Round Black, T-plug system (includes 5.5x2.5, 5.5x2.1, 3.5x1.3mm plugs in each kit), Ferrite: None, GlobTek Black, GT Cord # C4257, Pin Out: Polarity Configuration T00 All plugs are Medical Grade, Locking, Polarized once installed, and single use only. Product demonstration link: https://en.globtek.com/news/t00-changeable-output-plug-system-for-power-supplies MOLDED CONNECTORS AVAILABLE, Blades/Input Cord: Not Applicable, Approvals: IP42; CB 62368; CB 60950; LPS 62368; 230V CoC Tier 2; EAC; UKCA; NrCAN (9V only); UL 1310; ETL 62368; Conforms to 62368-1; Morocco; S-Mark 62368; IRAM; cETLus 60601-1 3rd; CE; China RoHS; Level VI; LPS 60950; RoHS; Ukraine; VCCI; WEEE; FCC; CAN ICES-3; CB61558-2-16; RCM; S-Mark 60950; ETL; Double Insulation; CCC; CE; CB 60335; cETLus UL1310; Fuse 60335; Fuse 60335; PSE; PSE; PSE; CB 60601-1;	
Model No. GTM96180-1817.9-5.9-T2	
Part No./Ordering No. TR9KE1500T00-IMR6B	Rev D

In Addition to GlobTek Inc.'s renewed ISO9001:2015 - Quality Management System Certification, GlobTek Inc. is now certified to:

ISO13485:2016 - Medical Devices Quality Management System Certification
ISO14001:2015 - Environmental Management System Certification

ISO Certificates are available online at https://www.globtek.com/iso-certificates/

The acceptance of this specification and use of the product described in this document indicates the acceptance and binding of the customer to Globtek TERMS AND CONDITIONS (attached to the end of this document), which supersede all other agreements, terms, and conditions (https://en.globtek.com/terms-and-conditions/).

The purchaser of this product (Customer) agrees that it is their sole responsibility to determine suitability/fitness of the product described in this specification for their application and to take precautions for protection against any hazards attendant to the handling and use of the product.

Footnote:

GlobTek Inc. will not be liable for the safety and performance of these power supplies/battery packs if unauthorized access and repair occurs. End user should consult applicable UL, CSA or EN standards for proper installation instruction.

Limitation of Use:

GlobTek products are intended for use with commercial, medical, and/or industrial equipment only. GlobTek product are not authorized for use as mission critical components in life support hazardous environment, nuclear or aircraft applications without prior written approval from the CEO of GlobTek Inc.
Contents of this document are subject to change without prior notice.

Customer Approval of Specification:

Please approve, sign and send back to GlobTek so we can complete order processing.
A delay in receipt of this form will delay delivery schedule.

Company Name:	Customer P/N:
Quote Number:	Date:
Authorized Representative Name:	Authorized Representative Signature:

PROPRIETARY INFORMATION
PROPRIETARY OF GLOBTEK, INC. ANY REPRODUCTION, DISCLOSURE OR USE OF THIS DRAWING, IN WHOLE OR IN PART, IS HEREBY PROHIBITED EXCEPT AS SPECIFIED IN WRITING BY GLOBTEK, INC. © GlobTek, Inc. 2016 - 2022
guest /08/31/2022 7:00:57 PM CLONED FROM TR9CI750CCP-N(RVB)

GlobTek, Inc.
www.globtek.com
186 Veterans Drive,
Northvale, NJ 07647
Tel. (201) 784-1000
Fax (201) 784-0111

Drawing Title: GTM96180-1817.9-5.9-T2, ICT / ITE / Medical Power Supply/Class 2/Household Power Supply, Efficiency Level: USA DOE Level VI / Eco-design Directive 2009/125/EC, (EU) 2019/1782, Case Color/Style: GlobTek Black, Desktop/External, Regulated Switchmode AC-DC Power Supply AC Adaptor, Input Rating: 100-240V~, 50-60 Hz, IEC 60320/C8 , Output Rating: 18W, 12.0V@1.5A, Output Configuration: 1200 mm, 16/2 Cond, Round Black, T-plug system (includes 5.5x2.5, 5.5x2.1, 3.5x1.3mm plugs in each kit), Ferrite: None, GlobTek Black, GT Cord # C4257, Pin Out: Polarity Configuration T00 All plugs are Medical Grade, Locking, Polarized once installed, and single use only. Product demonstration link: https://en.globtek.com/news/t00-changeable-output-plug-system-for-power-supplies MOLDED CONNECTORS AVAILABLE, Blades/Input Cord: Not Applicable, Approvals: IP42; CB 62368; CB 60950; LPS 62368; 230V CoC Tier 2; EAC; UKCA; NrCAN (9V only); UL 1310; ETL 62368; Conforms to 62368-1; Morocco; S-Mark 62368; IRAM; cETLus 60601-1 3rd; CE; China RoHS; Level VI; LPS 60950; RoHS; Ukraine; VCCI; WEEE; FCC; CAN ICES-3; CB61558-2-16; RCM; S-Mark 60950; ETL; Double Insulation; CCC; CE; CB 60335; cETLus UL1310; Fuse 60335; Fuse 60335; PSE; PSE; PSE; CB 60601-1;

Model No. GTM96180-1817.9-5.9-T2

Part No./Ordering No. TR9KE1500T00-IMR6B Rev D

REVISION HISTORY

REV	DESCRIPTION	SUB	DATE	APPROVED
D	Update model from GTM96180-18VV-T3 to GTM96180-18VV-T2	rchiu	06/02/2017	QA
C	Add double insulation to approvals	QA	12/06/2016	QA
B	Update Polarity configuration on Manual instruction and O/P cord	QA	11/03/2016	QA
A	Initial release.	rchiu	10/06/2016	QA

POWER SUPPLY INFORMATION

TYPE:	Desktop/External
TECHNOLOGY:	Regulated Switchmode AC-DC Power Supply AC Adaptor
CASE COLOR:	GlobTek Black
NAMEPLATE RATED INPUT:	100-240V~, 50-60 Hz, 0.6 A
INPUT CONFIG:	IEC 60320/C8
WATTS:	18.0
VOLTS OUT:	12.0
CURRENT OUT (Amps):	1.5
BLADE/CORD INCLUDED:	N/A Not Applicable
BLADE/CORD INSTALLED:	N/A :Not Applicable
INGRESS PROTECTION:	IP42
GROUNDING CONFIGURATION:	(F1) Class II / Double Insulated
EFFICIENCY LEVEL:	USA DOE Level VI / Eco-design Directive 2009/125/EC, (EU) 2019/1782 - Europe Code of Conduct on Energy Efficiency of External Power Supplies - Version 5
OUTPUT CONFIGURATION:	1200 mm, 16/2 Cond, Round Black, T-plug system (includes 5.5x2.5, 5.5x2.1, 3.5x1.3mm plugs in each kit), Ferrite: None, GlobTek Black, GT Cord # C4257
OVERMOLDED:	Yes
OUTPUT CONNECTOR GENDER:	not applicable
CONNECTOR PIN OUT:	Polarity Configuration T00 All plugs are Medical Grade, Locking, Polarized once installed, and single use only. Product demonstration link: https://en.globtek.com/news/t00-changeable-output-plug-system-for-power-supplies MOLDED CONNECTORS AVAILABLE
LABEL SPECS:	Standard GT,L-1186
SPECIAL BARCODE LABEL MATERIAL:	No
PACK SPEC:	Packing for DT plug model with T00 plug and manual
USER MANUAL:	809-DESKTOPUSERMANUAL on A4 paper

PROPRIETARY INFORMATION
PROPRIETARY OF GLOBTEK, INC. ANY REPRODUCTION, DISCLOSURE OR USE OF THIS DRAWING, IN WHOLE OR IN PART, IS HEREBY PROHIBITED EXCEPT AS SPECIFIED IN WRITING BY GLOBTEK, INC. © GlobTek, Inc. 2016 - 2022
guest /08/31/2022 7:00:57 PM CLONED FROM TR9CI750CCP-N(RVB)

GlobTek, Inc.
www.globtek.com
186 Veterans Drive,
Northvale, NJ 07647
Tel. (201) 784-1000
Fax (201) 784-0111

Drawing Title: GTM96180-1817.9-5.9-T2, ICT / ITE / Medical Power Supply/Class 2/Household Power Supply, Efficiency Level: USA DOE Level VI / Eco-design Directive 2009/125/EC, (EU) 2019/1782, Case Color/Style: GlobTek Black, Desktop/External, Regulated Switchmode AC-DC Power Supply AC Adaptor, Input Rating: 100-240V~, 50-60 Hz, IEC 60320/C8 , Output Rating: 18W, 12.0V@1.5A, Output Configuration: 1200 mm, 16/2 Cond, Round Black, T-plug system (includes 5.5x2.5, 5.5x2.1, 3.5x1.3mm plugs in each kit), Ferrite: None, GlobTek Black, GT Cord # C4257, Pin Out: Polarity Configuration T00 All plugs are Medical Grade, Locking, Polarized once installed, and single use only. Product demonstration link: https://en.globtek.com/news/t00-changeable-output-plug-system-for-power-supplies MOLDED CONNECTORS AVAILABLE, Blades/Input Cord: Not Applicable, Approvals: IP42; CB 62368; CB 60950; LPS 62368; 230V CoC Tier 2; EAC; UKCA; NrCAN (9V only); UL 1310; ETL 62368; Conforms to 62368-1; Morocco; S-Mark 62368; IRAM; cETLus 60601-1 3rd; CE; China RoHS; Level VI; LPS 60950; RoHS; Ukraine; VCCI; WEEE; FCC; CAN ICES-3; CB61558-2-16; RCM; S-Mark 60950; ETL; Double Insulation; CCC; CE; CB 60335; cETLus UL1310; Fuse 60335; Fuse 60335; PSE; PSE; PSE; CB 60601-1;	
Model No. GTM96180-1817.9-5.9-T2	
Part No./Ordering No. TR9KE1500T00-IMR6B	Rev D

Notes/Modifications/Customizations (notes in this section supersede the values shown in the standard spec):

DIMENSIONS ARE IN MM UNLESS SPECIFIED OTHERWISE.

Â 

Packing bag includes three tips.

1.T-C-12-S(R)Â

2.T-L-12-S(R)

3.T-K-11-S(R)

Â

PROPRIETARY INFORMATION

PROPRIETARY OF GLOBTEK, INC. ANY REPRODUCTION, DISCLOSURE OR USE OF THIS DRAWING, IN WHOLE OR IN PART, IS HEREBY PROHIBITED EXCEPT AS SPECIFIED IN WRITING BY GLOBTEK, INC. © GlobTek, Inc. 2016 - 2022

guest /08/31/2022 7:00:57 PM CLONED FROM TR9CI750CCP-N(RVB)

GlobTek, Inc.
www.globtek.com
186 Veterans Drive,
Northvale, NJ 07647
Tel. (201) 784-1000
Fax (201) 784-0111

Drawing Title: GTM96180-1817.9-5.9-T2, ICT / ITE / Medical Power Supply/Class 2/Household Power Supply, Efficiency Level: USA DOE Level VI / Eco-design Directive 2009/125/EC, (EU) 2019/1782, Case Color/Style: GlobTek Black, Desktop/External, Regulated Switchmode AC-DC Power Supply AC Adaptor, Input Rating: 100-240V~, 50-60 Hz, IEC 60320/C8 , Output Rating: 18W, 12.0V@1.5A, Output Configuration: 1200 mm, 16/2 Cond, Round Black, T-plug system (includes 5.5x2.5, 5.5x2.1, 3.5x1.3mm plugs in each kit), Ferrite: None, GlobTek Black, GT Cord # C4257, Pin Out: Polarity Configuration T00 All plugs are Medical Grade, Locking, Polarized once installed, and single use only. Product demonstration link: https://en.globtek.com/news/t00-changeable-output-plug-system-for-power-supplies MOLDED CONNECTORS AVAILABLE, Blades/Input Cord: Not Applicable, Approvals: IP42; CB 62368; CB 60950; LPS 62368; 230V CoC Tier 2; EAC; UKCA; NrCAN (9V only); UL 1310; ETL 62368; Conforms to 62368-1; Morocco; S-Mark 62368; IRAM; cETLus 60601-1 3rd; CE; China RoHS; Level VI; LPS 60950; RoHS; Ukraine; VCCI; WEEE; FCC; CAN ICES-3; CB61558-2-16; RCM; S-Mark 60950; ETL; Double Insulation; CCC; CE; CB 60335; cETLus UL1310; Fuse 60335; Fuse 60335; PSE; PSE; PSE; CB 60601-1;

Model No. GTM96180-1817.9-5.9-T2

Part No./Ordering No. TR9KE1500T00-IMR6B | Rev D

ELECTRICAL SPECIFICATIONS

Input

Input Voltage:	Specified: 90-264VAC, Nameplate: 100-240VAC 100% rated load current for 90-264VAC 85% rated load current for 85-264VAC 100% rated load current for 110-370VDC
Input Frequency:	Specified: 47-63Hz, Nameplate: 50-60Hz
No Load Input Power:	<75mW @ 230VAC (EU CoC Tier 2 compliant)
Inrush Current:	30A/60A maximum, cold start @ 115VAC/230VAC input, respectively
Efficiency:	DoE Level VI compliant, EU CoC Tier 2 compliant

Output

Turn-on Delay:	1 second max. @ nominal line and full load
Output Regulation	± 5% max. (measured at the output connector)
Line Regulation:	± 0.5% typ. (measured at the output connector, full load)
Ripple:	1% or 100mV, whichever is greater (measured using a 47µF low-ESR cap + 0.1µF ceramic capacitor, measured @ 20MHz BW, at output connector)
Transient Response:	5% max. deviation (with 40-70% load step), 1ms typ. recovery time
Hold-up Time:	8ms typ. @ nominal line and full load
Power On Indicator:	Green LED

Protections

Input Protection:	MOV transient suppressor, input line fusing
Over-Voltage Protection:	110-130% of nominal output voltage
Short-Circuit Protection:	Auto-restart
Over-Current Protection:	110-160% of rated output current (Current limit range is determined by normal output power rating, not derated power level)

Environmental

MTBF:	1,500,000 hours @ 25°C ambient, full load (Telcordia SR-332, Issue 3)
Operating Temperature:	-20°C to 40°C (full load) See derating table for output power capability at other temperatures. Extended low temperature range available as a custom option.

PROPRIETARY INFORMATION
PROPRIETARY OF GLOBTEK, INC. ANY REPRODUCTION, DISCLOSURE OR USE OF THIS DRAWING, IN WHOLE OR IN PART, IS HEREBY PROHIBITED EXCEPT AS SPECIFIED IN WRITING BY GLOBTEK, INC. © GlobTek, Inc. 2016 - 2022
guest /08/31/2022 7:00:57 PM CLONED FROM TR9CI750CCP-N(RVB)

Storage Temperature:	-30°C to 80°C
Humidity:	0% to 95% relative humidity, non-condensing
Altitude:	5000m
Ingress protection:	IP42 standard, IP52 available as a special option
Cooling:	Convection
RoHS:	Complies with EU 2011/65/EU amended by EU 2015/863 and China SJ/T 11363-2006

Safety

Dielectric Withstand Voltage:	4000VAC or 5656VDC from input to output 3000VAC or 4242VDC from input to earth (Class I models)
Touch Current:	Class I models: < 20uA Class II models: <75uA
Earth Leakage Current:	Class I models: <300uA Class II models: N/A
Isolation Options:	Floating output or Class I earthed output (desktop models)
Earth Continuity Test:	< 0.1 ohm between AC inlet earth pin and PCB termination point
Means of Protection (Primary-to-Secondary):	2 x MOPP
Compliant Standards:	See listing at the end of this document.

EMC

Applicable Standards:	Medical: EN60601-1-2, 4th edition Emissions: EN55032, EN61000-6-3, EN61000-6-4 Immunity: EN55024, EN61000-6-1, EN61000-6-2
Conducted Emissions:	Class B, FCC Part 15, Class B (with resistive load)
Radiated Emissions:	Class B, FCC Part 15, Class B (with resistive load)
Harmonic Current Voltage Distortion:	EN61000-3-2, Class A
Voltage Fluctuations/Flicker:	EN61000-3-3
Electrostatic Discharge (ESD) Immunity:	EN61000-4-2, 8KV contact discharge, 20KV air discharge
Radiated RF Immunity:	EN61000-4-3, 10V/m 80-1000MHz, 3V/m 1-2.7GHz, 80% 1KHz AM
EFT/Burst Immunity:	EN61000-4-4, 4KV/100kHz.
Line Surge Immunity:	EN61000-4-5, 2KV differential, 4KV common-mode
Conducted RF Immunity:	EN61000-4-6, 3VRMS, 80% 1KHz AM
Power Frequency Magnetic Field Immunity:	EN61000-4-8, 30A/m
Voltage Dip Immunity:	EN61000-4-11

Enclosure

Housing:	High impact plastic, 94V0 polycarbonate, non-vented
AC Input Mechanical Options:	Wall plug-in, changeable blades (Class II only) Desktop housing, extended housing: C6, C8, C14, or C18 IEC inlet (Class I or Class II)

PROPRIETARY INFORMATION

PROPRIETARY OF GLOBTEK, INC. ANY REPRODUCTION, DISCLOSURE OR USE OF THIS DRAWING, IN WHOLE OR IN PART, IS HEREBY PROHIBITED EXCEPT AS SPECIFIED IN WRITING BY GLOBTEK, INC. © GlobTek, Inc. 2016 - 2022

guest /08/31/2022 7:00:57 PM CLONED FROM TR9CI750CCP-N(RVB)

GlobTek, Inc.
www.globtek.com
186 Veterans Drive,
Northvale, NJ 07647
Tel. (201) 784-1000
Fax (201) 784-0111

Drawing Title: GTM96180-1817.9-5.9-T2, ICT / ITE / Medical Power Supply/Class 2/Household Power Supply, Efficiency Level: USA DOE Level VI / Eco-design Directive 2009/125/EC, (EU) 2019/1782, Case Color/Style: GlobTek Black, Desktop/External, Regulated Switchmode AC-DC Power Supply AC Adaptor, Input Rating: 100-240V~, 50-60 Hz, IEC 60320/C8 , Output Rating: 18W, 12.0V@1.5A, Output Configuration: 1200 mm, 16/2 Cond, Round Black, T-plug system (includes 5.5x2.5, 5.5x2.1, 3.5x1.3mm plugs in each kit), Ferrite: None, GlobTek Black, GT Cord # C4257, Pin Out: Polarity Configuration T00 All plugs are Medical Grade, Locking, Polarized once installed, and single use only. Product demonstration link: https://en.globtek.com/news/t00-changeable-output-plug-system-for-power-supplies MOLDED CONNECTORS AVAILABLE, Blades/Input Cord: Not Applicable, Approvals: IP42; CB 62368; CB 60950; LPS 62368; 230V CoC Tier 2; EAC; UKCA; NrCAN (9V only); UL 1310; ETL 62368; Conforms to 62368-1; Morocco; S-Mark 62368; IRAM; cETLus 60601-1 3rd; CE; China RoHS; Level VI; LPS 60950; RoHS; Ukraine; VCCI; WEEE; FCC; CAN ICES-3; CB61558-2-16; RCM; S-Mark 60950; ETL; Double Insulation; CCC; CE; CB 60335; cETLus UL1310; Fuse 60335; Fuse 60335; PSE; PSE; PSE; CB 60601-1;	
Model No. GTM96180-1817.9-5.9-T2	
Part No./Ordering No. TR9KE1500T00-IMR6B	Rev D

Markings: Label or laser printed

Special Options

1. Removal of LED (optional)
2. Custom cord-sets (custom cord and/or connector types). Note: 5VDC USB power supplies with Micro-B or Type-C connectors have a voltage regulation specification of ±8% (4.6V to 5.4V).
3. Custom markings
4. Short term output surge capability
5. Reduced leakage current versions (10uA max) for Type-CF medical applications and/or for AC noise sensitive equipment. (15W or less, 5 to 24V output voltage range.)
6. Tightened output voltage tolerance
7. Reduced output voltage ripple
8. Improved reliability PCB laminate with plated-through-holes for IPC610 Class 2 compliance
9. Custom housing colors
10. Quasi constant-current output for SLA (lead-acid) battery charging applications

TO ADDRESS SYSTEM-LEVEL EMI CONCERNS, FERRITE CHOKES/BEADS MAY BE ADDED/REVISED UPON REQUEST. A SAMPLE KIT OF GLOBTEK'S STANDARD FERRITES IS AVAILABLE UNDER GLOBTEK P/N: EMI-MITIGATION-KIT1

FOR ADDITIONAL INFORMATION, PLEASE READ OUR WHITE PAPER AT:
https://en.globtek.com/technical-articles/ferrite-kit-radiated-emi-suppression-kit-for-globtek-power-supplies-cable-assemblies

INGRESS PROTECTION: IP42

PROPRIETARY INFORMATION
PROPRIETARY OF GLOBTEK, INC. ANY REPRODUCTION, DISCLOSURE OR USE OF THIS DRAWING, IN WHOLE OR IN PART, IS HEREBY PROHIBITED EXCEPT AS SPECIFIED IN WRITING BY GLOBTEK, INC. © GlobTek, Inc. 2016 - 2022
guest /08/31/2022 7:00:57 PM CLONED FROM TR9CI750CCP-N(RVB)

GlobTek, Inc.
www.globtek.com
186 Veterans Drive,
Northvale, NJ 07647
Tel. (201) 784-1000
Fax (201) 784-0111

Drawing Title: GTM96180-1817.9-5.9-T2, ICT / ITE / Medical Power Supply/Class 2/Household Power Supply, Efficiency Level: USA DOE Level VI / Eco-design Directive 2009/125/EC, (EU) 2019/1782, Case Color/Style: GlobTek Black, Desktop/External, Regulated Switchmode AC-DC Power Supply AC Adaptor, Input Rating: 100-240V~, 50-60 Hz, IEC 60320/C8 , Output Rating: 18W, 12.0V@1.5A, Output Configuration: 1200 mm, 16/2 Cond, Round Black, T-plug system (includes 5.5x2.5, 5.5x2.1, 3.5x1.3mm plugs in each kit), Ferrite: None, GlobTek Black, GT Cord # C4257, Pin Out: Polarity Configuration T00 All plugs are Medical Grade, Locking, Polarized once installed, and single use only. Product demonstration link: https://en.globtek.com/news/t00-changeable-output-plug-system-for-power-supplies MOLDED CONNECTORS AVAILABLE, Blades/Input Cord: Not Applicable, Approvals: IP42; CB 62368; CB 60950; LPS 62368; 230V CoC Tier 2; EAC; UKCA; NrCAN (9V only); UL 1310; ETL 62368; Conforms to 62368-1; Morocco; S-Mark 62368; IRAM; cETLus 60601-1 3rd; CE; China RoHS; Level VI; LPS 60950; RoHS; Ukraine; VCCI; WEEE; FCC; CAN ICES-3; CB61558-2-16; RCM; S-Mark 60950; ETL; Double Insulation; CCC; CE; CB 60335; cETLus UL1310; Fuse 60335; Fuse 60335; PSE; PSE; PSE; CB 60601-1;

Model No. GTM96180-1817.9-5.9-T2

Part No./Ordering No. TR9KE1500T00-IMR6B | Rev D

3D File Download https://www.globtek.com/dl/GTM96180-T2.igs

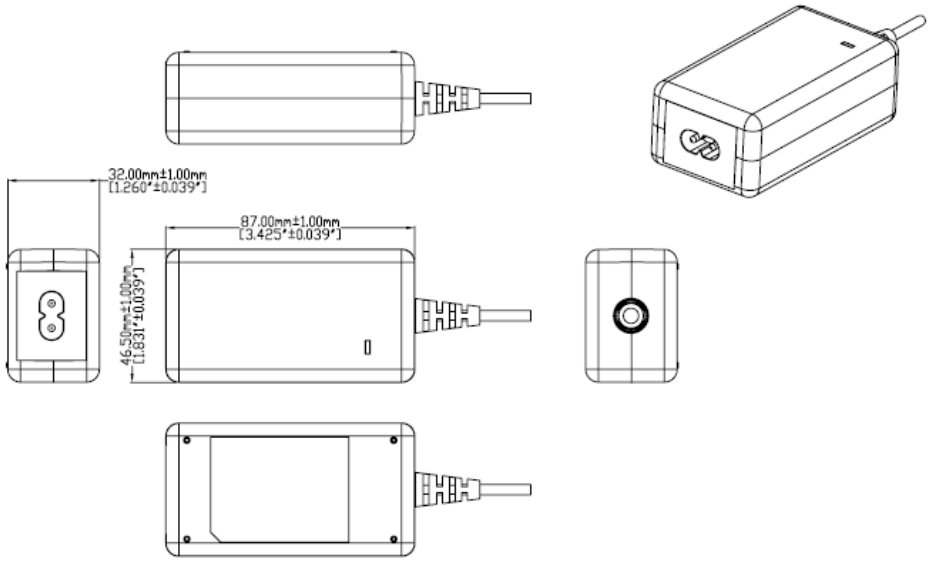

PROPRIETARY INFORMATION
PROPRIETARY OF GLOBTEK, INC. ANY REPRODUCTION, DISCLOSURE OR USE OF THIS DRAWING, IN WHOLE OR IN PART, IS HEREBY PROHIBITED EXCEPT AS SPECIFIED IN WRITING BY GLOBTEK, INC. © GlobTek, Inc. 2016 - 2022
guest /08/31/2022 7:00:57 PM CLONED FROM TR9CI750CCP-N(RVB)

GlobTek, Inc.
www.globtek.com
186 Veterans Drive,
Northvale, NJ 07647
Tel. (201) 784-1000
Fax (201) 784-0111

Drawing Title: GTM96180-1817.9-5.9-T2, ICT / ITE / Medical Power Supply/Class 2/Household Power Supply, Efficiency Level: USA DOE Level VI / Eco-design Directive 2009/125/EC, (EU) 2019/1782, Case Color/Style: GlobTek Black, Desktop/External, Regulated Switchmode AC-DC Power Supply AC Adaptor, Input Rating: 100-240V~, 50-60 Hz, IEC 60320/C8 , Output Rating: 18W, 12.0V@1.5A, Output Configuration: 1200 mm, 16/2 Cond, Round Black, T-plug system (includes 5.5x2.5, 5.5x2.1, 3.5x1.3mm plugs in each kit), Ferrite: None, GlobTek Black, GT Cord # C4257, Pin Out: Polarity Configuration T00 All plugs are Medical Grade, Locking, Polarized once installed, and single use only. Product demonstration link: https://en.globtek.com/news/t00-changeable-output-plug-system-for-power-supplies MOLDED CONNECTORS AVAILABLE, Blades/Input Cord: Not Applicable, Approvals: IP42; CB 62368; CB 60950; LPS 62368; 230V CoC Tier 2; EAC; UKCA; NrCAN (9V only); UL 1310; ETL 62368; Conforms to 62368-1; Morocco; S-Mark 62368; IRAM; cETLus 60601-1 3rd; CE; China RoHS; Level VI; LPS 60950; RoHS; Ukraine; VCCI; WEEE; FCC; CAN ICES-3; CB61558-2-16; RCM; S-Mark 60950; ETL; Double Insulation; CCC; CE; CB 60335; cETLus UL1310; Fuse 60335; Fuse 60335; PSE; PSE; PSE; CB 60601-1;

Model No. GTM96180-1817.9-5.9-T2

Part No./Ordering No. TR9KE1500T00-IMR6B | Rev D

DERATING CURVE

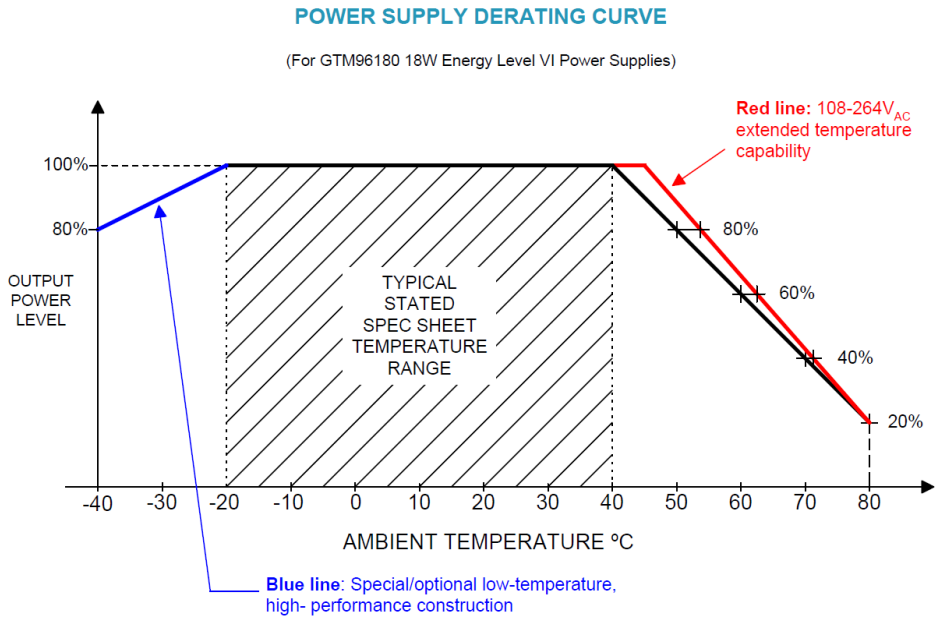

PROPRIETARY INFORMATION
PROPRIETARY OF GLOBTEK, INC. ANY REPRODUCTION, DISCLOSURE OR USE OF THIS DRAWING, IN WHOLE OR IN PART, IS HEREBY PROHIBITED EXCEPT AS SPECIFIED IN WRITING BY GLOBTEK, INC. © GlobTek, Inc. 2016 - 2022
guest /08/31/2022 7:00:57 PM CLONED FROM TR9CI750CCP-N(RVB)

GlobTek, Inc.
www.globtek.com
186 Veterans Drive,
Northvale, NJ 07647
Tel. (201) 784-1000
Fax (201) 784-0111

Drawing Title: GTM96180-1817.9-5.9-T2, ICT / ITE / Medical Power Supply/Class 2/Household Power Supply, Efficiency Level: USA DOE Level VI / Eco-design Directive 2009/125/EC, (EU) 2019/1782, Case Color/Style: GlobTek Black, Desktop/External, Regulated Switchmode AC-DC Power Supply AC Adaptor, Input Rating: 100-240V~, 50-60 Hz, IEC 60320/C8 , Output Rating: 18W, 12.0V@1.5A, Output Configuration: 1200 mm, 16/2 Cond, Round Black, T-plug system (includes 5.5x2.5, 5.5x2.1, 3.5x1.3mm plugs in each kit), Ferrite: None, GlobTek Black, GT Cord # C4257, Pin Out: Polarity Configuration T00 All plugs are Medical Grade, Locking, Polarized once installed, and single use only. Product demonstration link: https://en.globtek.com/news/t00-changeable-output-plug-system-for-power-supplies MOLDED CONNECTORS AVAILABLE, Blades/Input Cord: Not Applicable, Approvals: IP42; CB 62368; CB 60950; LPS 62368; 230V CoC Tier 2; EAC; UKCA; NrCAN (9V only); UL 1310; ETL 62368; Conforms to 62368-1; Morocco; S-Mark 62368; IRAM; cETLus 60601-1 3rd; CE; China RoHS; Level VI; LPS 60950; RoHS; Ukraine; VCCI; WEEE; FCC; CAN ICES-3; CB61558-2-16; RCM; S-Mark 60950; ETL; Double Insulation; CCC; CE; CB 60335; cETLus UL1310; Fuse 60335; Fuse 60335; PSE; PSE; PSE; CB 60601-1;

Model No. GTM96180-1817.9-5.9-T2

Part No./Ordering No. TR9KE1500T00-IMR6B | Rev D

INPUT CONFIGURATION

(F1) Class II / Double Insulated

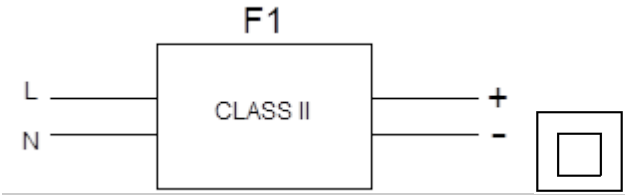

Alternate grounding configurations available upon request.

Blades/Cord Included:N/A:Not Applicable

Blades/Cord Installed:N/A:Not Applicable

IEC 60320/C8 AC Inlet connector, Class II, Non-Earth Ground (aka "Figure-8")

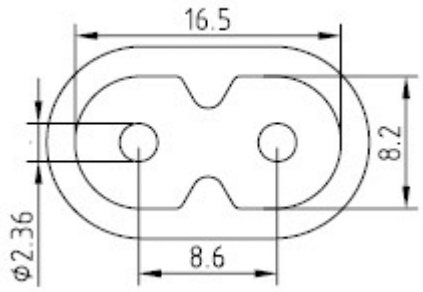

Mates with IEC 60320/C7 Plug

Below are standard cordsets which are "not included" (unless stated above); these may be purchased separately or packaged with the power supply. Please contact your Sales Engineer if the style required is not shown below. Many more available in different lengths, colors or cable material.

Standard International IEC 320/C7 Cordsets

Part Number	Type	Standard	Connector	Length (mm)	Length (feet)
2094112M703(R)	Argentina (Type I)	IRAM 2063	IEC 320/C7	2000	7
5014112M703A(R)	Australian (Type I)	AS 3112	IEC 320/C7	2000	7
207B4111M8703(R)	Brazil (Type N)	NBR14136	IEC 320/C7	1800	6
			IEC		

PROPRIETARY INFORMATION
PROPRIETARY OF GLOBTEK, INC. ANY REPRODUCTION, DISCLOSURE OR USE OF THIS DRAWING, IN WHOLE OR IN PART, IS HEREBY PROHIBITED EXCEPT AS SPECIFIED IN WRITING BY GLOBTEK, INC. © GlobTek, Inc. 2016 - 2022
guest /08/31/2022 7:00:57 PM CLONED FROM TR9CI750CCP-N(RVB)

4533501M8703(R)	China (Type A)	GB 2099.1	320/C7	1830	6
2074112M703A(R)	European (Type C)	CEE 7/16	IEC 320/C7	2000	7
2074112M703AEUSA(R)	European/South Africa Combo(Type C)	CEE 7/16	IEC 320/C7	2000	7
2084111M8703B(R)	India (Type D)	IS 1293	IEC 320/C7	1800	6
451J3401M8703(R)	Japan (Type A)	JIS 8303	IEC 320/C7	1830	6
2044112M703A(R)	Korea (Type C)	KS C8305	IEC 320/C7	2000	7
4511116F703A(R)	North America (Type A)	NEMA 1-15P	IEC 320/C7	1830	6
2084111M8703(R)	South Africa (Type M)	BS 546	IEC320/C7	1830	6
4033401M8703A(R)	Taiwan (Type A)	CNS690	IEC 320/C7	1830	6
6104112M703A(R)	UK, Hong Kong, Singapore, Gulf States (Type G)	BS1363	IEC 320/C7	2000	7
451G1116F703A(R)	Gulf States (Kuwait, Bahrain, Oman, Qatar, Saudi Arabia, Yemen and the United Arab Emirates (UAE)(Type A)	Nema 1-15P	IEC320/C7	1830	6
6303742M5703(R)	Thailand (Type C)	TIS 166-2549	IEC320/C7	2500	8

PROPRIETARY INFORMATION

PROPRIETARY OF GLOBTEK, INC. ANY REPRODUCTION, DISCLOSURE OR USE OF THIS DRAWING, IN WHOLE OR IN PART, IS HEREBY PROHIBITED EXCEPT AS SPECIFIED IN WRITING BY GLOBTEK, INC. © GlobTek, Inc. 2016 - 2022

guest /08/31/2022 7:00:57 PM CLONED FROM TR9CI750CCP-N(RVB)

GlobTek, Inc.
www.globtek.com
186 Veterans Drive,
Northvale, NJ 07647
Tel. (201) 784-1000
Fax (201) 784-0111

Drawing Title: GTM96180-1817.9-5.9-T2, ICT / ITE / Medical Power Supply/Class 2/Household Power Supply, Efficiency Level: USA DOE Level VI / Eco-design Directive 2009/125/EC, (EU) 2019/1782, Case Color/Style: GlobTek Black, Desktop/External, Regulated Switchmode AC-DC Power Supply AC Adaptor, Input Rating: 100-240V~, 50-60 Hz, IEC 60320/C8 , Output Rating: 18W, 12.0V@1.5A, Output Configuration: 1200 mm, 16/2 Cond, Round Black, T-plug system (includes 5.5x2.5, 5.5x2.1, 3.5x1.3mm plugs in each kit), Ferrite: None, GlobTek Black, GT Cord # C4257, Pin Out: Polarity Configuration T00 All plugs are Medical Grade, Locking, Polarized once installed, and single use only. Product demonstration link: https://en.globtek.com/news/t00-changeable-output-plug-system-for-power-supplies MOLDED CONNECTORS AVAILABLE, Blades/Input Cord: Not Applicable, Approvals: IP42; CB 62368; CB 60950; LPS 62368; 230V CoC Tier 2; EAC; UKCA; NrCAN (9V only); UL 1310; ETL 62368; Conforms to 62368-1; Morocco; S-Mark 62368; IRAM; cETLus 60601-1 3rd; CE; China RoHS; Level VI; LPS 60950; RoHS; Ukraine; VCCI; WEEE; FCC; CAN ICES-3; CB61558-2-16; RCM; S-Mark 60950; ETL; Double Insulation; CCC; CE; CB 60335; cETLus UL1310; Fuse 60335; Fuse 60335; PSE; PSE; PSE; CB 60601-1;

Model No. GTM96180-1817.9-5.9-T2

Part No./Ordering No. TR9KE1500T00-IMR6B | Rev D

OUTPUT CORD AND CONNECTOR: T00/C4257

ACTUAL CONNECTORS, OVERMOLDS, FERRITES MAY VARY SLIGHTLY FROM THE PICTURE BELOW

CABLE TYPE	Round Black
CABLE LENGTH (mm)	1200
CABLE TOLERANCE (mm)	± 50
WIRE GAUGE (AWG)	16
CONDUCTORS	2
HANK DIMENSION (mm)	80 ± 10
CABLE / CONNECTOR OVERMOLD COLOR	GlobTek Black
FERRITE TYPE / DIMENSION	None
FERRITE # OF TURNS(Definition)	N/A
FERRITE DIMENSION FROM STRAIN RELIEF	N/A
FERRITE DIMENSION FROM PLUG	N/A
PLUG TYPE	T-plug system (includes 5.5x2.5, 5.5x2.1, 3.5x1.3mm plugs in each kit)
OUTPUT CONNECTOR GENDER	not applicable
OVERMOLDED	Yes
OVER MOLD ORIENTATION	Straight
CONNECTOR PIN OUT:	Polarity Configuration T00 All plugs are Medical Grade, Locking, Polarized once installed, and single use only. Product demonstration link: https://en.globtek.com/news/t00-changeable-output-plug-system-for-power-supplies MOLDED CONNECTORS AVAILABLE
ADDITIONAL REQUIREMENTS	UL1310 Warning Label Up To 36 Volts with plugs

This novel system allows for rapid shipment of prototype samples or small quantities of common output voltage and current which can fullfill the needs of most common barrel plug specs. The table below explains the standard and non standard options available as part of this system. This system also allows for both Center Positive and Center Negative polarity.

The T00 plug and adapters are Medical Grade, single use only, Polarized after installation, and not removable without use of special tool.

Any of the below options, and more, are available as molded plugs from stock or special order. Please contact GlobTek for more information

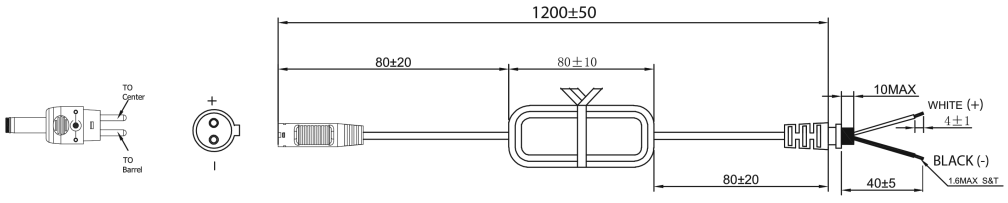

PROPRIETARY INFORMATION
PROPRIETARY OF GLOBTEK, INC. ANY REPRODUCTION, DISCLOSURE OR USE OF THIS DRAWING, IN WHOLE OR IN PART, IS HEREBY PROHIBITED EXCEPT AS SPECIFIED IN WRITING BY GLOBTEK, INC. © GlobTek, Inc. 2016 - 2022
guest /08/31/2022 7:00:57 PM CLONED FROM TR9CI750CCP-N(RVB)

GlobTek, Inc.
www.globtek.com
186 Veterans Drive,
Northvale, NJ 07647
Tel. (201) 784-1000
Fax (201) 784-0111

Drawing Title: GTM96180-1817.9-5.9-T2, ICT / ITE / Medical Power Supply/Class 2/Household Power Supply, Efficiency Level: USA DOE Level VI / Eco-design Directive 2009/125/EC, (EU) 2019/1782, Case Color/Style: GlobTek Black, Desktop/External, Regulated Switchmode AC-DC Power Supply AC Adaptor, Input Rating: 100-240V~, 50-60 Hz, IEC 60320/C8 , Output Rating: 18W, 12.0V@1.5A, Output Configuration: 1200 mm, 16/2 Cond, Round Black, T-plug system (includes 5.5x2.5, 5.5x2.1, 3.5x1.3mm plugs in each kit), Ferrite: None, GlobTek Black, GT Cord # C4257, Pin Out: Polarity Configuration T00 All plugs are Medical Grade, Locking, Polarized once installed, and single use only. Product demonstration link: https://en.globtek.com/news/t00-changeable-output-plug-system-for-power-supplies MOLDED CONNECTORS AVAILABLE, Blades/Input Cord: Not Applicable, Approvals: IP42; CB 62368; CB 60950; LPS 62368; 230V CoC Tier 2; EAC; UKCA; NrCAN (9V only); UL 1310; ETL 62368; Conforms to 62368-1; Morocco; S-Mark 62368; IRAM; cETLus 60601-1 3rd; CE; China RoHS; Level VI; LPS 60950; RoHS; Ukraine; VCCI; WEEE; FCC; CAN ICES-3; CB61558-2-16; RCM; S-Mark 60950; ETL; Double Insulation; CCC; CE; CB 60335; cETLus UL1310; Fuse 60335; Fuse 60335; PSE; PSE; PSE; CB 60601-1;	
Model No. GTM96180-1817.9-5.9-T2	
Part No./Ordering No. TR9KE1500T00-IMR6B	Rev D

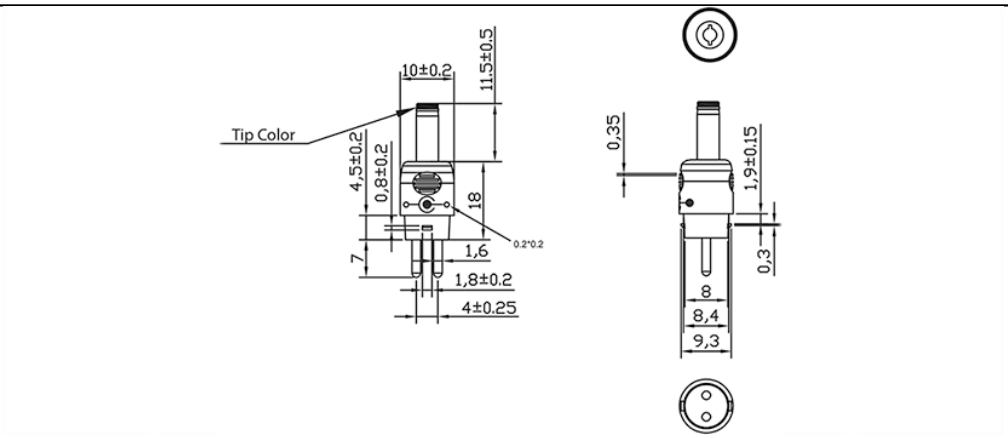

Option upon request: STRAIGHT Female Barrels are available for special order in any length between 9mm-14mm

This novel system allows for rapid shipment of prototype samples or small quantities of common output voltage and current which can fulfill the needs of most common barrel plug as well as male plug specs. The table explains the standard and non-standard options available as part of this system. This system also allows for both Center Positive and Center Negative
polarity.

The T00 plug and adapters are Medical Grade, single use only, Polarized after installation, and not removable without use of special tool.

Any of the below options, and more, are available as molded plugs from stock or special order. Please contact GlobTek for more information

ADDITIONAL OUTPUT PLUG OPTIONS ARE AVAILABLE AT https://www.globtek.com/connectors/
STANDARD PLUGS AND CONNECTORS CAN BE SEEN ONLINE AT https://www.globtek.com/connectors/
CALCULATE VOLTAGE REGULATION/DROP WITH OUR ONLINE CALCULATOR: https://en.globtek.com/output-cable-regulation-calculator/

PROPRIETARY INFORMATION
PROPRIETARY OF GLOBTEK, INC. ANY REPRODUCTION, DISCLOSURE OR USE OF THIS DRAWING, IN WHOLE OR IN PART, IS HEREBY PROHIBITED EXCEPT AS SPECIFIED IN WRITING BY GLOBTEK, INC. © GlobTek, Inc. 2016 - 2022
guest /08/31/2022 7:00:57 PM CLONED FROM TR9CI750CCP-N(RVB)

GlobTek, Inc.
www.globtek.com
186 Veterans Drive,
Northvale, NJ 07647
Tel. (201) 784-1000
Fax (201) 784-0111

Drawing Title: GTM96180-1817.9-5.9-T2, ICT / ITE / Medical Power Supply/Class 2/Household Power Supply, Efficiency Level: USA DOE Level VI / Eco-design Directive 2009/125/EC, (EU) 2019/1782, Case Color/Style: GlobTek Black, Desktop/External, Regulated Switchmode AC-DC Power Supply AC Adaptor, Input Rating: 100-240V~, 50-60 Hz, IEC 60320/C8 , Output Rating: 18W, 12.0V@1.5A, Output Configuration: 1200 mm, 16/2 Cond, Round Black, T-plug system (includes 5.5x2.5, 5.5x2.1, 3.5x1.3mm plugs in each kit), Ferrite: None, GlobTek Black, GT Cord # C4257, Pin Out: Polarity Configuration T00 All plugs are Medical Grade, Locking, Polarized once installed, and single use only. Product demonstration link: https://en.globtek.com/news/t00-changeable-output-plug-system-for-power-supplies MOLDED CONNECTORS AVAILABLE, Blades/Input Cord: Not Applicable, Approvals: IP42; CB 62368; CB 60950; LPS 62368; 230V CoC Tier 2; EAC; UKCA; NrCAN (9V only); UL 1310; ETL 62368; Conforms to 62368-1; Morocco; S-Mark 62368; IRAM; cETLus 60601-1 3rd; CE; China RoHS; Level VI; LPS 60950; RoHS; Ukraine; VCCI; WEEE; FCC; CAN ICES-3; CB61558-2-16; RCM; S-Mark 60950; ETL; Double Insulation; CCC; CE; CB 60335; cETLus UL1310; Fuse 60335; Fuse 60335; PSE; PSE; PSE; CB 60601-1;	
Model No. GTM96180-1817.9-5.9-T2	
Part No./Ordering No. TR9KE1500T00-IMR6B	Rev D

OUTPUT CONNECTOR HOOK UP

TO ADDRESS SYSTEM-LEVEL EMI CONCERNS, FERRITE CHOKES/BEADS MAY BE ADDED/REVISED UPON REQUEST. A SAMPLE KIT OF GLOBTEK'S STANDARD FERRITES IS AVAILABLE UNDER GLOBTEK P/N: EMI-MITIGATION-KIT1

FOR ADDITIONAL INFORMATION, PLEASE READ OUR WHITE PAPER AT:
https://en.globtek.com/technical-articles/ferrite-kit-radiated-emi-suppression-kit-for-globtek-power-supplies-cable-assemblies

PROPRIETARY INFORMATION
PROPRIETARY OF GLOBTEK, INC. ANY REPRODUCTION, DISCLOSURE OR USE OF THIS DRAWING, IN WHOLE OR IN PART, IS HEREBY PROHIBITED EXCEPT AS SPECIFIED IN WRITING BY GLOBTEK, INC. © GlobTek, Inc. 2016 - 2022
guest /08/31/2022 7:00:57 PM CLONED FROM TR9CI750CCP-N(RVB)

GlobTek, Inc. www.globtek.com 186 Veterans Drive, Northvale, NJ 07647 Tel. (201) 784-1000 Fax (201) 784-0111	Drawing Title: GTM96180-1817.9-5.9-T2, ICT / ITE / Medical Power Supply/Class 2/Household Power Supply, Efficiency Level: USA DOE Level VI / Eco-design Directive 2009/125/EC, (EU) 2019/1782, Case Color/Style: GlobTek Black, Desktop/External, Regulated Switchmode AC-DC Power Supply AC Adaptor, Input Rating: 100-240V~, 50-60 Hz, IEC 60320/C8 , Output Rating: 18W, 12.0V@1.5A, Output Configuration: 1200 mm, 16/2 Cond, Round Black, T-plug system (includes 5.5x2.5, 5.5x2.1, 3.5x1.3mm plugs in each kit), Ferrite: None, GlobTek Black, GT Cord # C4257, Pin Out: Polarity Configuration T00 All plugs are Medical Grade, Locking, Polarized once installed, and single use only. Product demonstration link: https://en.globtek.com/news/t00-changeable-output-plug-system-for-power-supplies MOLDED CONNECTORS AVAILABLE, Blades/Input Cord: Not Applicable, Approvals: IP42; CB 62368; CB 60950; LPS 62368; 230V CoC Tier 2; EAC; UKCA; NrCAN (9V only); UL 1310; ETL 62368; Conforms to 62368-1; Morocco; S-Mark 62368; IRAM; cETLus 60601-1 3rd; CE; China RoHS; Level VI; LPS 60950; RoHS; Ukraine; VCCI; WEEE; FCC; CAN ICES-3; CB61558-2-16; RCM; S-Mark 60950; ETL; Double Insulation; CCC; CE; CB 60335; cETLus UL1310; Fuse 60335; Fuse 60335; PSE; PSE; PSE; CB 60601-1;	
	Model No. GTM96180-1817.9-5.9-T2	
	Part No./Ordering No. TR9KE1500T00-IMR6B	Rev D

LABEL:L-1186

LABEL P/N:	Standard GT
MATERIAL:	Flat Thermal Transfer, Imprintable, Polyester Label and/or Pad Printed and/or Molded, and/or Laser Engraved in the case
BACKGROUND COLOR:	Black if housing is Black, White or Silver if housing is White or Gray.
TEXT COLOR:	White or Silver if label is Black Background for Black housing. Black if label is White or Silver background and Housing is White or Gray.
LABEL WIDTH (mm):	36.5
LABEL HEIGHT (mm):	48.5
SPECIAL BARCODE LABEL MATERIAL:	No

Below is the minimum information which will appear on the label. NOTE: in the logo area additional/actual positioning of symbols and text is subjected to change as per agency updates/requirements or additional model approvals become available.
Regulatory certifications/label markings may be in logo area on the label or molded into the case housing outside the label area.
Information will be shown via label and/or pad printed and/or molded and/or laser engraved in the case. * Date code markings at GlobTek option
.

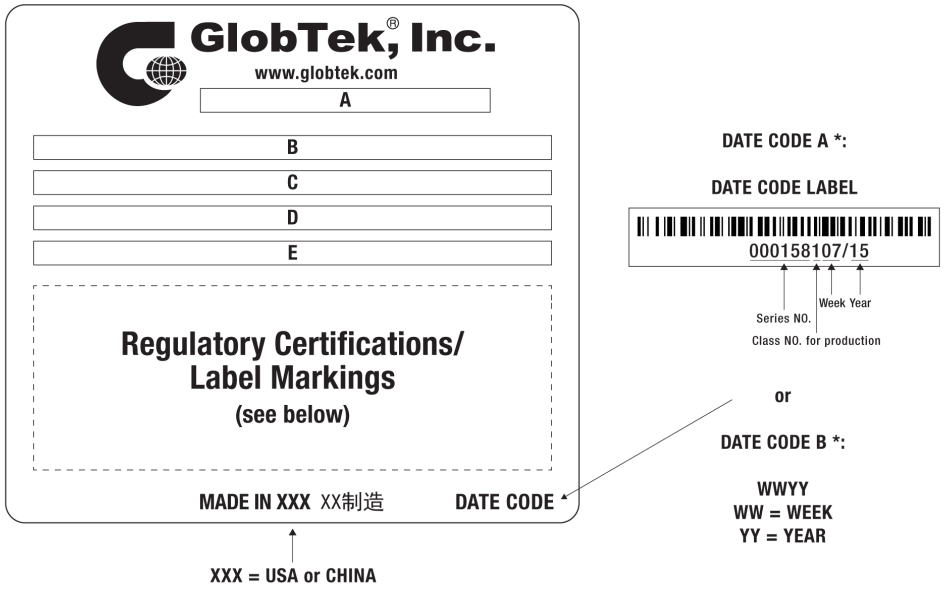

A=ICT / ITE / Medical Power Supply/Class 2/Household Power Supply
B=P/N: (料号) TR9KE1500T00-IMR6B
C=Model (型号) GTM96180-1817.9-5.9-T2
D=Input (输入)100-240V~, 50-60 Hz, 0.6 A
E=Output (输出)12.0 V ⎓ 1.5 A, 18.0W

PROPRIETARY INFORMATION
PROPRIETARY OF GLOBTEK, INC. ANY REPRODUCTION, DISCLOSURE OR USE OF THIS DRAWING, IN WHOLE OR IN PART, IS HEREBY PROHIBITED EXCEPT AS SPECIFIED IN WRITING BY GLOBTEK, INC. © GlobTek, Inc. 2016 - 2022
guest /08/31/2022 7:00:57 PM CLONED FROM TR9CI750CCP-N(RVB)

GlobTek, Inc.
www.globtek.com
186 Veterans Drive,
Northvale, NJ 07647
Tel. (201) 784-1000
Fax (201) 784-0111

Drawing Title: GTM96180-1817.9-5.9-T2, ICT / ITE / Medical Power Supply/Class 2/Household Power Supply, Efficiency Level: USA DOE Level VI / Eco-design Directive 2009/125/EC, (EU) 2019/1782, Case Color/Style: GlobTek Black, Desktop/External, Regulated Switchmode AC-DC Power Supply AC Adaptor, Input Rating: 100-240V~, 50-60 Hz, IEC 60320/C8 , Output Rating: 18W, 12.0V@1.5A, Output Configuration: 1200 mm, 16/2 Cond, Round Black, T-plug system (includes 5.5x2.5, 5.5x2.1, 3.5x1.3mm plugs in each kit), Ferrite: None, GlobTek Black, GT Cord # C4257, Pin Out: Polarity Configuration T00 All plugs are Medical Grade, Locking, Polarized once installed, and single use only. Product demonstration link: https://en.globtek.com/news/t00-changeable-output-plug-system-for-power-supplies MOLDED CONNECTORS AVAILABLE, Blades/Input Cord: Not Applicable, Approvals: IP42; CB 62368; CB 60950; LPS 62368; 230V CoC Tier 2; EAC; UKCA; NrCAN (9V only); UL 1310; ETL 62368; Conforms to 62368-1; Morocco; S-Mark 62368; IRAM; cETLus 60601-1 3rd; CE; China RoHS; Level VI; LPS 60950; RoHS; Ukraine; VCCI; WEEE; FCC; CAN ICES-3; CB61558-2-16; RCM; S-Mark 60950; ETL; Double Insulation; CCC; CE; CB 60335; cETLus UL1310; Fuse 60335; Fuse 60335; PSE; PSE; PSE; CB 60601-1;	
Model No. GTM96180-1817.9-5.9-T2	
Part No./Ordering No. TR9KE1500T00-IMR6B	Rev D

AGENCY ONLINE DOCUMENTS	http://www.globtek.info/certs/GTM96180-TZ/
CE EC-Declaration for Medical	http://globtek.force.com/models/ec_declaration_product?id=01ta0000007brpp&m=1
CE EC-Declaration for Industrial/Commercial/ITE	http://globtek.force.com/models/ec_declaration_product?id=01ta0000007brpp&i=2
CE EC-Declaration for Household	http://globtek.force.com/models/ec_declaration_product?id=01ta0000007brpp&h=2
UKCA-Declaration for Medical	http://globtek.force.com/models/ukca_declaration_product?id=01ta0000007brpp&m=1
UKCA-Declaration for Industrial/Commercial/ITE	http://globtek.force.com/models/ukca_declaration_product?id=01ta0000007brpp&i=2
UKCA-Declaration for Household	http://globtek.force.com/models/ukca_declaration_product?id=01ta0000007brpp&h=2
Morocco SDoC Declaration	https://globtek.secure.force.com/models/Morocco_SDoC_Declaration?id=a0Oa000000Olz12EAD
RoHS/RoHS3 Declaration	https://www.globtek.com/pdf/rohs_cert/01ta0000007brppAAA
REACH Declaration	https://www.globtek.com/pdf/iso_certificates/REACH.pdf
Conflict Minerals Declaration	https://www.globtek.com/pdf/conflict-minerals.pdf
Prop 65 Statement	https://en.globtek.com/prop-65-statement.pdf

IPXY rating is based on 3rd party testing and customers should check suitability and test system level IPXY rating before ordering.

Regulatory Certifications/Label Markings

Below follows a link to the latest regulatory certifications and marks for this specific product. National standards as well as certification schemes are constantly changing and so is the set of certification marks and symbols applicable to this product. Various standards, marks and symbols, and certificates are subject to change at any time without notice.

Additional standards or unique country certifications are available upon request. Please contact Globtek to request a quotation.

LATEST PRODUCT/MODEL CERTIFICATIONS:	https://www.globtek.com/datasheet/w71137
AGENCY ONLINE DOCUMENTS:	http://www.globtek.info/certs/GTM96180-TZ/



(F1) Class II / Double Insulated



Polarity Configuration T00 All plugs are Medical Grade, Locking, Polarized once installed, and single use only.
Product demonstration link: https://en.globtek.com/news/t00-changeable-output-plug-system-for-power-supplies
MOLDED CONNECTORS AVAILABLE

PROPRIETARY INFORMATION
PROPRIETARY OF GLOBTEK, INC. ANY REPRODUCTION, DISCLOSURE OR USE OF THIS DRAWING, IN WHOLE OR IN PART, IS HEREBY PROHIBITED EXCEPT AS SPECIFIED IN WRITING BY GLOBTEK, INC. © GlobTek, Inc. 2016 - 2022
guest /08/31/2022 7:00:57 PM CLONED FROM TR9CI750CCP-N(RVB)

GlobTek, Inc.
www.globtek.com
186 Veterans Drive,
Northvale, NJ 07647
Tel. (201) 784-1000
Fax (201) 784-0111

Drawing Title: GTM96180-1817.9-5.9-T2, ICT / ITE / Medical Power Supply/Class 2/Household Power Supply, Efficiency Level: USA DOE Level VI / Eco-design Directive 2009/125/EC, (EU) 2019/1782, Case Color/Style: GlobTek Black, Desktop/External, Regulated Switchmode AC-DC Power Supply AC Adaptor, Input Rating: 100-240V~, 50-60 Hz, IEC 60320/C8 , Output Rating: 18W, 12.0V@1.5A, Output Configuration: 1200 mm, 16/2 Cond, Round Black, T-plug system (includes 5.5x2.5, 5.5x2.1, 3.5x1.3mm plugs in each kit), Ferrite: None, GlobTek Black, GT Cord # C4257, Pin Out: Polarity Configuration T00 All plugs are Medical Grade, Locking, Polarized once installed, and single use only. Product demonstration link: https://en.globtek.com/news/t00-changeable-output-plug-system-for-power-supplies MOLDED CONNECTORS AVAILABLE, Blades/Input Cord: Not Applicable, Approvals: IP42; CB 62368; CB 60950; LPS 62368; 230V CoC Tier 2; EAC; UKCA; NrCAN (9V only); UL 1310; ETL 62368; Conforms to 62368-1; Morocco; S-Mark 62368; IRAM; cETLus 60601-1 3rd; CE; China RoHS; Level VI; LPS 60950; RoHS; Ukraine; VCCI; WEEE; FCC; CAN ICES-3; CB61558-2-16; RCM; S-Mark 60950; ETL; Double Insulation; CCC; CE; CB 60335; cETLus UL1310; Fuse 60335; Fuse 60335; PSE; PSE; PSE; CB 60601-1;

Model No. GTM96180-1817.9-5.9-T2

Part No./Ordering No. TR9KE1500T00-IMR6B | Rev D

PACKAGING

Packing Spec P/N:	Packing for DT plug model with T00 plug and manual
Box Qty:	60
Gift Box Size (mm):	147*100*33
Gift Box Color:	White
Master Carton Size (mm):	455 x 405 x 220
Master Carton Cubic Volume (m^3):	0.04
Master GW (Kg):	15.6 kg
BLADES INCLUDED:	N/A: Not Applicable
BLADE/CORD INSTALLED:	N/A: Not Applicable
USER MANUAL*:	809-DESKTOPUSERMANUAL on A4 paper
USER MANUAL WEB LINK:	https://en.globtek.com/pdf/809-DESKTOPUSERMANUAL.jpg

* This specification sheet is considered the user manual for all applications. It is expected that the buyer of this product will use it to formulate their own user manual for their end product and a user manual specifically for the power adapter is not usually required. If a user manual is not specifically listed above then none will be provided with this unit.

If specific packaging is required, this section must specify all requirements and note “no exceptions”. If this section does not specify packaging, it is subject to change without notice at GlobTek’s discretion

PROPRIETARY INFORMATION
PROPRIETARY OF GLOBTEK, INC. ANY REPRODUCTION, DISCLOSURE OR USE OF THIS DRAWING, IN WHOLE OR IN PART, IS HEREBY PROHIBITED EXCEPT AS SPECIFIED IN WRITING BY GLOBTEK, INC. © GlobTek, Inc. 2016 - 2022
guest /08/31/2022 7:00:57 PM CLONED FROM TR9CI750CCP-N(RVB)

GlobTek, Inc. www.globtek.com 186 Veterans Drive, Northvale, NJ 07647 Tel. (201) 784-1000 Fax (201) 784-0111	Drawing Title: GTM96180-1817.9-5.9-T2, ICT / ITE / Medical Power Supply/Class 2/Household Power Supply, Efficiency Level: USA DOE Level VI / Eco-design Directive 2009/125/EC, (EU) 2019/1782, Case Color/Style: GlobTek Black, Desktop/External, Regulated Switchmode AC-DC Power Supply AC Adaptor, Input Rating: 100-240V~, 50-60 Hz, IEC 60320/C8 , Output Rating: 18W, 12.0V@1.5A, Output Configuration: 1200 mm, 16/2 Cond, Round Black, T-plug system (includes 5.5x2.5, 5.5x2.1, 3.5x1.3mm plugs in each kit), Ferrite: None, GlobTek Black, GT Cord # C4257, Pin Out: Polarity Configuration T00 All plugs are Medical Grade, Locking, Polarized once installed, and single use only. Product demonstration link: https://en.globtek.com/news/t00-changeable-output-plug-system-for-power-supplies MOLDED CONNECTORS AVAILABLE, Blades/Input Cord: Not Applicable, Approvals: IP42; CB 62368; CB 60950; LPS 62368; 230V CoC Tier 2; EAC; UKCA; NrCAN (9V only); UL 1310; ETL 62368; Conforms to 62368-1; Morocco; S-Mark 62368; IRAM; cETLus 60601-1 3rd; CE; China RoHS; Level VI; LPS 60950; RoHS; Ukraine; VCCI; WEEE; FCC; CAN ICES-3; CB61558-2-16; RCM; S-Mark 60950; ETL; Double Insulation; CCC; CE; CB 60335; cETLus UL1310; Fuse 60335; Fuse 60335; PSE; PSE; PSE; CB 60601-1;	
	Model No. GTM96180-1817.9-5.9-T2	
	Part No./Ordering No. TR9KE1500T00-IMR6B	Rev D

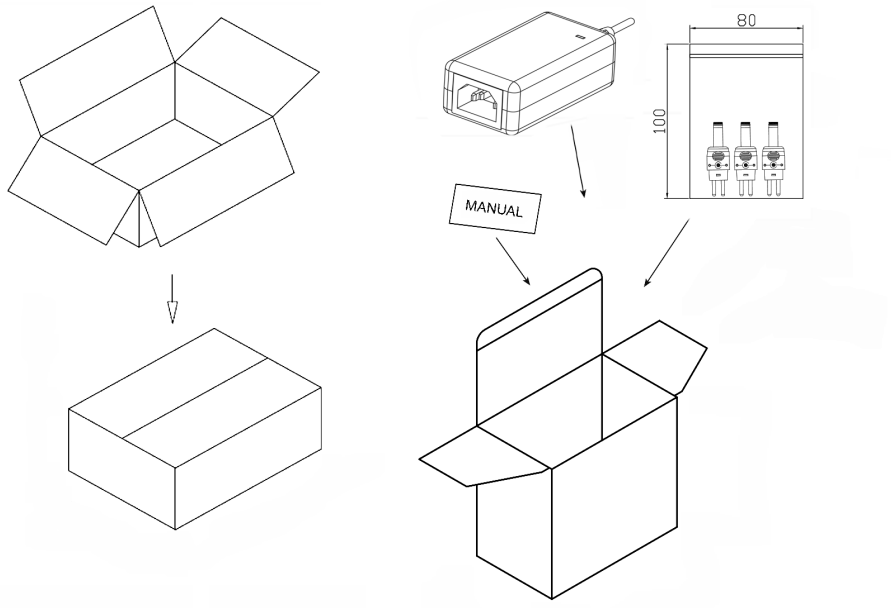

Manual for T00-plug:

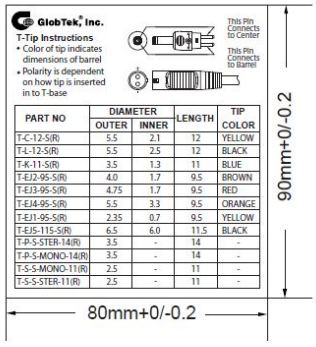

正面/SHEET A

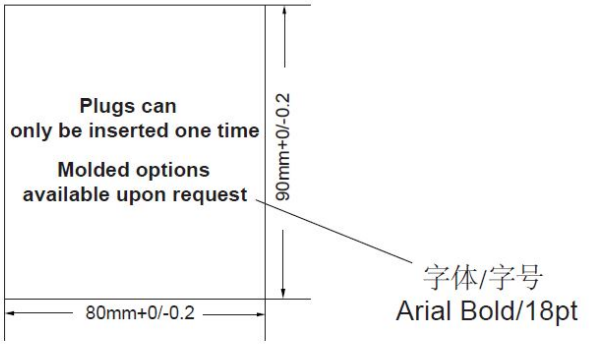

反面/SHEET B

PROPRIETARY INFORMATION
PROPRIETARY OF GLOBTEK, INC. ANY REPRODUCTION, DISCLOSURE OR USE OF THIS DRAWING, IN WHOLE OR IN PART, IS HEREBY PROHIBITED EXCEPT AS SPECIFIED IN WRITING BY GLOBTEK, INC. © GlobTek, Inc. 2016 - 2022
guest /08/31/2022 7:00:57 PM CLONED FROM TR9CI750CCP-N(RVB)

GlobTek, Inc.
www.globtek.com
186 Veterans Drive,
Northvale, NJ 07647
Tel. (201) 784-1000
Fax (201) 784-0111

Drawing Title: GTM96180-1817.9-5.9-T2, ICT / ITE / Medical Power Supply/Class 2/Household Power Supply, Efficiency Level: USA DOE Level VI / Eco-design Directive 2009/125/EC, (EU) 2019/1782, Case Color/Style: GlobTek Black, Desktop/External, Regulated Switchmode AC-DC Power Supply AC Adaptor, Input Rating: 100-240V~, 50-60 Hz, IEC 60320/C8 , Output Rating: 18W, 12.0V@1.5A, Output Configuration: 1200 mm, 16/2 Cond, Round Black, T-plug system (includes 5.5x2.5, 5.5x2.1, 3.5x1.3mm plugs in each kit), Ferrite: None, GlobTek Black, GT Cord # C4257, Pin Out: Polarity Configuration T00 All plugs are Medical Grade, Locking, Polarized once installed, and single use only. Product demonstration link: https://en.globtek.com/news/t00-changeable-output-plug-system-for-power-supplies MOLDED CONNECTORS AVAILABLE, Blades/Input Cord: Not Applicable, Approvals: IP42; CB 62368; CB 60950; LPS 62368; 230V CoC Tier 2; EAC; UKCA; NrCAN (9V only); UL 1310; ETL 62368; Conforms to 62368-1; Morocco; S-Mark 62368; IRAM; cETLus 60601-1 3rd; CE; China RoHS; Level VI; LPS 60950; RoHS; Ukraine; VCCI; WEEE; FCC; CAN ICES-3; CB61558-2-16; RCM; S-Mark 60950; ETL; Double Insulation; CCC; CE; CB 60335; cETLus UL1310; Fuse 60335; Fuse 60335; PSE; PSE; PSE; CB 60601-1;	
Model No. GTM96180-1817.9-5.9-T2	
Part No./Ordering No. TR9KE1500T00-IMR6B	Rev D

INSTRUCTIONS TO THE OEM SYSTEMS ENGINEER

It is the responsibility of the OEM systems engineer to provide the end system user instructions and warnings for the use of this product in the end system.

If an input cord is required for this product, AC Mains voltage should be provided to the power supply by a power supply cord approved to the national standards of the country in which it will be used.

This product is not designed to be repaired. No serviceable parts inside. A blown internal fuse is an indication of catastrophic failure of circuit component(s). If a Failure Analysis is required for a failed power supply/battery charger, please return the damaged unit to GlobTek for an accurate determination of the root cause of the failure.

EMC Compliance of the complete OEM product, including the GlobTek power supply/battery charger needs to be verified by the OEM systems engineer.

INSTRUCTION SHEET

PROPRIETARY INFORMATION
PROPRIETARY OF GLOBTEK, INC. ANY REPRODUCTION, DISCLOSURE OR USE OF THIS DRAWING, IN WHOLE OR IN PART, IS HEREBY PROHIBITED EXCEPT AS SPECIFIED IN WRITING BY GLOBTEK, INC. © GlobTek, Inc. 2016 - 2022
guest /08/31/2022 7:00:57 PM CLONED FROM TR9CI750CCP-N(RVB)